# Operator's Manual & Illustrated Parts List

# Model X700 Manure Spreader

ART'S WAY

**Art's Way Manufacturing**

690741

Issued November 2025

This symbol means ATTENTION! BECOME ALERT! YOUR SAFETY IS INVOLVED. The message that follows the symbol contains important information about your safety. Carefully read the message. Make sure you fully understand the causes of possible injury or death.

IF THIS MACHINE IS USED BY AN EMPLOYEE, IS LOANED, OR IS RENTED, MAKE SURE THAT THE OPERATOR UNDERSTANDS THE TWO INSTRUCTIONS BELOW.

**BEFORE THE OPERATOR STARTS THE ENGINE:**

GIVE INSTRUCTIONS TO THE OPERATOR ON SAFE AND CORRECT USE OF THE MACHINE.
MAKE SURE THE OPERATOR READS AND UNDERSTANDS THE OPERATOR'S MANUAL FOR THIS MACHINE.

**WARNING**

IMPROPER OPERATION OF THIS MACHINE CAN CAUSE INJURY OR DEATH.

**BEFORE STARTING THE ENGINE, DO THE FOLLOWING:**

1. READ THE OPERATOR'S MANUAL.

2. READ ALL SAFETY DECALS ON THE MACHINE.

3. CLEAR THE AREA OF OTHER PERSONS.

4. LEARN AND PRACTICE SAFE USE OF MACHINE CONTROLS IN A SAFE AND CLEAR AREA BEFORE YOU OPERATE THIS MACHINE ON A JOB SITE.

It is your responsibility to observe pertinent laws and regulations and to follow manufacturer's instructions on machine operation and maintenance.

See your Authorized Art's Way Manufacturing dealer or Art's Way Manufacturing for additional operator's manuals, illustrated parts catalogs, and service manuals.

# TO THE OWNER

Congratulations on the purchase of your new Art's Way Manure Spreader. You have selected a top quality machine that is designed and built with pride to ensure you have many years of efficient and reliable service.

Many people have worked on the design, production, and delivery of this Manure Spreader. The information in this manual is based on the knowledge, study, and experience through years of specializing in the manufacturing of farm machinery. This manual is designed to provide you with important information regarding safety, maintenance, and machine operation so you can and will get the best possible performance from your Manure Spreader.

Even if you are an experienced operator of this or similar equipment, we ask that you read this manual before operating this Manure Spreader. The way you operate, adjust, and maintain this unit will have much to do with its successful performance. Any further questions you may have about this product of Art's Way equipment should be directed to your local Art's Way dealer or to Art's Way Manufacturing Armstrong, Iowa, 50514, (712) 208-8467.

## SPECIFICATIONS AND DESIGN ARE SUBJECT TO CHANGE WITHOUT NOTICE

Art's Way Manufacturing is continually making product improvements. In doing so, we reserve the right to make changes and/or add improvements to our products without obligation for the equipment previously sold.

Modifications to this Manure Spreader may affect the performance, function, and safety of its operation. Therefore, no modifications are to be made without the written permission of Art's Way Manufacturing Any modification made without the written permission of Art's Way Manufacturing shall void the warranty of this product.

In the interest of continued safe operation of this Manure Spreader, pay particular attention to the safety alert symbol(s) throughout this manual.

## Art's Way Manufacturing STATEMENT OF PRODUCT LIABILITY

Art's Way Manufacturing recognizes its responsibility to provide customers with a safe and efficient product. Art's Way Manufacturing, attempts to design and manufacture its products in accordance with all accepted engineering practices effective at the date of design. This statement should not be interpreted to mean that our products will protect against the user's own carelessness or failure to follow common safety practices nor will Art's Way Manufacturing, be liable for any such act. In addition, Art's Way Manufacturing, assumes no liability for any altered product or any modified product by users or anyone other than an authorized dealer.

## LIMITATIONS OF THIS MANUAL

This manual contains operating instructions for your X700 Manure Spreader only. Any mention of other machinery in this manual other than the X700 Manure Spreader is for reference only. This manual does not replace nor is it to be used for any machinery that may be attached to or used in conjunction with the X700 Manure Spreader.

# PARTS & SERVICE

As the purchaser of your new spreader, it is very important to consider the following factors:

**A. Original Quality**

**B. Availability of Service Parts**

**C. Availability of Adequate Service Facilities**

Art's Way Manufacturing has an excellent dealership network ready to answer any questions you may have about your spreader. Parts for your machine may be ordered through our dealers. When placing a parts order, please have the **model** and **serial number** ready. This will allow the dealer to fill your order as quickly as possible.

For your convenience, we have provided this space for you to record your model number, serial number, and the date of purchase, as well as your dealer's name and address.

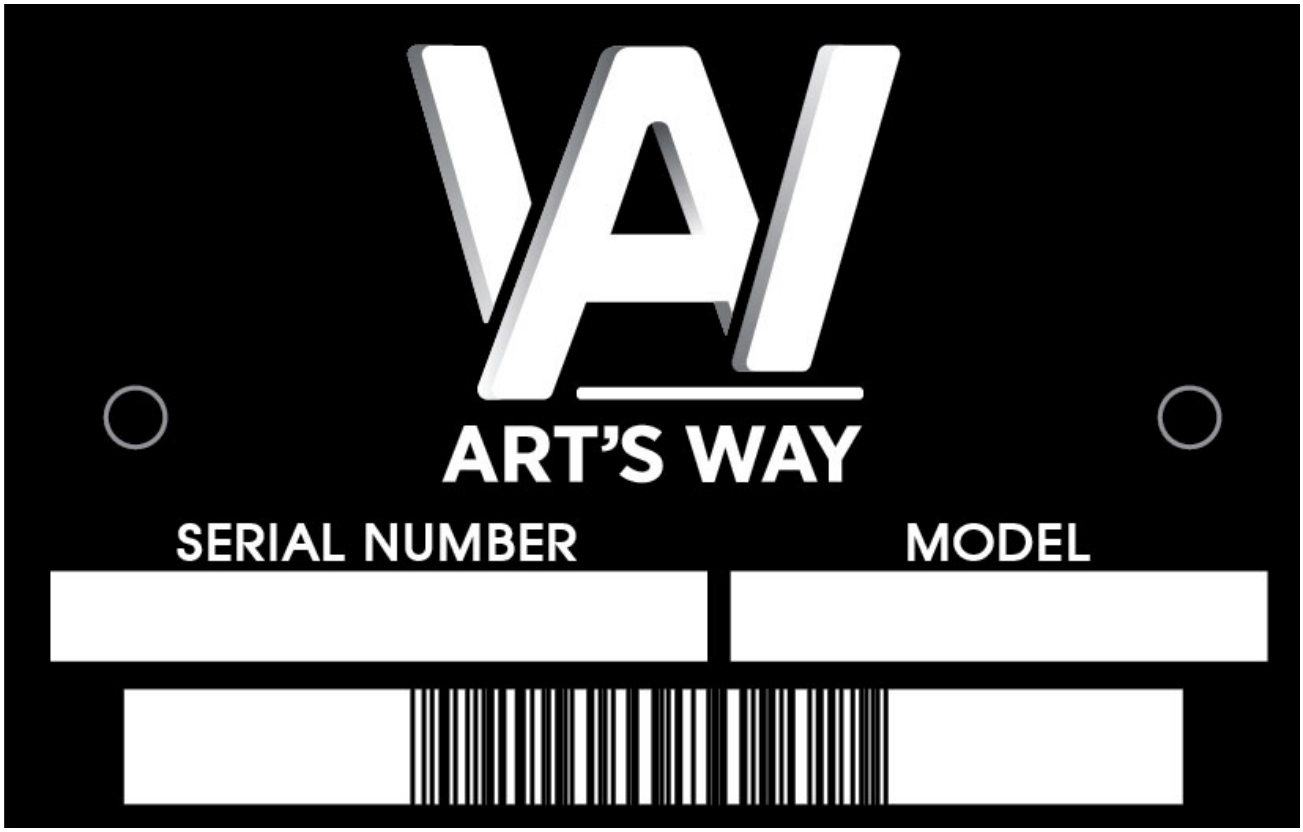

# TABLE OF CONTENTS

TO THE OWNER 1
SPECIFICATIONS AND DESIGN ARE SUBJECT TO CHANGE WITHOUT NOTICE 1
ART'S WAY MANUFACTURING STATEMENT OF PRODUCT LIABILITY 1
IMPORTANT WARRANTY INFORMATION 1
LIMITATIONS OF THIS MANUAL 1
PARTS & SERVICE 2
TABLE OF CONTENTS 3-5
SAFETY FIRST 7
NOTICES OF DANGER, WARNING, AND CAUTION 7
SAFETY INSTRUCTIONS 8
GENERAL 8
BEFORE OPERATING 9
DURING OPERATION 9
MAINTENANCE SAFETY 9
HYDRAULIC SAFETY 10
TRANSPORTATION SAFETY 10
STORAGE SAFETY 10
TIRE SAFETY 11
ASSEMBLY SAFETY 11

## TABLE OF CONTENTS


| NAME | PAGE |
|---|---|
| ~~~~~OPERATOR'S INSTRUCTIONS: MANURE SPREADER~~~~~ | 13 |
| SAFETY | 14 |
| PRE-OPERATION | 19 |
| LUBRICATION | 20 |
| INSPECTION & ADJUSTMENTS | 21 |
| OPERATION | 24 |
| DEALER SETUP | 26 |
| TORQUE VALUES | 27 |
| ~~~~~ILLUSTRATED PARTS LIST: MANURE SPREADER~~~~~ | 29 |
| HYDRAULICS ASSEMBLY | 30 |
| MANIFOLD ASSEMBLY | 32 |
| HYDRAULICS DIAGRAM | 34 |
| RUNNING GEAR ASSEMBLY | 36 |
| HUB ASSEMBLY | 38 |
| TONGUE ASSEMBLY | 40 |
| DRIVELINE ASSEMBLY | 42 |
| SHAFT ASSEMBLY (H160073) | 44 |
| SHAFT ASSEMBLY (H160105) (21 SPLINE) | 46 |
| SHAFT ASSEMBLY (H160106) (20 SPLINE) | 48 |
| GREASE ASSEMBLY | 50 |
| MAIN FLOOR ASSEMBLY | 52 |
| REAR GANG ASSEMBLY | 54 |
| GEARBOX ASSEMBLY (HO74-01-5069) | 56 |
| LIGHTS ASSEMBLY | 58 |
| LIGHTS DIAGRAM | 60 |
| WHEEL ASSEMBLY (USED MILITARY) | 62 |
| WHEEL ASSEMBLY (RH GOODYEAR FLOATATION 690623) | 64 |
| WHEEL ASSEMBLY (LH GOODYEAR FLOATATION 690624) | 65 |
| WHEEL ASSEMBLY (RH BKT FLOATATION 690621) | 66 |
| WHEEL ASSEMBLY (LH BKT FLOATATION 690622) | 67 |
| APRON CHAIN ASSEMBLY | 68 |
| SLOP GATE ASSEMBLY | 70 |
| FLASHING ASSEMBLY | 72 |
| BEATERS ASSEMBLY | 74 |
| BEATERS ASSEMBLY (H140503) (GEN 1) | 76 |
| BEATERS ASSEMBLY (H140503) (GEN 2) | 78 |
| BEATER GEARS ASSEMBLY (H14936) | 80 |
| LITTER KIT (OPTIONAL) (88C) | 82 |
| SHAFT ASSEMBLY (H140049) | 84 |
| ROCK GUARD ASSEMBLY | 86 |
| SHIELDS ASSEMBLY | 88 |

## TABLE OF CONTENTS


| | |
|---|---|
| MANUAL ASSEMBLY | 90 |
| DECALS ASSEMBLY | 92 |
| SCALE ASSEMBLY (ALL) | 94 |
| SCALE ASSEMBLY (RAVEN ONLY) | 95 |
| SCALE DIAGRAM (GT400) | 96 |
| SCALE DIAGRAM (NT560) | 97 |
| SCALE DIAGRAM (RAVEN RCM-LVL3 ISOBUS) | 98 |
| SCALE DIAGRAM (RAVEN ISOBUS CR7 INDICATOR & GPS) | 99 |

# WARRANTY

Warranty

For full warranty information please visit https://artsway.com/resources/warranty/ for the most up-to-date warranty policy and information on filing a claim.

To be eligible for warranty, each new product must be registered with Art's Way Mfg. within 30 days of delivery to the original purchaser.

Warranty claims must be submitted no later than 30 days from the date that the defect or improper workmanship was, or should have been, diagnosed/repaired. If defective date is less than 30 days away from end of warranty period, proof must be submitted with date of work completed.

# SAFETY FIRST

***SAFETY INSTRUCTIONS***

"A careful operator is the best insurance against an accident." Quote from the National Safety Council.

Most accidents can be prevented if the operator:

1. Fully understands how the machine functions.
2. Can anticipate situations which may produce problems.
3. Can make necessary corrections before problems develop.

**THIS SYMBOL MEANS ATTENTION!**

**BECOME ALERT!**

**YOUR SAFETY IS INVOLVED!**

**- Universal Safety Alert Symbol**

The American Society of Agricultural Engineers has adopted the Universal Safety Alert Symbol as a way to identify areas of potential danger if the equipment is not operated correctly. Please be alert whenever you see this symbol in the manuals or on your spreader.

Art's Way Manufacturing strives to make our equipment as safe as possible. The Art's Way X700 Manure Spreader conforms to applicable safety standards at the time of manufacturing. A safety conscious equipment operator makes an effective accident-prevention program complete.

Safety features and instructions for the spreader are detailed in the Safety Guidelines section of this Operator's Manual. It is the responsibility of the owner to ensure that all operators read and understand the manual before they are allowed to operate the Spreader. (Occupational Safety and Health Administration (OSHA) regulations 1928.57).

**NOTICES OF DANGER, WARNING, AND CAUTION**

Signal Words: Note the use of signal words **DANGER**, **WARNING**, and **CAUTION** on the spreader and in this manual. The appropriate signal word for each has been selected using the following guidelines:

**⚠ DANGER**

Indicates a hazardous situation which, if not avoided, will result in death or serious injury.

**⚠ WARNING**

Indicates a hazardous situation which, if not avoided, could result in death or serious injury.

**⚠ CAUTION**

Indicates a potentially hazardous situation which, if not avoided, could result in minor or moderate injury.

***NOTICE***

NOTICE is used to address practices not related to physical injury.

***SAFETY INSTRUCTIONS***

Safety instructions (or equivalent) signs indicate specific safety-related instructions or procedures.

**Note**: Contains additional information important to a procedure and will be found within the regular text body of this manual.

# SAFETY INSTRUCTIONS

## GENERAL

Most work related accidents are caused by failure to observe basic safety rules or precautions. An accident can often be avoided by recognizing potentially hazardous situations before an accident occurs. As you operate and maintain the Spreader you must be alert to potential hazards. You should also have the necessary training, skills, and tools to perform any assembly procedure.

**Improper operation and/or maintenance of this unit could cause a dangerous situation that results in injury or death.**

**Do not use this unit until you read and understand the information contained in this manual. Do not use this equipment for anything other than its intended purpose.**

Safety precautions and warnings are provided in this manual and on the unit. If these hazard warnings are not heeded, bodily injury or death could occur to you or to other persons.

**Art's Way Manufacturing cannot anticipate every possible circumstance that might involve a potential hazard. The warnings in this manual and on the product are, therefore, not all-inclusive. If a method of operation not specifically recommended by us is used, you must satisfy yourself that it is safe for you and for others. You should also ensure that the unit will not be damaged or be made unsafe by the methods that you choose.**

The information, specifications, and illustrations in this manual are based on the information that was available at the time this material was written and can change at any time.

## Safety Alert Symbols

This is the safety alert symbol. It is used to alert you to potential personal injury hazards. Obey all safety messages that follow this symbol to avoid possible injury or death.

This manual contains DANGERS, WARNINGS, CAUTIONS, NOTICES, SAFETY INSTRUCTIONS, and NOTES which must be followed to prevent the possibility of improper service, damage to the equipment, personal injury, or death. The following key words call the readers attention to potential hazards.

Hazards are identified by the "Safety Alert Symbol" and followed by a signal word such as "DANGER", "WARNING", or "CAUTION".

***SAFETY INSTRUCTIONS***

**Remember:**
**"The Best Operator is a Safe Operator"**

**CAUTION**

**Read and understand the operator's manual and all the safety decals before operating the spreader. Review all safety instructions with all operators annually.**

## BEFORE OPERATING

***SAFETY INSTRUCTIONS***

Do not wear loose fitting clothing as it may catch in moving parts.

Make sure all guards and shields are installed, including the tractor power take-off (PTO) master shield, before starting or operating the spreader.

Be sure that the correct implement driveline parts are used and that they are properly secured.

Lower the lifter wheels when the spreader is not in use.

Install safety chain when attaching the spreader to the tractor.

Clear the area of bystanders, especially children, when making repairs, adjustments, or performing maintenance on the spreader.

Do not allow riders.

Put all tractor and machine controls in “neutral” and disengage the PTO before starting. Follow the starting instructions according to the OEM tractor manual.

Operate the spreader only while seated on the tractor seat.

Make sure the unit is adequately supported with safety blocks or safety stands when changing tires or performing maintenance.

## DURING OPERATION

**⚠ CAUTION**

**Entanglement Hazard**
**Keep hands, feet, hair, and clothing away from moving parts. Wait for all movement to stop before approaching equipment.**
**Before making adjustments:**

1. **Shut off the tractor,**
2. **Set parking brake,**
3. **Put machine in neutral, and**
4. **Remove key while making adjustments.**

Keep all shields and guards in place and in good working condition.

Keep all bystanders, especially children, away from the spreader while in operation.

Do not allow riders while the spreader is in operation.

Do not attempt to unclog, clean, or adjust the spreader while it is running.

Stay away from overhead power lines. Electrocution can occur even without direct contact.

Keep all hydraulic lines, fittings, and couplers tight and free of leaks. (Refer to Safety Guidelines – Hydraulic Safety).

Use caution when ascending or descending on the spreader. Wet shoes or boots are slippery.

## MAINTENANCE SAFETY

***SAFETY INSTRUCTIONS***

**Follow all operating, maintenance, and safety instructions found in this Manual.**

Before servicing, adjusting, repairing, or unclogging the machine, always make sure the tractor engine is stopped, key in your pocket, the machine is lowered to the ground, all controls are placed in neutral, the parking brake is set, and all the moving parts have stopped.

Use sufficient tools, jacks, and hoists that have the capacity for the job.

Use support blocks or safety stands when changing tires or performing maintenance.

Follow good shop practices of keeping the service area clean and dry, and use adequate light for the job at hand.

Before applying pressure to the hydraulic system, make sure all lines, fittings, and couplers are tightly secured and in good condition.

Make sure all shields/guards are in place and properly secured when performing maintenance.

## HYDRAULIC SAFETY

***SAFETY INSTRUCTIONS***

**Follow all operating, maintenance, and safety instructions found in this Manual.**

Make sure components in the hydraulic system are kept clean and in good working condition.

Relieve pressure from the hydraulic system before servicing or disconnecting from the tractor.

Keep all hydraulic lines, fittings, and couplers tightly secured and free of leaks.

Replace any worn, cut, abraded, flattened, or crimped hoses.

Do not make any temporary repairs to the hydraulic lines, fittings, or hoses using tape, clamps, or cement. The hydraulic system operates under extremely high pressure and temporary repairs may fail suddenly and create a hazardous/dangerous situation.

Wear proper hand and eye protection when searching for a high-pressure hydraulic leak. Use a piece of wood or cardboard as a backstop instead of hands to identify and isolate a leak. If injured by a concentrated high-pressure stream of hydraulic fluid, seek medical attention immediately. Serious infection or toxic reaction can develop if hydraulic fluid penetrates the surface of the skin.

Before applying pressure to the system, make sure all components are tight and that the hydraulic lines, hoses, and couplings are not damaged.

### TRANSPORTATION SAFETY

***SAFETY INSTRUCTIONS***

**Follow all operating and safety instructions found in this manual when transporting this equipment.**

Make sure the spreader complies with all local regulations regarding transporting equipment on public roads and highways.

Make sure the Slow Moving Vehicle (SMV) emblem and all lights and reflectors required by local highway and transportation authorities are properly in place, clean, and clearly visible to traffic.

Do not allow riders on any machinery during transport.

Make sure the spreader is securely attached to the tractor and install a safety chain to the spreader.

Make sure the tractor brake pedals are latched together.

Do not exceed 20 mph (32 km/h) when transporting the spreader. Always reduce speed on rough roads and surfaces, or when going down inclines.

Use caution when turning and always use the turn signals on the tractor to indicate your turning intentions to the other traffic.

The weight of the trailed machine should NEVER exceed the weight of the towing vehicle.

Check all clearances carefully whenever the machine is towed.

Set all features to transport position before transporting the spreader on the roadway.

Stay away from overhead obstructions and power lines during transport. Electrocution can occur even without direct contact.

### STORAGE SAFETY

***SAFETY INSTRUCTIONS***

**Follow all operating and safety instructions found in this manual when storing this equipment.**

Store the spreader in an area away from human activity.

Do not permit children to play on or around the stored machine at any time.

Make sure that the spreader is stored in an area with a firm and level base to prevent the machine from tipping or sinking into the ground.

Block the wheels to prevent the machine from rolling.

## TIRE SAFETY

***SAFETY INSTRUCTIONS***

**Follow all operating and safety instructions found in this manual when working around tires.**

Have only a qualified tire dealer or tire repair service perform tire repairs.

Do not attempt to install a tire on a wheel or rim unless you have the proper equipment and experience to do the job.

Do not substitute tires with a lesser road rating and/or capacity for the original equipment tires.

**⚠ WARNING**

**Explosive Force Hazard**
**Tire replacement, repair, and/or maintenance should be done by a qualified tire dealer or qualified repair service.**

**Failure to follow proper procedures when installing a tire on a wheel or rim can produce an explosive force that will result in serious injury or death.**

**Do not attempt to install a tire without proper equipment and experience to perform the job.**

## ASSEMBLY SAFETY

***SAFETY INSTRUCTIONS***

**Follow all assembly, operating, and safety instructions found in this manual when assembly this equipment.**

Use adequate manpower to perform assembly procedures safely.

Assemble the spreader in an area with sufficient space to maneuver the largest components and allow easy access to all sides of the machine.

Use only forklifts, lift cranes, jacks, and tools with sufficient capacity for the loads.

Do not allow spectators, especially children, in the working area.

**THIS PAGE**
**LEFT**
**INTENTIONALLY**
**BLANK**

# OPERATOR'S INSTRUCTIONS: MANURE SPREADER

# SAFETY

## UNDERSTAND SAFETY WORDS AND SYMBOLS

**THIS SAFETY ALERT SYMBOL** is used in this manual whenever personal safety is involved and means **ATTENTION! BECOME ALERT!** It stresses an attitude of **"HEADS UP"** for safety. Read and understand all pages in this manual that bear this safety symbol and…**TAKE TIME TO BE CAREFUL!**

The Signal Word or Message areas of all safety decals are color coded to indicate the level of hazard.

**CAUTION:** Is used to direct attention to unsafe practices, and uses the color yellow.

**WARNING:** Denotes a specific potential hazard, and uses the color yellow or orange.

**DANGER:** Denotes a most serious specific potential hazard, and uses the color red.

## READ THE OPERATORS MANUAL

Any person who will be operating or maintaining this manure spreader should first read and understand this manual and all safety warnings on the unit.

This instruction manual should always be available to those responsible for the operation and maintenance of this manure spreader. It is the owner's responsibility to provide this safety information to his operators and employees.

Any person who does not understand the safety and operation instructions contained in this manual should not be considered qualified to operate this manure spreader.

## FOLLOW SAFETY INSTRUCTIONS

Specialized procedures and instructions are required and must be adhered to when working on this equipment. Failure to follow the instructions contained in this manual could result in severe personal injury, death, and/or product or property damage. Personnel when operating or maintaining this equipment must use all applicable safety procedures such as OSHA requirements, regional and local safety codes and requirements, safe working practices, and good judgment.

# SAFETY

## OPERATING SAFETY PRECAUTIONS

**WHEN THE SPREADER IS IN OPERATION, IT HAS MANY MOVING PARTS, WHICH COULD CAUSE SEVERE INJURY OR DEATH TO PERSONS COMING IN CONTACT WITH THESE PARTS. TO HELP AVOID SERIOUS ACCIDENTS, THE FOLLOWING GUIDELINES MUST BE FOLLOWED.**

- **BE SURE ALL SAFETY SHIELDS** are in place before operating, including any truck and driveline shields. Exposed machinery, due to missing shielding, can cause severe injury or death. Repair or replace any damaged or missing shielding.

- **NEVER PUT ARMS OR FEET INSIDE UNIT,** or near discharge areas, nor climb on or in the spreader while it is running. NEVER allow anyone to position themselves over or near the top, or near the discharge area of the spreader while it is running. Rotating beaters, shafting, belts, pulleys, and sprockets can grab clothing or create pinch points, which can cause severe injury or death to the operator or bystanders. Always stop engine and remove ignition key so that the spreader cannot be accidentally turned on while inspection, servicing, repairing, or cleaning the spreader.

- **NEVER ATTEMPT TO RELEASE JAMMED MATERIALS OR CLEAN MATERIALS** from any area of the spreader of discharge without turning the spreader off first. Materials can hide moving parts and stopped parts can start unexpectedly, causing severe injury. Always stop engine and remove ignition key before attempting to remove jammed material or clean the spreader.

- **DO NOT ALLOW OPERATION OF THIS UNIT BY AN INEXPERIENCED OR UNQUALIFIED PERSON.** Keep all unqualified people away from spreader during operation. Operators of this unit must be alert and use good judgment at all times and must have fully read and understand this manual.

- **DO NOT WEAR LOOSE OR FLOPPY CLOTHING** while operating this unit. Loose clothing may become entangled in moving machinery.

- **BE SURE THE INSIDE OF SPREADER IS CLEAR** of any obstructions before loading.

- **SHOULD A PROBLEM OCCUR DURING THE OPERATION OF SPREADER, always turn off engine and remove ignition key before investigating problem.** If power source has not been turned off, the spreader may start unexpectedly, causing severe injury or death.

# SAFETY

## TRANSPORTING SAFETY PRECAUTIONS

**WHEN TRANSPORTING A LOADED SPREADER, USE REDUCED SPEED AND BE SURE THE VEHICLE HAS ADEQUATE BRAKES TO STOP.**

- **DO NOT ALLOW ANYONE TO RIDE ON OR INSIDE THE SPREADER.**
- **REDUCE SPEED WHEN TRAVELING** loaded and/or over rough, soft, or wet terrain. Exercise caution on side slopes and when turning corners.
- **AVOID OPERATING THE SPREADER CROSSING GULLIES OR DITCHES.**
- **WHEN WORKING ON SLOPES** or inclines, travel uphill or downhill. Keep the transmission in gear when going downhill.
- **AVOID DRIVING ON** loose fill, rocks, inclines, ditches, and holes.
- **ALWAYS PARK** the spreader on level ground and block the tires.
- **IF UNIT IS FOR HIGHWAY TRANSIT** the end user is responsible for federal, state and local vehicle safety regulation compliance (example: under ride requirements, lighting and weight limitations).

## SAFETY DECALS

**SAFETY DECALS ARE PLACED ON THIS UNIT FOR THE PROTECTION OF THE OPERATOR OR ANY PERSON NEAR THE UNIT.**

- **BE SURE EVERYONE WHO OPERATES THE SPREADER UNDERSTANDS ALL THE INFORMATION, WARNING, CAUTION AND DANGER DECALS.**
- **KEEP THE DECALS CLEAN** so they are readable. This applies to all caution, warning, and danger decals.
- It is the **OWNER'S RESPONSIBILITY** to provide information for safe operation of this machine.
- **REPLACE ANY DAMAGED OR WORN DECAL.** Once any part of a decal becomes non-readable, it should be replaced. Replacement decals may be ordered through your dealer or Art's Way Manufacturing.
- **WHEN REPLACING DECALS,** be sure the surface area is clean and dry, peel the backing off the decal, and apply to the unit. Be sure to wipe with a clean cloth to rub out all air bubbles to assure a good seal. For best adhesion decals should be applied in temperatures of 50°(f) or warmer.

# MANURE SPREADER SAFETY

**THERE ARE INHERENT HAZARDS ASSOCIATED WITH THE OPERATION OF A MANURE SPREADER. FOR YOUR SAFETY:**

- **ONLY PROPERLY INSTRUCTED PEOPLE SHOULD OPERATE THE SPREADER**. Do not allow children or inexperienced persons to operate spreader.
- **KEEP ALL GUARDS AND SHIELDS IN PLACE**. Moving parts can crush and dismember.
- **CLEAR THE AREA** before equipment start up.
- **KEEP HANDS, FEET, AND LOOSE CLOTHING AWAY FROM ANY MOVING PARTS.**
- **DO NOT GO NEAR THE SPREADER WHILE THE MACHINE IS OPERATING**.
- **MAKE SURE THE PTO IS SECURELY LOCKED** to both the tractor and spreader before operating this unit.
- **DO NOT OPERATE PTO AT SPEEDS HIGHER** than manufacturer's recommendations.
- **HIGHWAY TRAFFIC IS NOT TO EXCEED 10 MPH**. The tires supplied are for farm use only and are not designed for use above this speed.
- **USE ADEQUATE SAFETY CHAINS** when towing the spreader.
- **USE OF A SLOW MOVING VEHICLE SIGN IS REQUIRED** on all public roads. Obey all applicable highway safety laws and rules.
- **ALWAYS USE A TRACTOR LARGE ENOUGH TO PROVIDE SUFFICIENT BRAKING** assistance when towing a loaded spreader.
- **USE CAUTION WHEN TRAVELING** over uneven terrain and when approaching stops.
- **DO NOT LOAD THE SPREADER** unless it is hitched to the tractor.
- **DO NOT UNHITCH A LOADED SPREADER** from the tractor. Leaving it supported by only the jack.
- **PARK THE SPREADER ON LEVEL GROUND** and place blocks ahead of and behind the wheels before unhooking from tractor to avoid unexpected rolling when separated from vehicle.
- **DO NOT ALLOW RIDERS ON THE SPREADER.**
- **DO NOT LIFT THE MANURE SPREADER BY THE BOX WELDMENT "D-RINGS".**
- **DO NOT WORK UNDERNEATH SLOP GATE.**

**FAILURE TO HEED MAY RESULT IN SERIOUS PERSONAL INJURY OR DEATH**
**THERE ARE ADDITIONAL HAZARDS ASSOCIATED WITH THE SERVICE AND MAINTENENCE OF YOUR SPREADER.**

**FOR YOUR SAFETY:**

- **INSPECT** when first delivered and regularly thereafter; that all connections and bolts are tight and secure before operating.
- **RETIGHTEN ALL WHEEL BOLTS** after the first hour of towing. Check periodically thereafter.
- **MAINTAIN PROPER TIRE AIR PRESSURE** at all times.
- **ALWAYS WEAR EYE PROTECTION** when operating or servicing spreader.
- **BE SURE ALL MOVEMENT HAS STOPPED** and that the PTO is disconnected and the tractor is shut off before servicing the spreader or components.
- **ESCAPING HYDRAULIC FLUID UNDER PRESSURE** can penetrate skin and cause serious injury. Relieve all pressure from the hydraulic system before connecting or disconnecting the lines or making repairs. Check all hoses and fittings before start-up and periodically during operation.
- **NEVER MAKE ANY ALTERATIONS** or modifications to this equipment.

**FAILURE TO HEED MAY RESULT IN SERIOUS PERSONAL INJURY OR DEATH**

# PRE-OPERATION

**IMPORTANT: READ BEFORE OPERATING SPREADER.**
**IT IS THE RESPONSIBILITY OF THE OWNER TO MAKE SURE THE SPREADER IS SET UP PROPERLY. THE FOLLOWING RECOMMENDATIONS SHOULD BE HELPFUL.**

- **CHECK FOR PROPER ASSEMBLY**, adjustment and lubrication. Check to be sure all bolts and setscrews are tight. Check to be sure that all belts and belt tighteners are properly adjusted. Review Operating Safety Precautions and Lubrication instructions for more information.
- **BE SURE ALL SHIELDS** are properly in place, including any drive-line shields
- **CHECK FOR AND REMOVE ANY FOREIGN OBJECTS** in the spreader box and discharge area.
- **BE SURE NO ONE IS NEAR THE SPREADER**.
- **TEST RUN THE SPREADER**.
- **WITH THE SPREADER EMPTY**, start the apron and beaters.
- **RUN FOR AT LEAST 5 MINUTES**.
- **CHECK THE SPREADER DRIVE COMPONENTS TO BE SURE THEY ARE NOT ABNORMALLY HOT.**

If any of these items are not running as indicated, immediately repair or contact your service representative. Always refer to Operating Safety Precautions before operating or servicing the spreader.

# LUBRICATION

**ALWAYS STOP THE MANURE SPREADER AND DISCONNECT POWER BEFORE SERVICING, REPAIRING, OR CLEANING. USE SAFE SHOP PROCEDURE AND EXERCISE CAUTION WHEN WORKING ON THIS MACHINE!**

It is extremely important to properly lubricate your new Art's Way machine before it is used for the first time. If the mechanical drive components of your unit are not protected from shock and frictional abrasion, the wear rate of these components will be vastly accelerated and their life span will be drastically reduced. For proper care and maintenance, your machine should be serviced with engine oil, multipurpose grease, and fluids specified below.

It is extremely important that the lubrication guide be followed. For lubricating bearings, use good quality multipurpose grease. Pump the grease in slowly. Roller chains should be lubricated with engine oil, or a spray- on chain lubricant and then the spreader operated under a no-load condition. This will allow the roller chains to be thoroughly lubricated and thus minimize heat-up during operation.

| DESCRIPTION | INTERVAL | LUBRICANT |
|---|---|---|
| APRON BEARINGS | 15-20 HOURS | GREASE |
| APRON GEAR CASE | ANNUALLY | EP90 GEAR LUBE |
| APRON CHAIN | WHEN PARKED | 30WT OIL |
| BEATER GEAR CASE | ANNUALLY | EP90 GEAR LUBE |
| UNIVERSAL JOINTS | 15-20 HOURS | GREASE |
| AXLE HUBS | BI-ANNUALLY | GREASE |
| PTO SHAFTS | 15-20 | GREASE |
| SLIP CLUTCH | BI-ANNUALLY | GREASE |
| CAST FLANGE BEARINGS | 15-20 HOURS | GREASE |
| PILLOW BLOCK BEARINGS | 15-20 HOURS | GREASE |
| SLOP GATE PIVOT POINT | 15-20 HOURS | GREASE |

**ALWAYS REPLACE ALL SHIELDS AFTER MAINTENANCE AND LUBRICATION IS COMPLETE**

# INSPECTION & ADJUSTMENTS

**ALWAYS STOP SPREADER, SHUT OFF VEHICLE ENGINE AND REMOVE IGNITION KEY BEFORE SERVICING, REPAIRING, ADJUSTING, OR CLEANING. USE SAFE SHOP PROCEDURES AND EXERCISE CAUTION WHEN WORKING ON THIS MACHINE!**

- **SHIELDING** to be sure all shielding is in place and functioning properly. Replace all damaged or missing shielding immediately, contact your nearest dealer or the **Art's Way** Parts/Service dept. for more information.

- **SAFETY DECALS FOR READABILITY.** If any safety decals are removed, obstructed, or otherwise not understandable, they should be replaced immediately. Keep all decals clean!

- **AFTER A FEW HOURS OF INITIAL OPERATION,** check all nuts, bolts, and set screws to be sure they are tight and secure.

- **CHECK FREQUENTLY.** Thoroughly check all hardware each month or after 25 loads of use, torque to proper setting (see the TORQUE VALUES page) or replace if necessary.

- **CHECK BEATER TEETH.** Bolts must stay tight to prevent teeth from being flung from beaters. Look for wear on teeth and replace any that are worn out or damaged.

- **IMPORTANT: IF YOU WELD ON THIS UNIT:** Do Not allow the currents to flow through the bearings, scale wires, or load cells. Ground directly to the item being welding/repaired.

- **PERIODICALLY CHECK** all bearings and bushings for wear and replace if necessary.

- **INSPECT APRON CHAINS** for wear, proper alignment, and tension, according to the adjustment guidelines shown on before every day of operation.

# BEATER MAINTENANCE

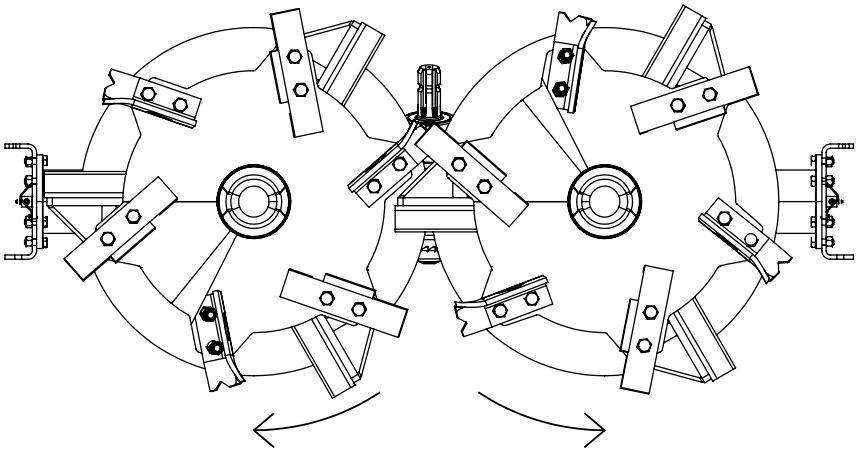

**WARNING:** MAKE SURE THAT ALL PARTS HAVE STOPPED MOVING AND THE IGNITION KEY IS OFF AND REMOVED BEFORE MAKING ANY ADJUSTMENTS, MAINTENANCE, OR REPAIRS.

- **BEFORE EVERY DAY OF USE**, all beater teeth, knives, and scoop hardware should be inspected for damage or signs of loosening. Replace worn or damaged hardware and refer to the TORQUE VALUES page or equivalent hardware torque chart for loose hardware.

- **REPLACE** teeth, knives, and scoops when worn or damaged. They should be replaced in a manner that will keep the corresponding beater shaft as balanced as possible.

- **CHECK OIL LEVEL** in beater gearbox before every day of use, add when needed to proper level in sight plug. Recommend changing oil in gearbox annually see LUBRICATION page.

- **GREASE BEARINGS DAILY**. Inspect grease lines for damage or wear.

- **REMOVE ANY ENTANGLEMENTS** from beaters to limit potential damage to beaters.

**CAUTION:** If any repairs need welding, ground to nearest spot of repair. Be sure no bearings or gearboxes are in between welder and ground connection.

# APRON TENSION ADJUSTMENT GUIDELINES

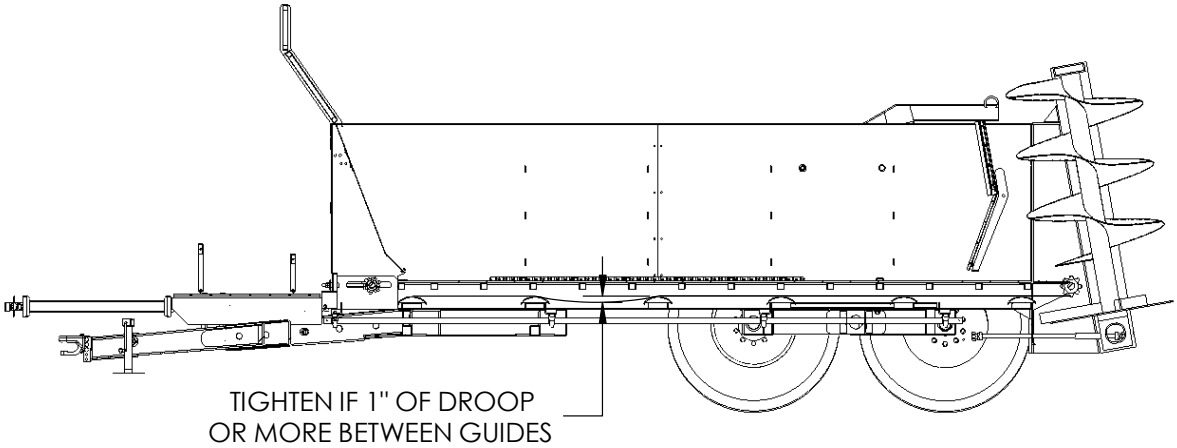


**BE SURE TO KEEP PROPER TENSION ON APRON CHAINS.** The (4) Apron Chain tightener bolts are located in the front of the unit at each side of Apron Shaft. They should be adjusted evenly to help keep proper chain alignment.

If Apron Chain is loose, remove one link from each side of Apron Chain assembly and readjust to tension as shown above.

**CAUTION:** Over tightening can cause premature failure of the chain and drive components. Apron is set tight from factory to account for initial chain stretch. If apron is ran too loose binding could occur and cause damage to the unit.

**OPERATION**

# SPREADER OPERATION

**WARNING:** Before operation, be sure no one is near the spreader and the discharge area is clear of objects or persons that could be harmed if material is discharged!

**WARNING:** MAKE SURE THAT ALL PARTS HAVE STOPPED MOVING AND THE IGNITION KEY IS OFF AND REMOVED BEFORE MAKING ANY ADJUSTMENTS, MAINTENANCE, OR REPAIRS.

1. Verify that the "APRON REVERSE SPEED" knob on the spreader manifold is turned all the way to the "-"/clockwise position to prevent the Apron Chain from being ran in the reverse direction accidentally.

CAUTION: Never attempt to run the Apron Chain in reverse with a full load, as this could cause damage to chain or drives. The "APRON REVERSE SPEED" knob on the manifold should be locked in the "-"/clockwise position unless there is a need to clear the Beaters and should be returned to the "-"/clockwise position as soon as Beaters are cleared.

2. With the vehicle stopped and engine throttled down, slowly engage the PTO to start spinning the Beaters to 1000 RPM.

3. Raise the Slop Gate to your desired height. This should be based on the density of the manure being spread. For cattle manure a fully open gate is recommended where with poultry litter a lower gate height may be used. Use the hydraulic control connected to the "GREEN" hose ends to raise and lower the Slop Gate. 6 GPM flow is needed to run the slop gate at max speed.

4. Engage the Apron Chain, in the forward discharge direction, using the hydraulic control connected to the "BLACK" hose ends. NEVER engage Apron Chain with Slop Gate in the fully closed position. The "APRON DISCHARGE SPEED" knob can be adjusted to change the speed of the Apron Chain to help control flow of material to Beaters. ("+"/counter-clockwise=FASTER, "-"/clockwise=SLOWER). 16 GPM flow is needed to run the apron chain at max speed.

5. Once material starts to contact the Beaters, start tractor in motion and set it to a speed that allows for preferred spreading density.

6. After all the manure is spread, turn off the Apron Chain, close the Slop Gate, and shut down the PTO/Beaters.

If the apron chain fails to move when hydraulic power is supplied from the tractor first shut down everything including the tractor itself and inspect the unit for binds, breakages, hydraulic leaks, or anything out of the ordinary. Fix any issues before continuing.

If all is well check the pressure gauge on the manifold (shown below) while supplying hydraulic power. Your manifold is equipped with a pressure relief valve to protect the system which is set to 2,250 psi. If your gauge is reading 2,250 psi or close to it then it is possible the system is going over relief.

Shut down all power including the tractor and inspect again for anomalies. If none are found then the load on the chain must be lightened. Remove manure until the load is lightened enough to move.

The pressure relief valve setting should never be increased past 2,250 psi and doing so will void any and all applicable warranty. The pressure relief valve setting can be decreased to the minimum amount of psi required to provide additional protection for different types of manure spreaders.

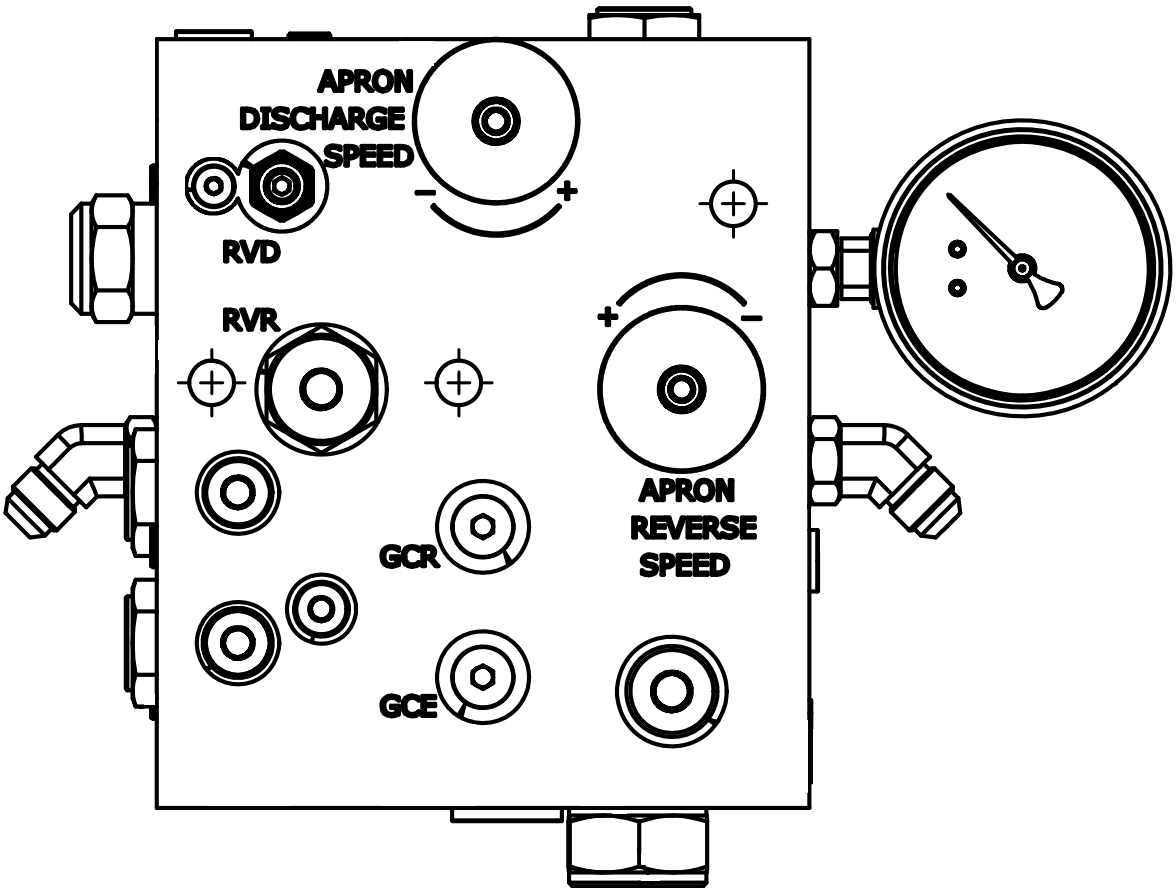

# DEALER SETUP REMINDERS

If the spreader is delivered with running gear disassembled (on a flatbed) or If the spreader is delivered with running gear assembled (towed) and has the floatation tire option installed please take note of the tread direction.

Floatation tires may be installed with "forward pointing" tread direction to decrease floatation properties when in transit to distant destinations. Tires should be installed with "backward pointing" tread direction before unit is delivered to end-user to increase floatation performance in field.

## TORQUE VALUES

Follow the chart below for general torque values.
Lug nuts should be torqued to 400 ft-lbs.
Torque spindle nut to 75-85 ft-lb while rotating the hub.
Loosen spindle nut and re-torque to 45-50 ft-lb.
Loosen spindle nut no more than 30° max to align with cotter pin hole, if not already aligned.

| SIZE | GRADE 5 | | GRADE 8 | |
|---|---|---|---|---|
| DIA-PITCH | PLAIN TORQUE (K=.20) | ZINC TORQUE (K=.17) | PLAIN TORQUE (K=.20) | ZINC TORQUE (K=.17) |
| INCH POUNDS | | | | |
| 4-40 | 8 | 7 | 12 | 11 |
| 4-48 | 9 | 8 | 13 | 12 |
| 6-32 | 16 | 14 | 23 | 20 |
| 6-40 | 18 | 16 | 25 | 22 |
| 8-32 | 30 | 26 | 41 | 36 |
| 8-36 | 31 | 27 | 43 | 38 |
| 10-24 | 43 | 38 | 60 | 53 |
| 10-32 | 49 | 43 | 68 | 60 |
| 1/4"-20 | 96 | 86 | 144 | 126 |
| 1/4"-28 | 120 | 103 | 168 | 144 |
| FOOT POUNDS | | | | |
| 5/16"-18 | 17 | 15 | 25 | 21 |
| 5/16"-24 | 19 | 16 | 27 | 23 |
| 3/8"-16 | 31 | 26 | 44 | 37 |
| 3/8"-24 | 35 | 30 | 49 | 42 |
| 7/16"-14 | 49 | 42 | 70 | 59 |
| 7/16"-20 | 55 | 47 | 78 | 66 |
| 1/2"-13 | 75 | 64 | 106 | 90 |
| 1/2"-20 | 85 | 72 | 120 | 102 |
| 9/16"-12 | 109 | 92 | 154 | 130 |
| 9/16"-18 | 121 | 103 | 171 | 146 |
| 5/8"-11 | 150 | 128 | 212 | 180 |
| 5/8"-18 | 170 | 144 | 240 | 204 |
| 3/4"-10 | 267 | 227 | 376 | 320 |
| 3/4"-16 | 297 | 253 | 420 | 357 |
| 7/8"-9 | 429 | 365 | 606 | 515 |
| 7/8"-14 | 474 | 403 | 669 | 568 |
| 1"-8 | 644 | 547 | 909 | 772 |
| 1"-12 | 722 | 614 | 1020 | 867 |
| 1-1/8"-7 | 800 | 700 | 1280 | 1120 |
| 1-1/8"-12 | 880 | 770 | 1440 | 1260 |
| 1-1/4"-7 | 1121 | 952 | 1817 | 1545 |
| 1-1/4"-12 | 1241 | 1055 | 2012 | 1710 |
| 1-3/8"-6 | 1460 | 1280 | 2380 | 2080 |
| 1-3/8"-12 | 1680 | 1470 | 2720 | 2380 |
| 1-1/2"-6 | 1950 | 1657 | 3162 | 2688 |
| 1-1/2"-12 | 2194 | 1865 | 3557 | 3024 |
| TORQUE VALUES AQUIRED FROM SABRE INDUSTRIAL SUPPLIES AND FASTENAL | | | | |

THIS PAGE
HAS BEEN
LEFT INTENTIONALLY
BLANK

# ILLUSTRATED PARTS LIST: MANURE SPREADER

## HYDRAULICS ASSEMBLY

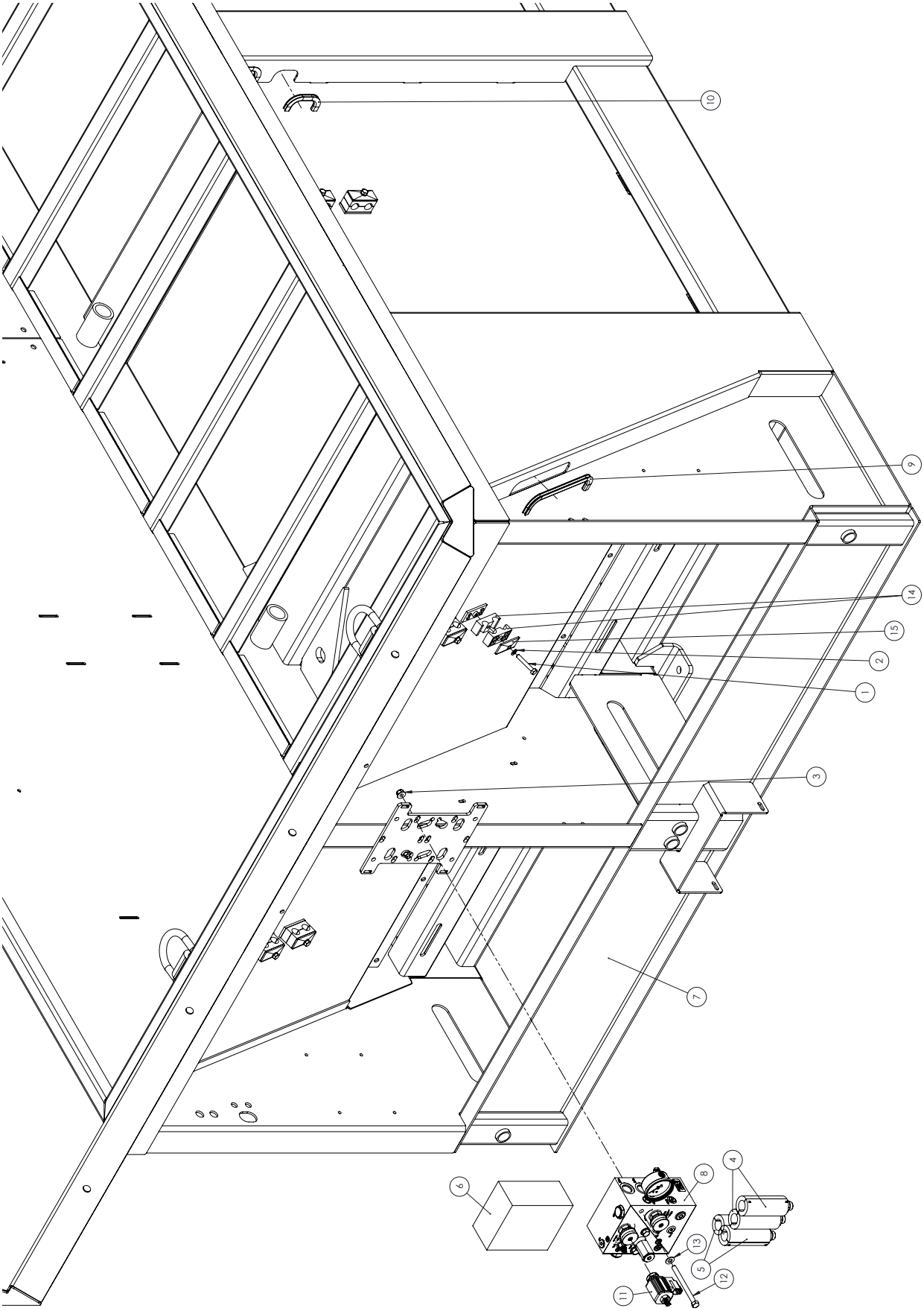

| ITEM NO. | PART NUMBER | DESCRIPTION | QTY. |
|---|---|---|---|
| 1 | 017120 | BOLT, HHCS 5/16-18 X 2 G | 28 |
| 2 | 023620 | WASHER, LOCK 5/16 | 28 |
| 3 | 600120 | NUT, HFH NYLOC 3/8-16 | 3 |
| 4 | 690610 | FITTING, HYD GRIPS BLACK | 1 |
| 5 | 690611 | FITTING, HYD GRIPS GREEN | 1 |
| 6 | 690746 | X700 HYDRAULIC KIT | 1 |
| 7 | 690771 | MAIN BOX WELDMENT, | 1 |
| 8 | 690880 | BLOCK, HYD F13890A1 | 1 |
| 9 | 691097 | EDGE PROTECTOR, HOSES | 2 |
| 10 | 691098 | EDGE PROTECTOR, HOSES | 36 |
| 11 | 691800 * | VALVE, PWM RAVEN | 1 |
| 12 | 991160 | BOLT, HHCS 3/8-16 X 4" | 3 |
| 13 | I120394 | WASHER, FLAT 3/8 SAE | 3 |
| 14 | MP17.01144 | SECTION, HOSE CLAMP | 56 |
| 15 | U51800177 | TOP CAP, HOSE CLAMP | 28 |
| PART NUMBERS WITH * AFTER ARE ON SCALED UNITS ONLY | | | |

## MANIFOLD ASSEMBLY

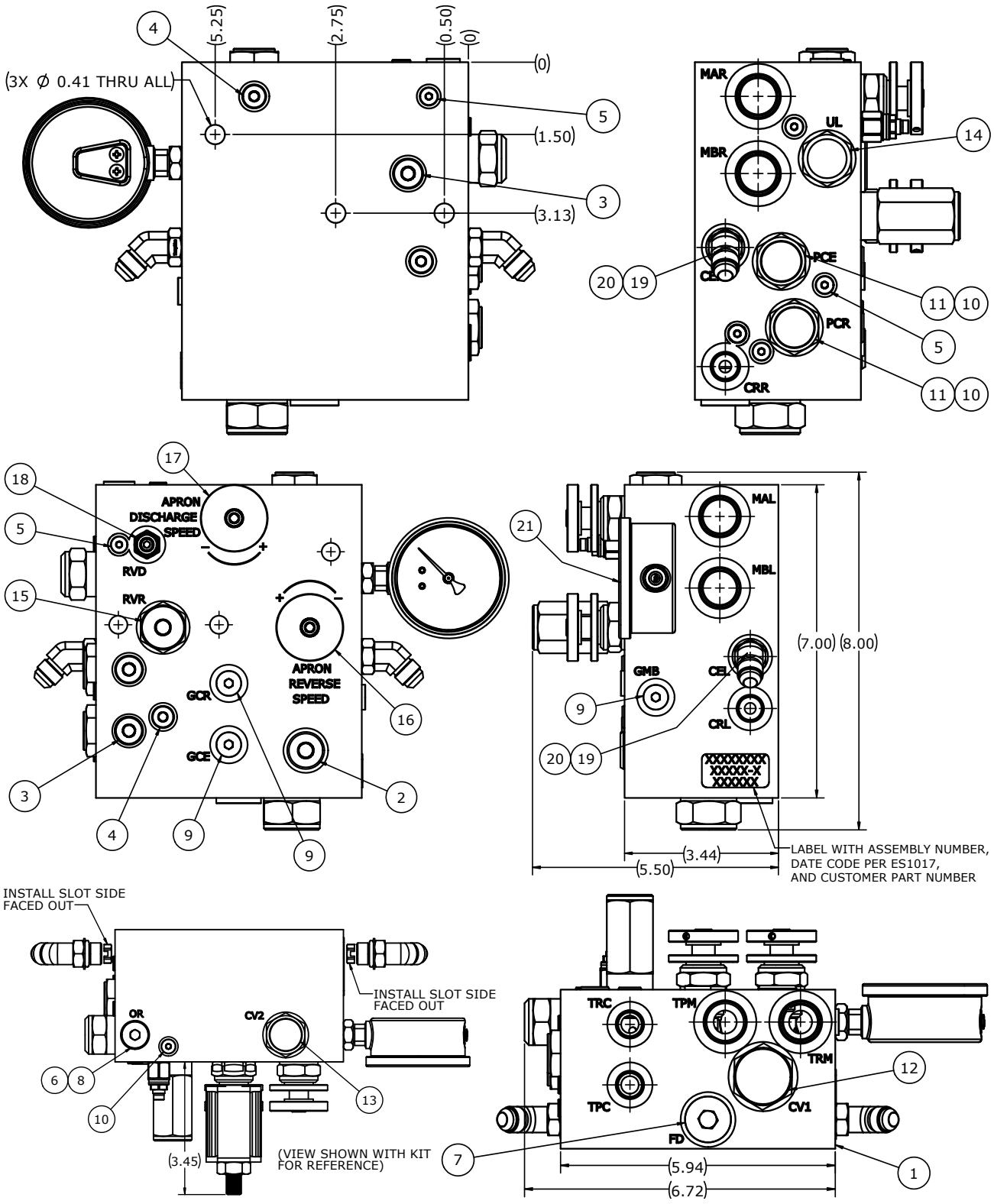

| ITEM NO. | PART NUMBER | DESCRIPTION | QTY. |
|---|---|---|---|
| 1 | N/A | BODY, X-SERIES MANURE SPREADER MFLD | 1 |
| 2 | 691250 | SAE-8 PLUG ZERO-LEAK | 1 |
| 3 | 710834 | SAE-6 PLUG, ZERO-LEAK | 3 |
| 4 | 691251 | SAE-4 PLUG, ZERO-LEAK | 3 |
| 5 | 691252 | SAE-2 PLUG, ZERO-LEAK | 7 |
| 6 | 710820 | ORIFICE PLUG 5/16-24 0.031 | 1 |
| 7 | 274425 | PLUG SAE -10 HOLLOW HEX | 1 |
| 8 | 601112 | PLUG SAE -06 HOLLOW HEX | 1 |
| 9 | 488970P | PLUG SAE -04 HOLLOW HEX | 3 |
| 10 | 691253 | PILOT PISTON -10 SINGLE W/OUT SEALS | 2 |
| 11 | 691254 | CART, CHECK VALVE 35 PSI | 2 |
| 12 | 646208 | CART, CHECK VALVE 5 PSI | 1 |
| 13 | 691255 | CART. CHECK VALVE REV 50 PSI | 1 |
| 14 | 691256 | CART, LOGIC SPOOL N/C L/S ELEMENT | 1 |
| 15 | 691257 | CART, RELIEF VALVE DIFF AREA 1200 PSI | 1 |
| 16 | 691258 | CART, NEEDLE VALVE, FINE ADJ. | 1 |
| 17 | 691259 | CART, NEEDLE VALVE | 1 |
| | 691800 * | PWM VALVE KIT (NEEDED RAVEN UNITS ONLY) | |
| 18 | 691260 | CART, RELIEF VALVE 100-3000 PSI | 1 |
| 19 | 691261 | SAE-6, 0.120 ORIFICE CHECK | 2 |
| 20 | 634103 | FITTING 45 DEG -6 MJIC / -6 MORB | 2 |
| 21 | 646200 | GAUGE - 2.5" LIQUID, STEM MOUNT, SAE -4 | 1 |
| PART NUMBERS WITH * AFTER ARE ON SCALED UNITS ONLY | | | |

## HYDRAULICS DIAGRAM

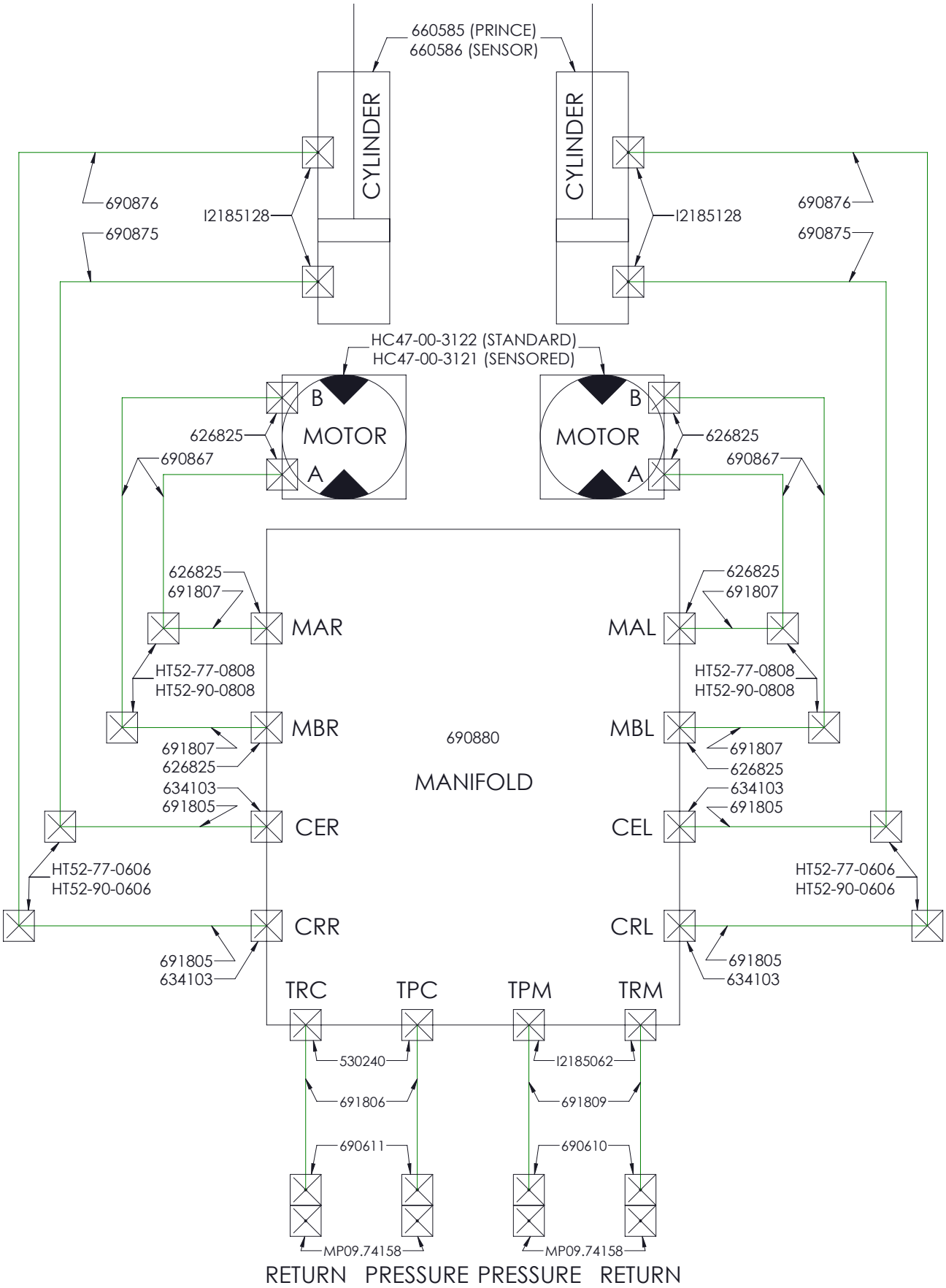

| IDENTIFICATION KEY | |
|---|---|
| LABEL | MEANING |
| OR | ORIFICE |
| CV1 | CHECK VALVE 1 |
| CV2 | CHECK VALVE 2 |
| MAR | MOTOR "A" RIGHT |
| MBR | MOTOR "B" RIGHT |
| MAL | MOTOR "A" LEFT |
| MBL | MOTOR "B" LEFT |
| CRR | CYLINDER RETRACT RIGHT |
| CER | CYLINDER EXTEND RIGHT |
| CRL | CYLINDER RETRACT LEFT |
| CEL | CYLINDER EXTEND LEFT |
| PCR | PILOT CHECK RETRACT |
| PCE | PILOT CHECK EXTEND |
| GCE | GAUGE CYLINDER EXTEND |
| GCR | GAUGE CYLINDER RETRACT |
| GMA | GAUGE MOTOR "A" |
| GMB | GAUGE MOTOR "B" |
| TRC | TRACTOR RETURN CYLINDER |
| TPC | TRACTOR PRESSURE CYLINDER |
| TPM | TRACTOR PRESSURE MOTOR |
| TRM | TRACTOR RETURN MOTOR |
| UL | UNLOADER |
| RVR | RELIEF VALVE RETRACT |
| RVD | RELIEF VALVE DISCHARGE |
| FD | FLOW DIVIDER |

## RUNNING GEAR ASSEMBLY

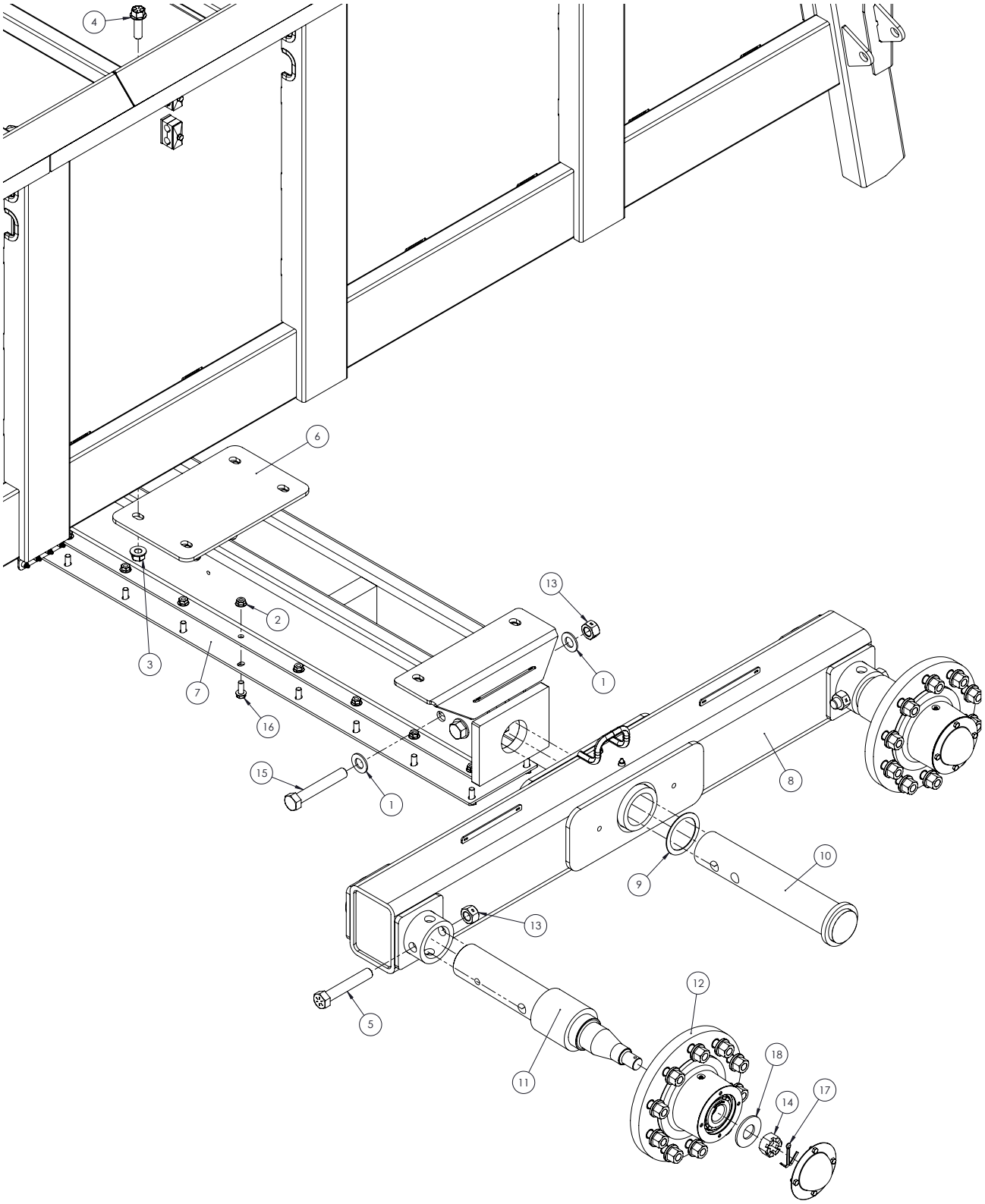

| ITEM NO. | PART NUMBER | DESCRIPTION | QTY. |
|---|---|---|---|
| 1 | 1107389 | WASHER, FLAT 1 SAE | 8 |
| 2 | 600140 | NUT, HFH NYLOC 1/2-13 | 22 |
| 3 | 600160 | NUT, HFH TOPLOCK 3/4-10 | 8 |
| 4 | 600430 | BOLT, HFH 3/4-10 X 2-1/2" | 8 |
| 5 | 600490 | BOLT, HHCS 1-8 X 6" | 4 |
| 6 | 616010 | X700 AXLE, TANDEM | 1 |
| 7 | 616015 | AXLE BRACE/CAP | 1 |
| 8 | 638600 | TANDEM WLDT, ROCKER | 2 |
| 9 | 690670 | SHIM, TANDEM ROCKER | 2 |
| 10 | 690785 | TANDEM ROCKER PIN WLDT, | 2 |
| 11 | 691045 * | WEIGH SPINDLE | 4 |
| | 691040 | STANDARD SPINDLE | |
| 12 | 691050 | HUB ASSY, 10 BOLT/11.25" | 4 |
| 13 | 990510 | NUT, LOCK 2-WAY 1-8 | 8 |
| 14 | E552023 | NUT, SLOTTED 1-1/4-12 | 4 |
| 15 | J08H4722 | BOLT, HHCS 1-8 X 6 1/2 GR8 ZN | 4 |
| 16 | MP904557 | HHDBLT - 1/2-13 X 1-1/4" WHZ | 22 |
| 17 | MP906827 | .25"X 3" COTTER PIN | 4 |
| 18 | R61502 | WASHER,FLAT 1-3/8" STD | 4 |
| PART NUMBERS WITH * AFTER ARE ON SCALED UNITS ONLY | | | |

## HUB ASSEMBLY

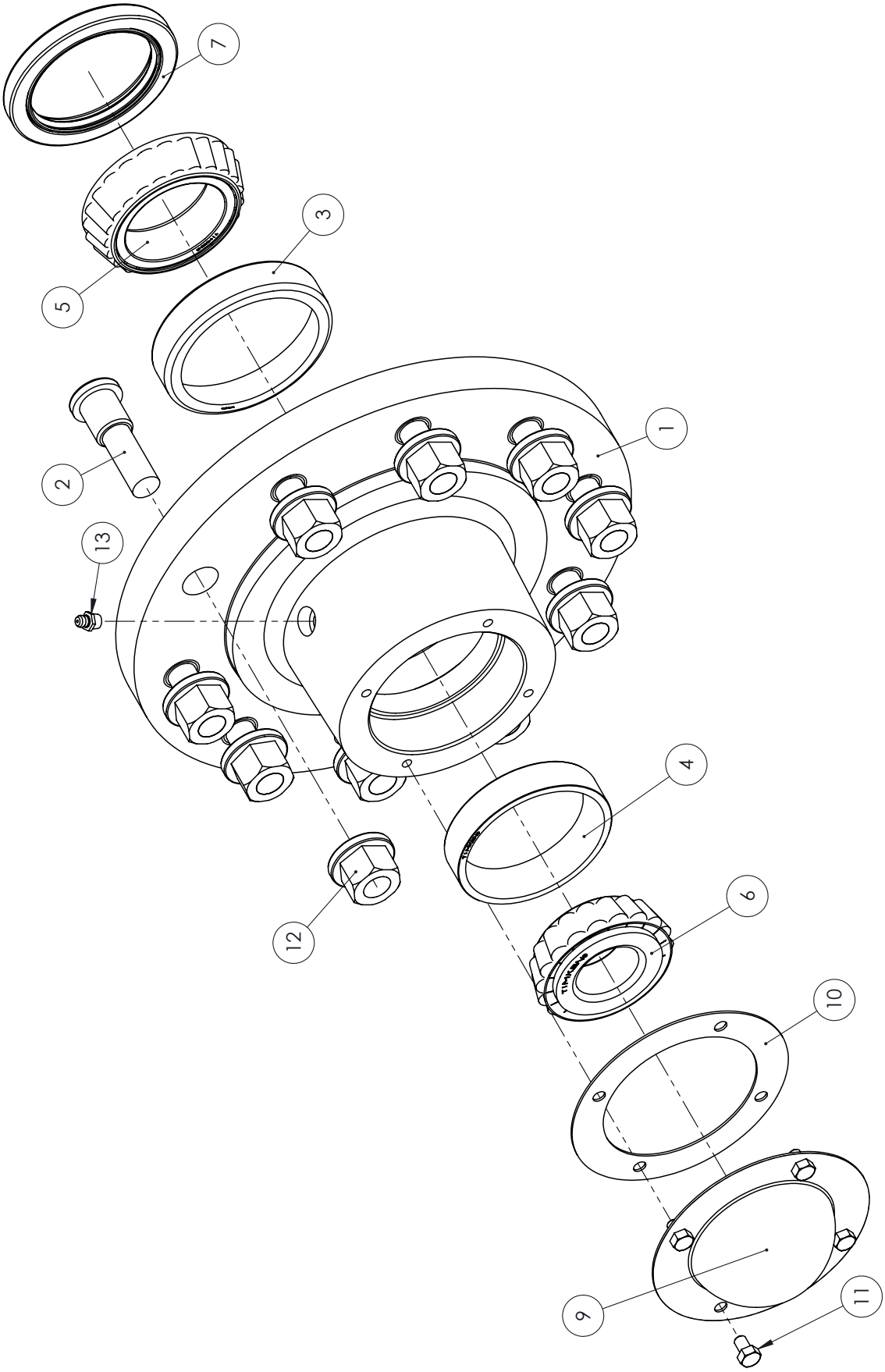

| ITEM NO. | PART NUMBER | DESCRIPTION | QTY. |
|---|---|---|---|
| 1 | 691051 | HUB CAST, GROVE | 1 |
| 2 | 691052 | STUD, HUB 3/4-16 X 3" G8 | 10 |
| 3 | 691053 | RACE, INNER BEARING | 1 |
| 4 | 691054 | RACE, OUTER BEARING | 1 |
| 5 | 691055 | CONE, INNER BEARING NTN | 1 |
| 6 | 691056 | CONE, OUTER BEARING NTN | 1 |
| 7 | 691057 | SEAL, HUB | 1 |
| 8 | 691058 | HUB CAP, GASKET, & BOLTS | 1 |
| 9 | 691092 | HUB CAP | 1 |
| 10 | 691091 | GASKET, HUB CAP | 1 |
| 11 | 136470 | BOLT, HHCS 5/16-18X5/8 GR5 ZN | 4 |
| 12 | 691059 | LUGNUT, S-FLANGE 3/4-16 | 10 |
| 13 | JJD7798 | ZERK, 1/8-27 NPT | 1 |

## TONGUE ASSEMBLY

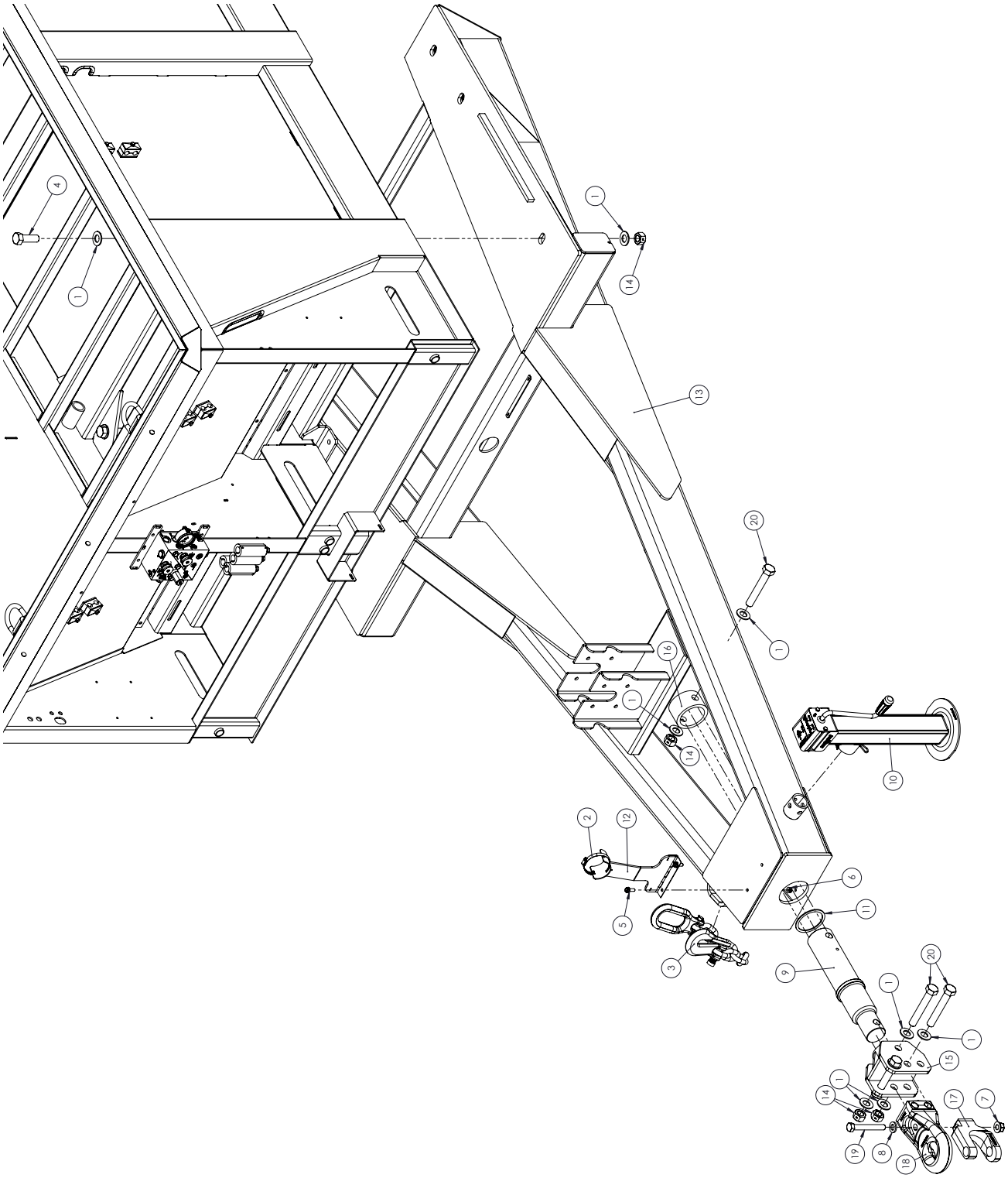

| ITEM NO. | PART NUMBER | DESCRIPTION | QTY. |
|---|---|---|---|
| 1 | 1107389 | WASHER, FLAT 1 SAE | 20 |
| 2 | 455160 | HOSE CLAMP | 1 |
| 3 | 472910 | CHAIN ASSY, SAFETY | 1 |
| 4 | 497590 | BOLT, HHCS 1-8 X 3 GR8 | 6 |
| 5 | 600050 | BOLT, HFH 3/8-16 X 1.00" | 2 |
| 6 | 600120 | NUT, HFH NYLOC 3/8-16 | 2 |
| 7 | 600160 | NUT, HFH TOPLOCK 3/4-10 | 1 |
| 8 | 600330 | WASHER, FLAT 3/4" | 1 |
| 9 | 619840 * | WEIGH BAR, TONGUE | 1 |
| | H160075 | SWIVEL SHAFT | |
| 10 | 630900 | JACK, NICKEL PLATED | 1 |
| 11 | 691038 * | SPACER, TONGUE WEIGH BAR | 1 |
| | H160076 | SPACER, SWIVEL SHAFT | |
| 12 | 691150 | PTO SADDLE REST X900 | 1 |
| 13 | 692795 | TONGUE WLDT, X700 | 1 |
| 14 | 990510 | NUT, LOCK 2-WAY 1-8 | 10 |
| 15 | H160071 | HITCH RECEIVER | 1 |
| 16 | H160077 | SWIVEL HITCH STOP | 1 |
| 17 | HH76-02-8199 | HITCH, CLEVIS | 1 |
| 18 | HH76-02-8238 | HITCH, CAT4 AUSTEMPERED | 1 |
| 19 | I4261288 | HBOLT 0.7500-10X5.5 GR8 ZN | 1 |
| 20 | J08H4722 | BOLT, HHCS 1-8 X 6 1/2 GR8 ZN | 4 |
| PART NUMBERS WITH * AFTER ARE ON SCALED UNITS ONLY | | | |

## DRIVELINE ASSEMBLY

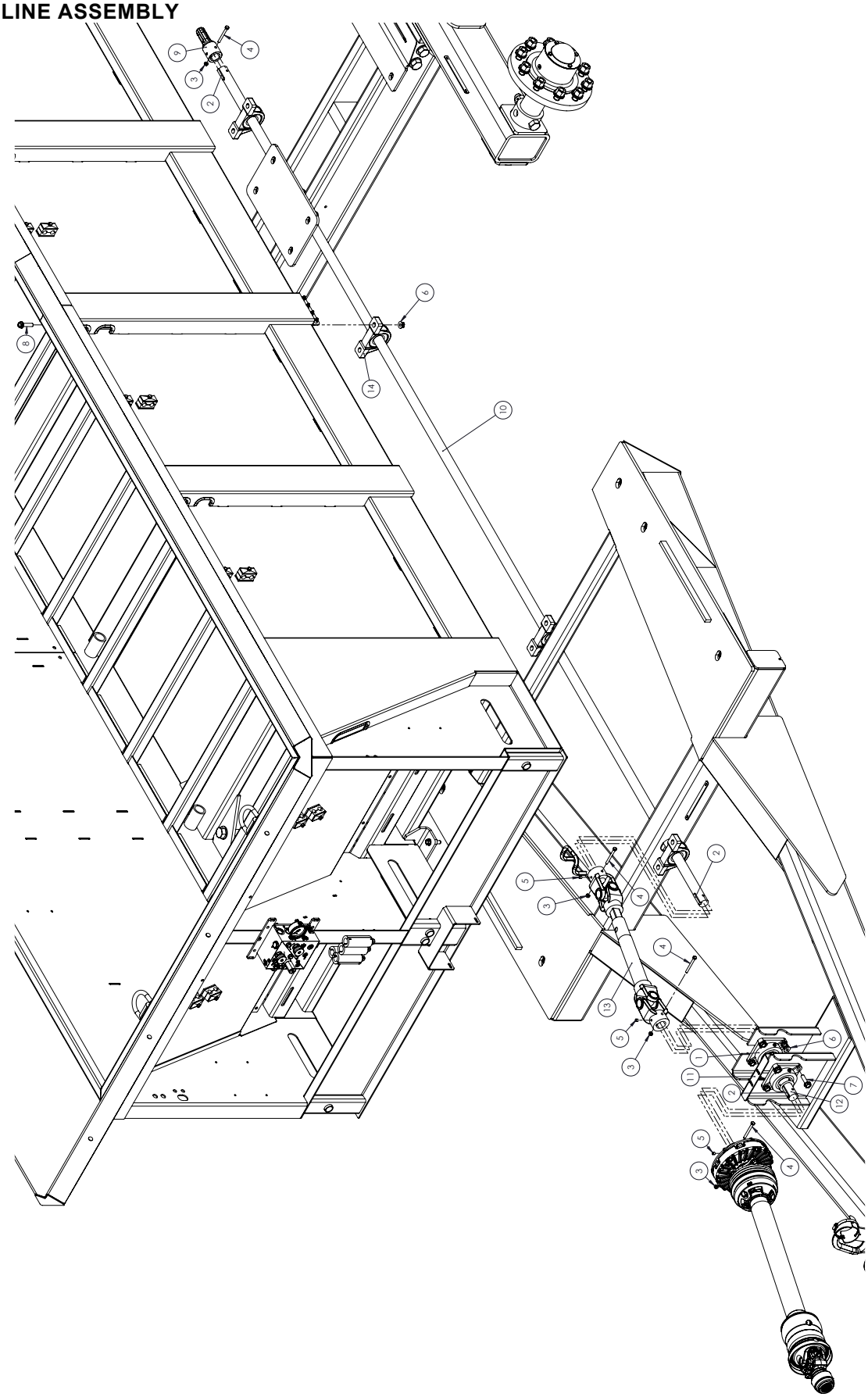

| ITEM NO. | PART NUMBER | DESCRIPTION | QTY. |
|---|---|---|---|
| 1 | 010560 | BEARING, 1-1/2" | 2 |
| 2 | 021530 | KEY, SQUARE 3/8 X 2 | 4 |
| 3 | 025670 | NUT, LOCK 5/16-18 | 4 |
| 4 | 160230 | BOLT, HHCS 5/16-18 X 3 GR5 | 4 |
| 5 | 218660 | SCREW, HSSS 3/8-16 X 3/8 | 3 |
| 6 | 600140 | NUT, HFH NYLOC 1/2-13 | 16 |
| 7 | 600230 | BOLT, HFH 1/2-13 | 8 |
| 8 | 600240 | BOLT, HFH 1/2-13 X 2.00" | 8 |
| 9 | 607060 | PUMP ADAPTER, WELDED | 1 |
| 10 | H140012 | DRIVE SHAFT | 1 |
| 11 | H160025-04 | SUPPORT, PTO SHIELD | 1 |
| 12 | H160028 | PTO DRIVE SHAFT | 1 |
| 13 | H160073 | SLIP SLEEVE SHAFT ASSY | 1 |
| 14 | HK08-55-1027 | BEARING, PILLOW BLOCK 1-1/2" | 4 |
| LINE ITEM | H160105 | PTO, 1-3/8” X 21SPL 1000 RPM CV, CLUTCH, & OVRRUN | N/A |
| | H160106 | PTO, 1-3/4" X 20SPL 1000 RPM CV, CLUTCH, & OVRRUN | |

**SHAFT ASSEMBLY (H160073)**

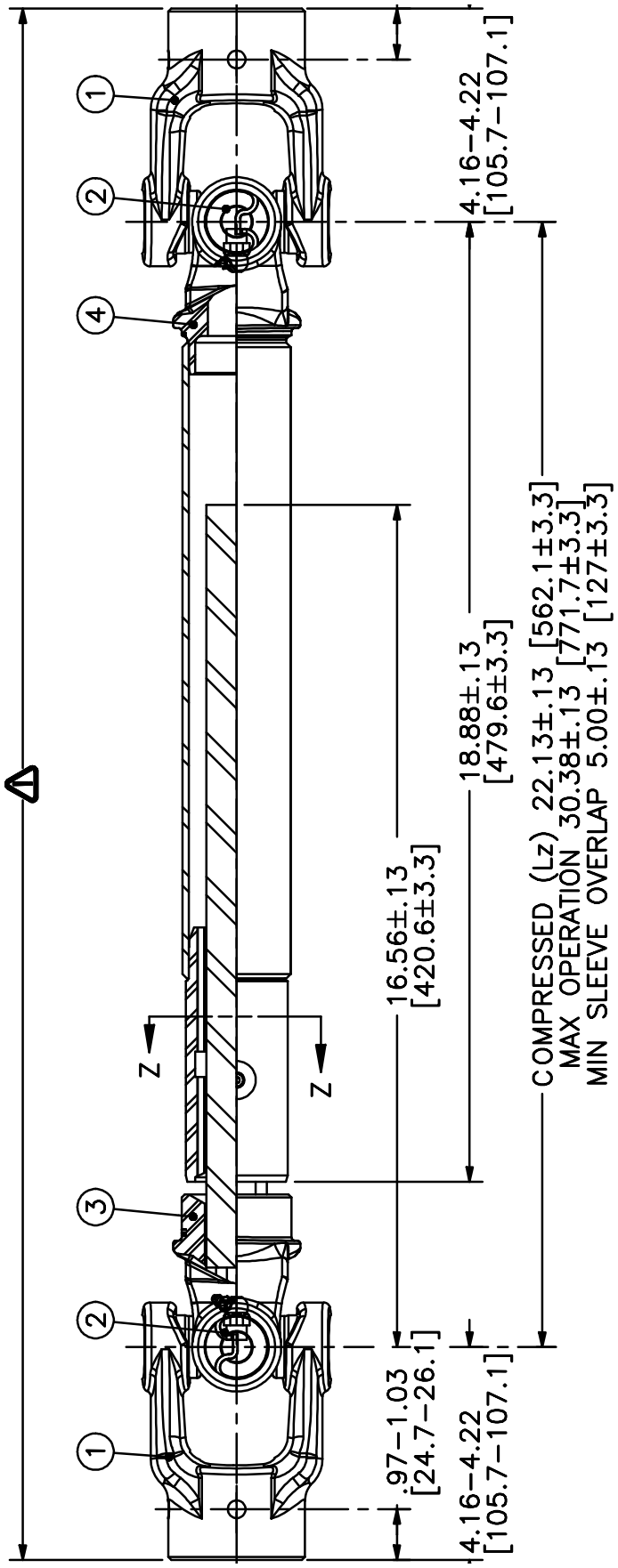

| ITEM NO. | PART NUMBER | DESCRIPTION | QTY. |
|---|---|---|---|
| A | H95-25413 | JOINT & SHAFT HALF ASM. | 1 |
| B | H94-25413 | JOINT & TUBE HALF ASM. | 1 |
| 1 | H35040-1003 | YOKE | 2 |
| 2 | H03-10045 | 35R CROSS KIT | 2 |
| 3 | H99-25413 | YOKE & SHAFT (1.19 SQUARE) | 1 |
| 4 | H98-25413 | TOKE, TUBE, & SLIP SLEEVE | 1 |

**SHAFT ASSEMBLY (H160105) (21 SPLINE)**

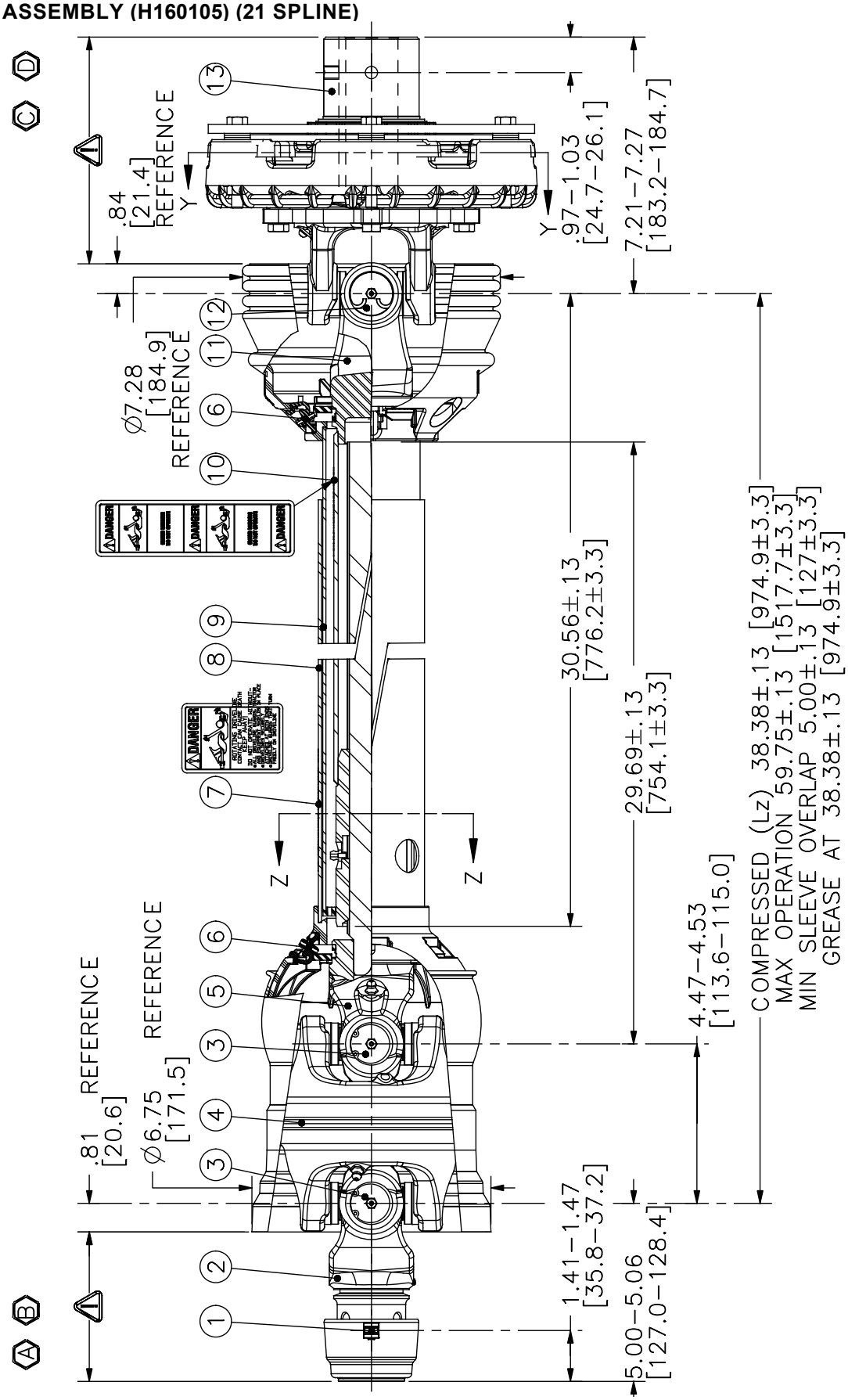

| ITEM NO. | PART NUMBER | DESCRIPTION | QTY. |
|---|---|---|---|
| A | H93-25415 | JOINT & SHAFT HALF ASM. W/GUARD | 1 |
| B | H95-25415 | JOINT & SHAFT HALF ASM. | 1 |
| C | H92-25415 | JOINT & TUBE HALF ASM. W/GUARD | 1 |
| D | H94-25415 | JOINT & TUBE HALF ASM. | 1 |
| 1 | H26-15120 | SSL/AUTO-LOK REPAIR KIT | 1 |
| 2 | H86810-1016 | WWCV AUTO-LOK YOKE ASM. | 1 |
| 3 | H03-15436 | AB6/AW22/CAT 4 80-EBL CROSS KIT | 2 |
| 4 | H26-15159 | WWCV CENTER HOUSING | 1 |
| 5 | H99-25415 | WWCV YOKE & SHAFT (1.31-20 SPINE) | 1 |
| 6 | H19-15126 | GUARD REPAIR KIT | 2 |
| 7 | H13-10021 | SAFETY SIGN | 1 |
| 8 | H97-25415 | OUTER GUARD | 1 |
| 9 | H96-25415 | INNER GUARD | 1 |
| 10 | H13-10022 | SAFETY SIGN | 1 |
| 11 | H98-25415 | YOKE, TUBE, & SLIP SLEEVE | 1 |
| 12 | H03-15287 | 35EBL CROSS KIT | 1 |
| 15 | H38-15088 | FRICTION CLUTCH ASM. | 1 |

**SHAFT ASSEMBLY (H160106) (20 SPLINE)**

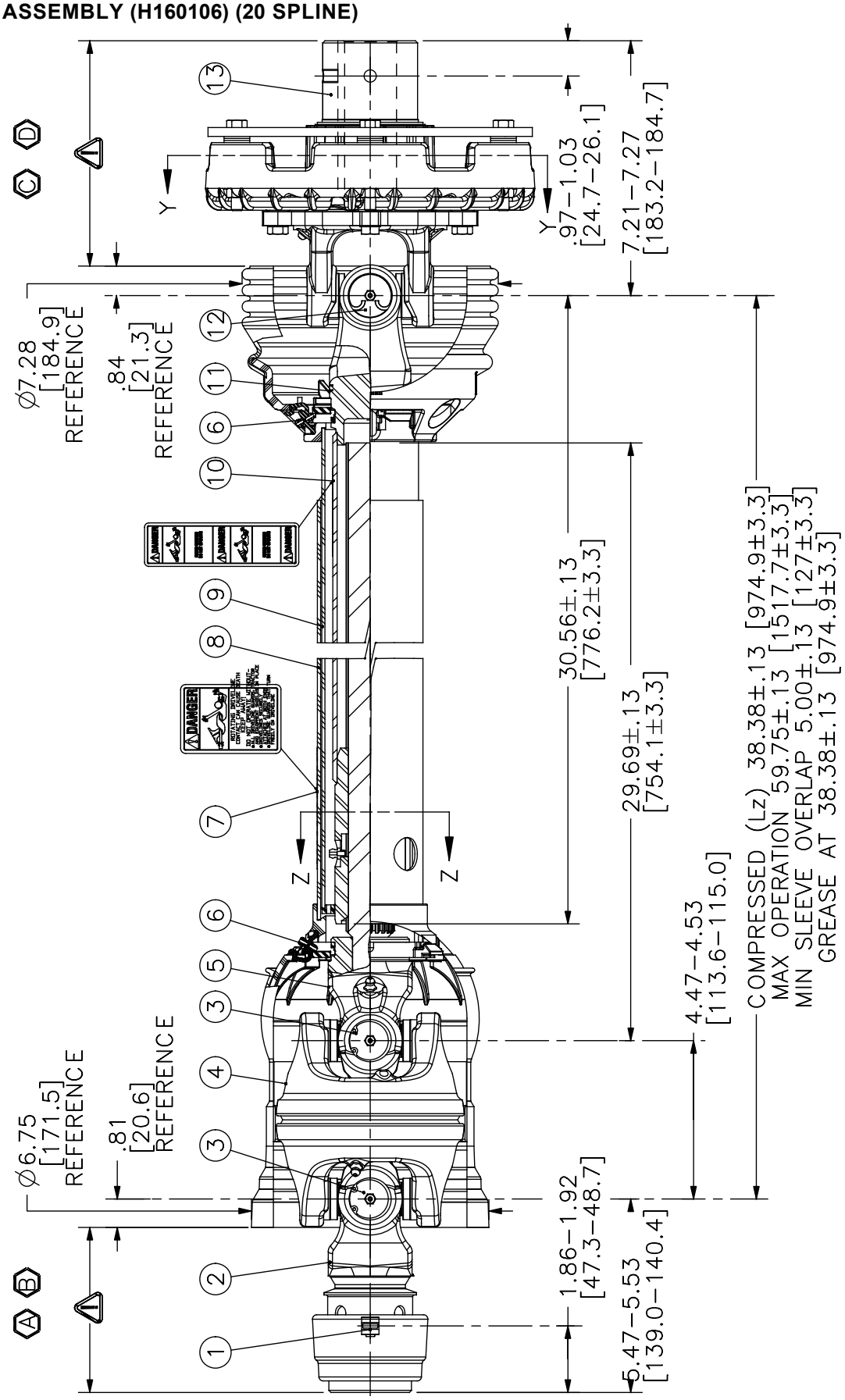

| ITEM NO. | PART NUMBER | DESCRIPTION | QTY. |
|---|---|---|---|
| A | H93-26285 | JOINT & SHAFT HALF ASM. W/GUARD | 1 |
| B | H95-26285 | JOINT & SHAFT HALF ASM. | 1 |
| C | H92-25415 | JOINT & TUBE HALF ASM. W/GUARD | 1 |
| D | H94-25415 | JOINT & TUBE HALF ASM. | 1 |
| 1 | H26-13387 | SSL/AUTO-LOK REPAIR KIT | 1 |
| 2 | H86810-1038 | WWCV AUTO-LOK YOKE ASM. | 1 |
| 3 | H03-15436 | A86/AW22/CAT 4 80-EBL CROSS KIT | 2 |
| 4 | H26-15159 | WWCV CENTER HOUSING | 1 |
| 5 | H99-25415 | WWCV YOKE & SHAFT (1.31-20 SPINE) | 1 |
| 6 | H19-15126 | GUARD REPAIR KIT | 2 |
| 7 | H13-10021 | SAFETY SIGN | 1 |
| 8 | H97-25415 | OUTER GUARD | 1 |
| 9 | H96-25415 | INNER GUARD | 1 |
| 10 | H13-10022 | SAFETY SIGN | 1 |
| 11 | H98-25415 | YOKE. TUBE. & SLIP SLEEVE | 1 |
| 12 | H03-15287 | 35EBL CROSS KIT | 1 |
| 13 | H38-15088 | FRICTION CLUTCH ASM. | 1 |

## GREASE ASSEMBLY

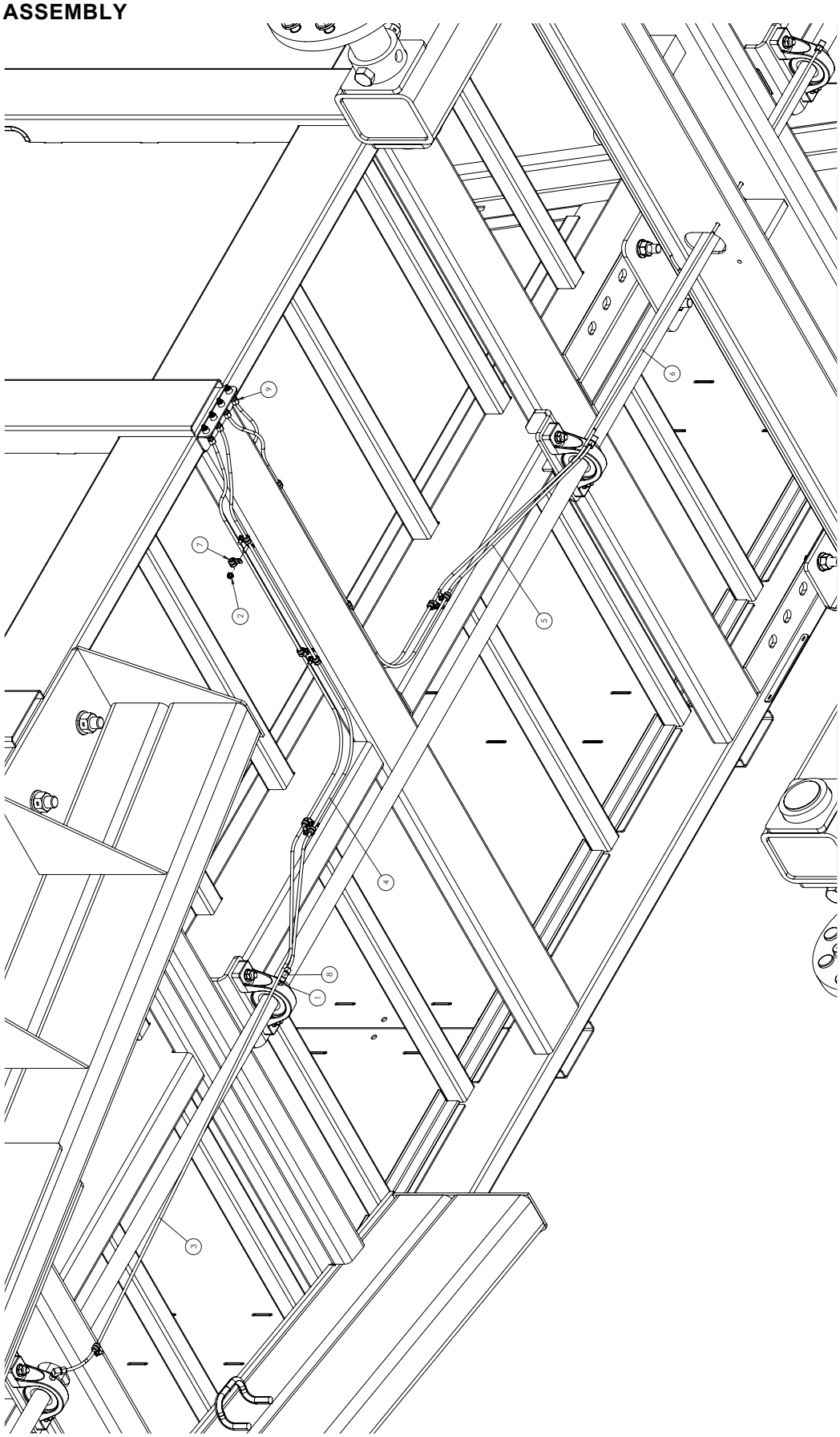

| ITEM NO. | PART NUMBER | DESCRIPTION | QTY. |
|---|---|---|---|
| 1 | 244270 | ADAPTER, STRAIGHT | 4 |
| 2 | 600100 | NUT, HFH NYLOC 1/4-20 | 13 |
| 3 | 691226 | HOSE, GREASE 1/4" X 113" | 1 |
| 4 | 691227 | HOSE, GREASE 1/4" X 64" | 1 |
| 5 | 691228 | HOSE, GREASE 1/4" X 65" | 1 |
| 6 | 691229 | HOSE, GREASE 1/4" X 113" | 1 |
| 7 | HJ14-00-0142 | CLAMP, 1/4" | 13 |
| 8 | HT78-26-0204 | CONNECTOR BRASS, 90, 1/8 | 4 |
| 9 | HT78-47-0204 | CONNECTOR, BRASS, STR., 1/8 | 4 |

## MAIN FLOOR ASSEMBLY

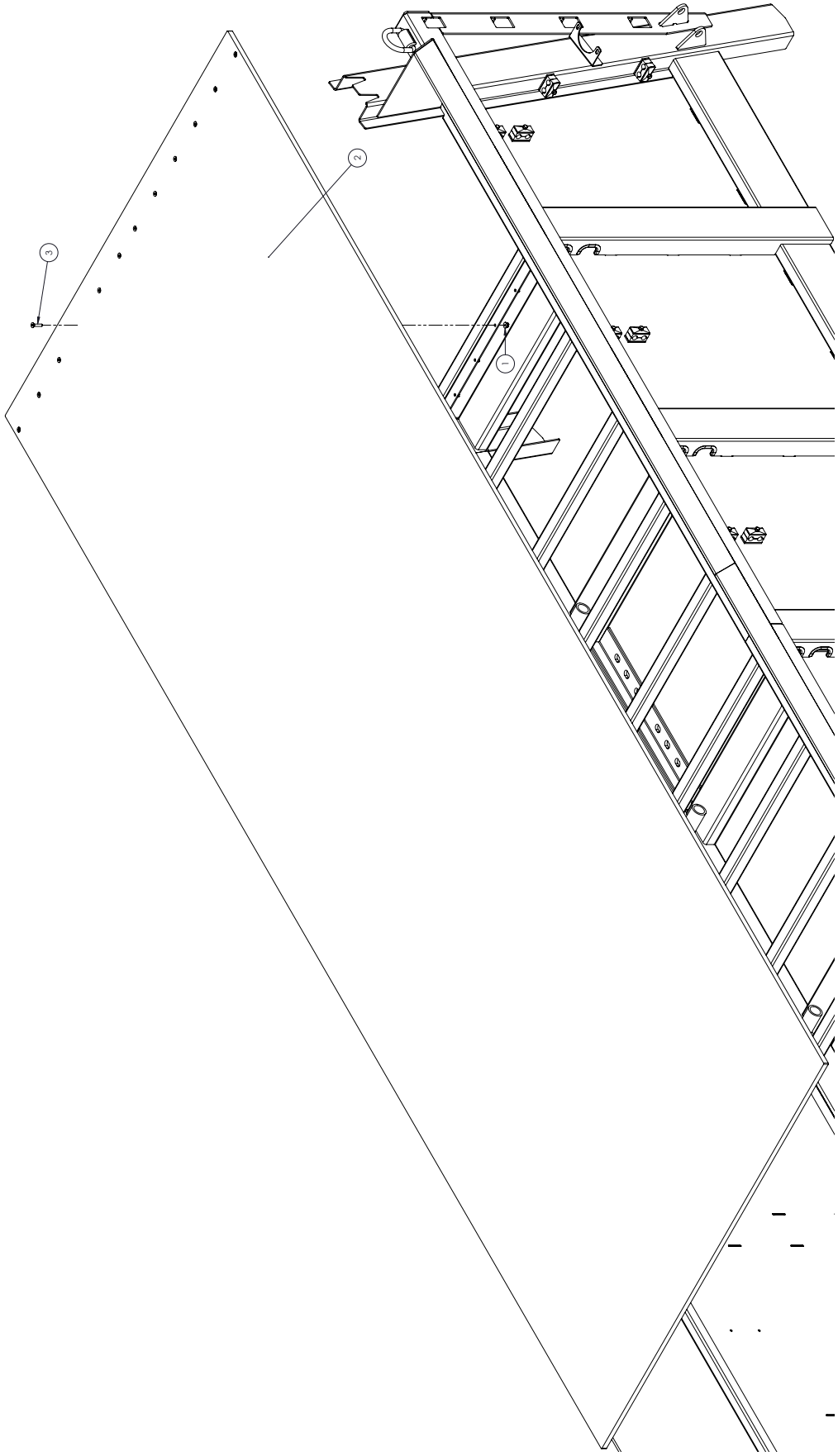

| ITEM NO. | PART NUMBER | DESCRIPTION | QTY. |
|---|---|---|---|
| 1 | 600110 | NUT, HFH NYLOC 5/16-18 | 12 |
| 2 | 691780 | PLASTIC FLOOR, MAIN | 1 |
| 3 | MP907624 | SCREW - FHSCS 5/16-18 X | 12 |

## REAR GANG ASSEMBLY

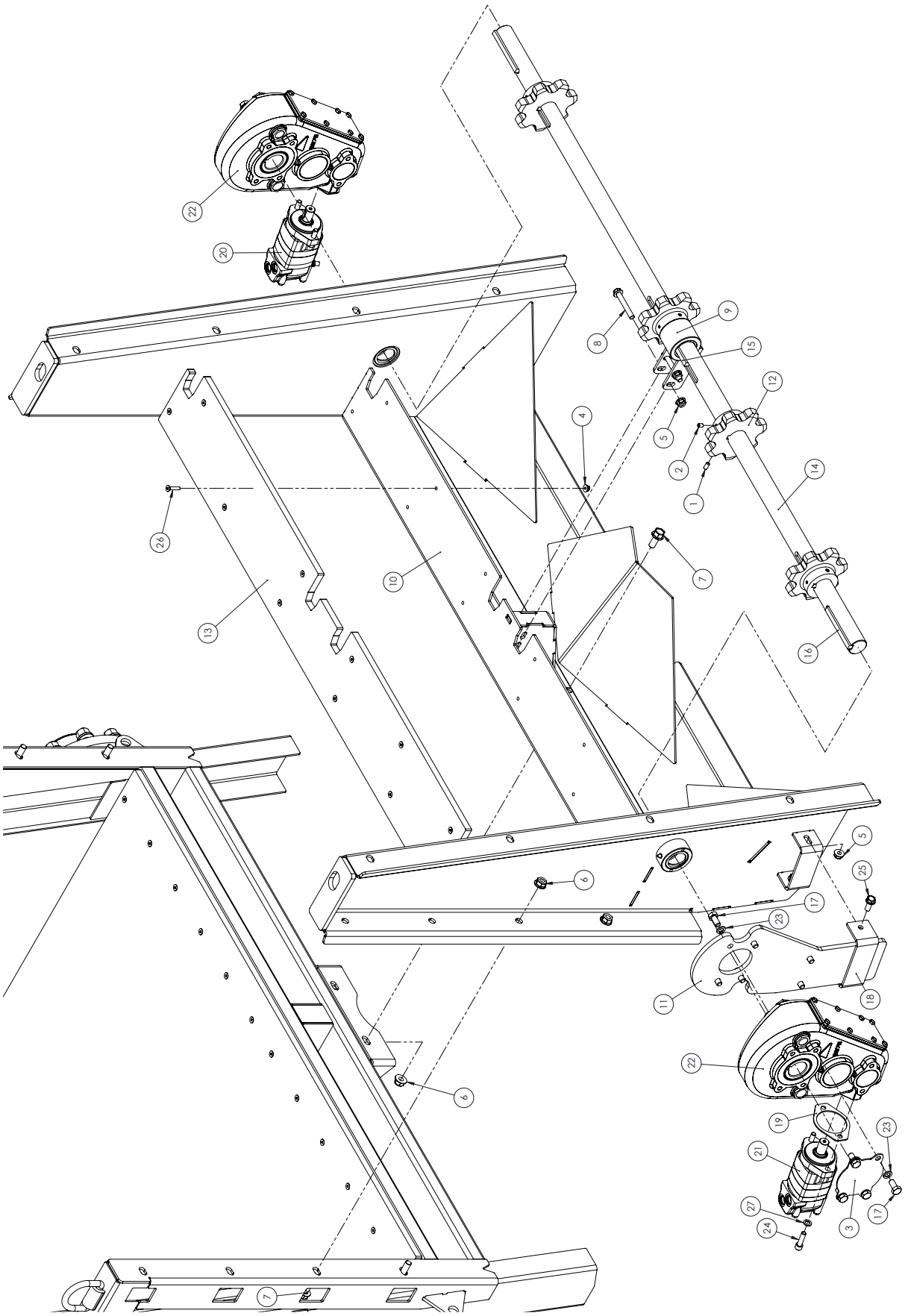

| ITEM NO. | PART NUMBER | DESCRIPTION | QTY. |
|---|---|---|---|
| 1 | 1070121 | SET SCREW 3/8"-16 X 3/4" | 4 |
| 2 | 120970 | SCREW, HSSS 3/8-16 X 1/2" | 4 |
| 3 | 598420 | END PLATE, GEARBOX | 2 |
| 4 | 600110 | NUT, HFH NYLOC 5/16-18 | 12 |
| 5 | 600140 | NUT, HFH NYLOC 1/2-13 | 6 |
| 6 | 600150 | NUT, HFH NYLOC 5/8-11 | 6 |
| 7 | 600210 | BOLT, HFH 5/8-11 | 6 |
| 8 | 607670 | BOLT, HFH 1/2-13 X 2.00" | 2 |
| 9 | 609500 | MOUNT, BUSHING | 1 |
| 10 | 690776 | X700 REAR GANG | 1 |
| 11 | 691714 | TORQUE PLATE | 2 |
| 12 | 691720 | SPROCKET, 7 TOOTH 88C | 4 |
| 13 | 691785 | PLASTIC FLOOR, REAR | 1 |
| 14 | 691831 | REAR APRON SHAFT, | 1 |
| 15 | 691832 | KEY, SQUARE 2-1/4" | 4 |
| 16 | 691834 | KEY, SQ 1/2" X 5-11/16" | 2 |
| 17 | H4138 | BOLT, HHCS M14-2 X 30 GR8.8 ZN | 20 |
| 18 | H610131 | BRACKET, U | 2 |
| 19 | H610132 | GASKET, MOTOR/GEARBOX | 2 |
| 20 | HC47-00-3121 * | MOTOR, HYD, RPM SENSOR | 1 |
| | HC47-00-3122 | MOTOR, HYD | |
| 21 | HC47-00-3122 | MOTOR, HYD | 1 |
| 22 | HO74-01-5069 | GEARBOX, RIGHT ANGLE | 2 |
| 23 | HZ83-66-1414 | WASHER, LOCK 5/8 | 20 |
| 24 | HZ86-11-1245 | SHCS, M12-1.75 X 45 | 4 |
| 25 | MP904557 | HHDBLT - 1/2-13 X 1-1/4" WHZ | 4 |
| 26 | MP907624 | SCREW - FHSCS 5/16-18 X | 12 |
| 27 | MP907700 | WASHER, LOCK M12 | 4 |
| PART NUMBERS WITH * AFTER ARE ON SCALED UNITS ONLY | | | |

## GEARBOX ASSEMBLY (HO74-01-5069)

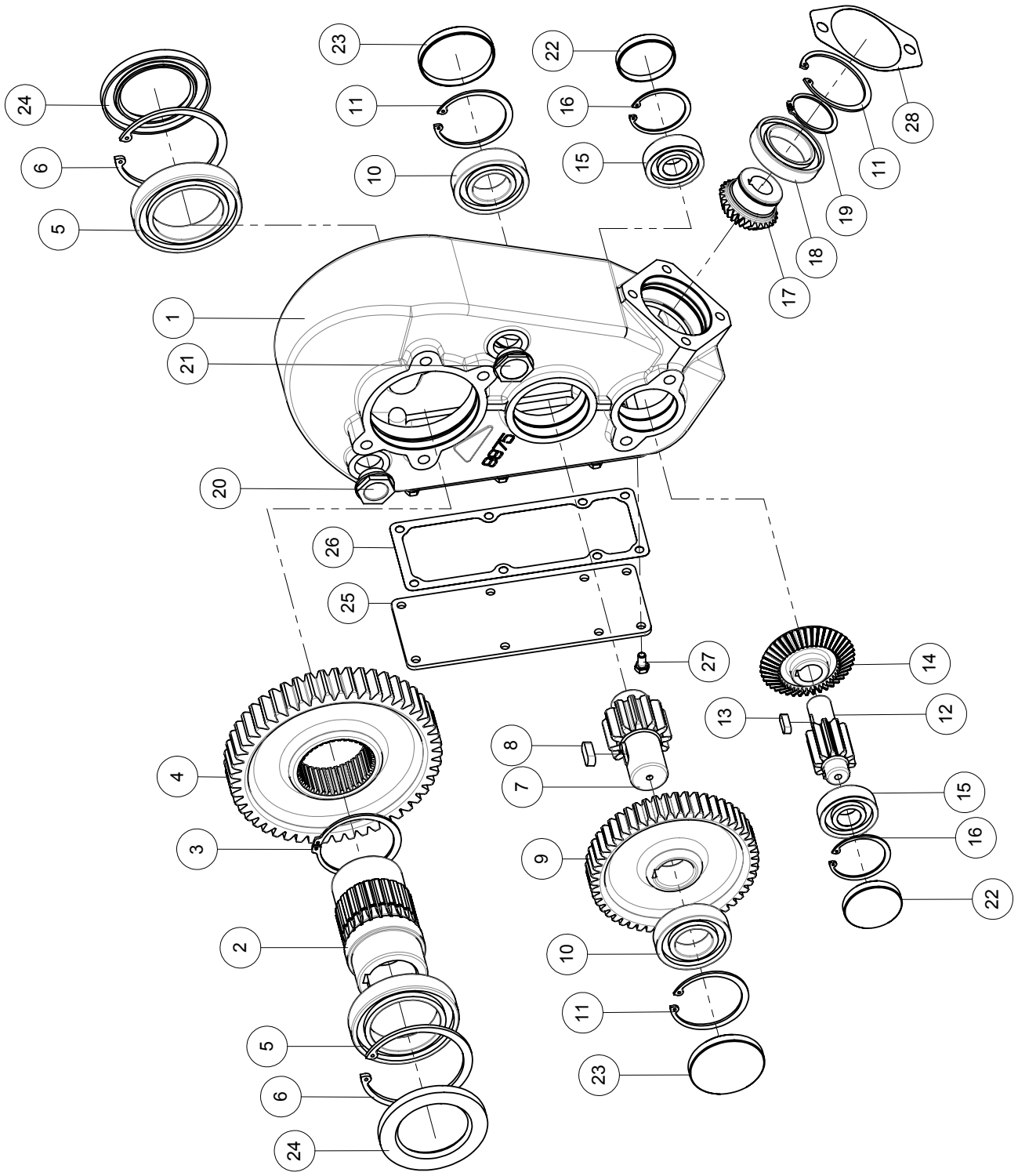

| ITEM NO. | PART NUMBER | DESCRIPTION | QTY. |
|---|---|---|---|
| 1 | H9975 | HOUSING RT350 | 1 |
| 2 | H14551 | HUB Ø2" | 1 |
| 3 | H9918 | CIRCLIP E 82 | 1 |
| 4 | H9974 | GEAR Z=49 | 1 |
| 5 | H9982 | BEARING 6015 | 2 |
| 6 | H9984 | CIRCLIP I 115 | 2 |
| 7 | H8670-5 | PINION Z=12 | 1 |
| 8 | H4174 | KEY 12X8X30 | 1 |
| 9 | H8670-4 | GEAR Z=50 | 1 |
| 10 | H3342 | BEARING 6208 | 2 |
| 11 | H3435 | CIRCLIP I 80 | 3 |
| 12 | H8670-3 | PINION Z=10 | 1 |
| 13 | H3396 | KEY 8X7X25 | 1 |
| 14 | H8670-2 | GEAR Z=43 | 1 |
| 15 | H8596 | BEARING 6305 | 2 |
| 16 | H3433 | CIRCLIP I 62 | 2 |
| 17 | H9923 | PINION Z=28 | 1 |
| 18 | H1538 | BEARING 6010 | 1 |
| 19 | H3428 | CIRCLIP E 50 | 1 |
| 20 | H9175 | OIL BREATHER PLUG Ø1"GAS | 2 |
| 21 | H1831 | OIL LEVEL INDIC. Ø1"GAS | 2 |
| 22 | H8625 | PLUG Ø62 | 2 |
| 23 | H8243 | PLUG Ø80 | 2 |
| 24 | H9983 | OIL SEAL 75/115/10 | 2 |
| 25 | H9976 | COVER | 1 |
| 26 | H9977 | GASKET | 1 |
| 27 | H3284 | SCREW,HEX-HD M8X16 | 8 |
| 28 | H610132 | GASKET | 1 |

## LIGHTS ASSEMBLY

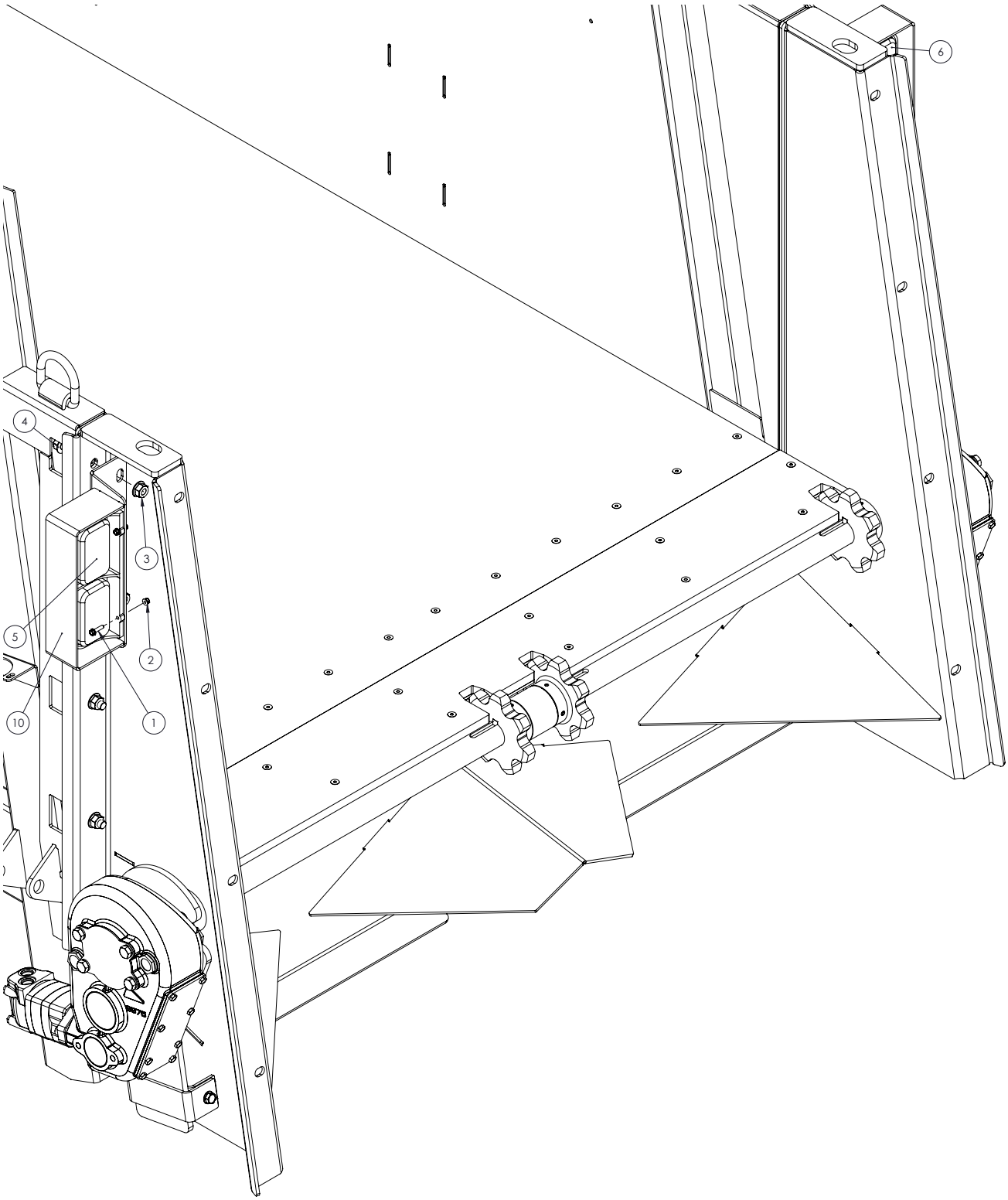

| ITEM NO. | PART NUMBER | DESCRIPTION | QTY. |
|---|---|---|---|
| 1 | 600020 | BOLT, HFH 1/4-20 X 1.00" | 8 |
| 2 | 600100 | NUT, HFH NYLOC 1/4-20 | 8 |
| 3 | 600150 | NUT, HFH NYLOC 5/8-11 | 4 |
| 4 | 600210 | BOLT, HFH 5/8-11 | 4 |
| 5 | 642580 | LIGHT, LED | 1 |
| 6 | 642590 | LIGHT, LED | 1 |
| NOT SHOWN | 642600 | HARNESS, Y-SPLITTER | 1 |
| | 642610 | HARNESS, 20' LIGHT | 2 |
| | 642620 | HARNESS, MAIN LIGHT | 1 |
| 10 | 691940 | LIGHT BRACKET | 2 |

## LIGHTS DIAGRAM

M-F DESIGNATION REFERS TO THE PINS NOT THE CONNECTOR HOUSING WHICH IS OPPOSITE

GROUND
TAIL/RUNNING
AUX
RIGHT TURN

STOP/BRAKE
LEFT TURN
WORK LAMPS

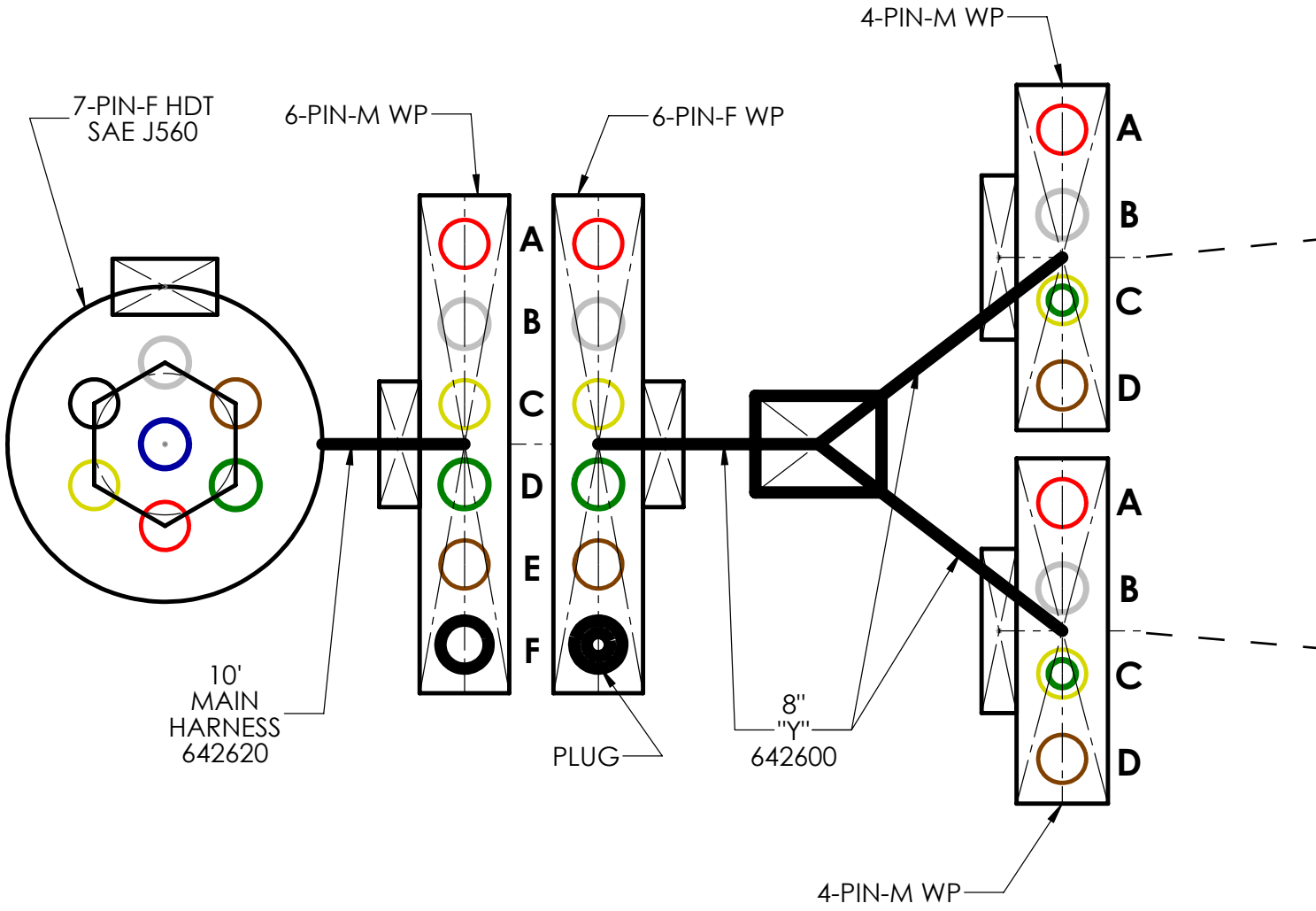


ALL END CONNECTORS ARE SHOWN LOOKING AT THE PIN SIDE WITH LOCKING TABS POINTING THE DIRECTION SHOWN

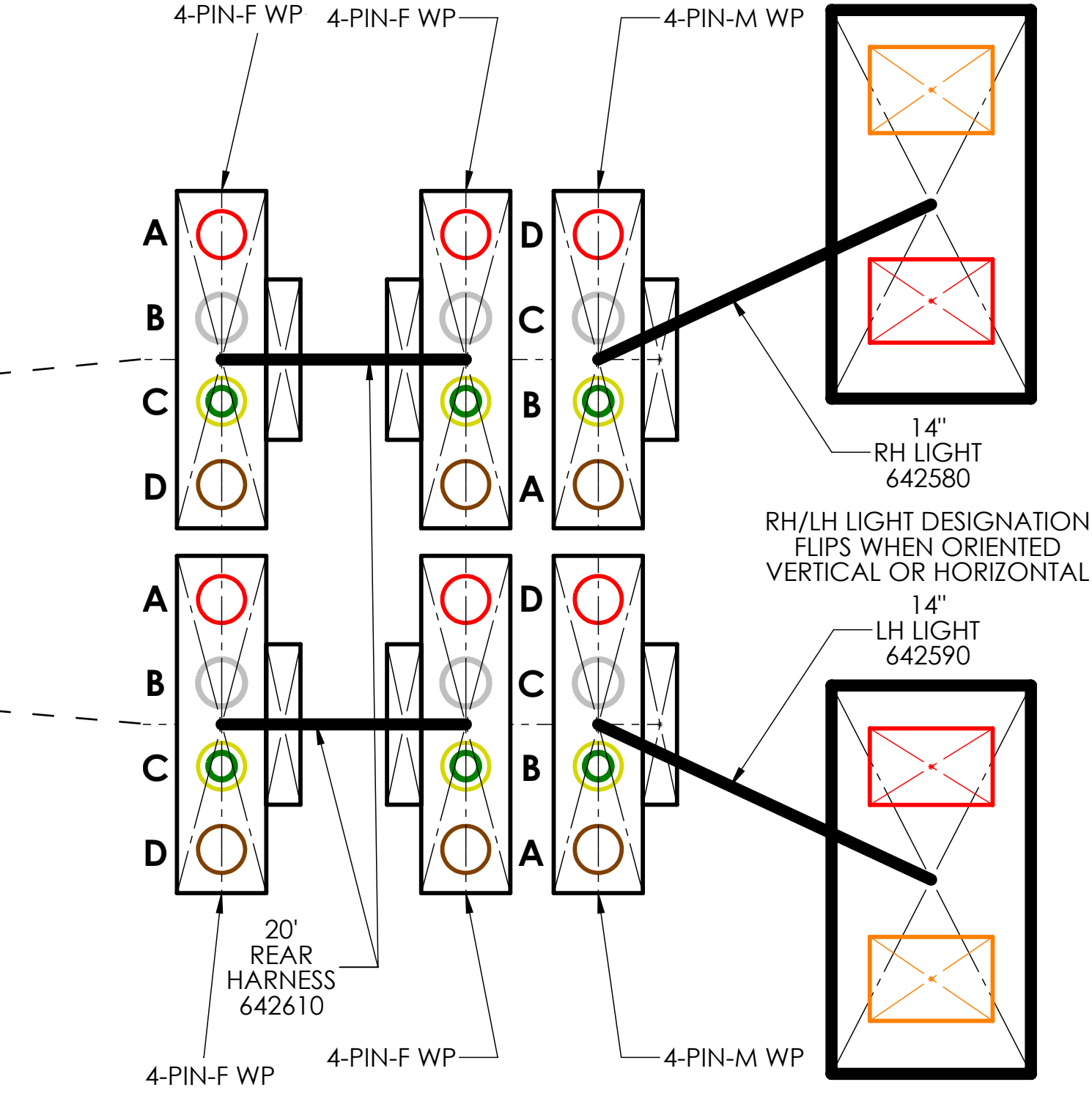
4-PIN-F WP
4-PIN-F WP
4-PIN-M WP
A
B
C
D
D
C
B
A
14"
RH LIGHT
642580
RH/LH LIGHT DESIGNATION
FLIPS WHEN ORIENTED
VERTICAL OR HORIZONTAL
14"
LH LIGHT
642590
A
B
C
D
D
C
B
A
20'
REAR
HARNESS
642610
4-PIN-F WP
4-PIN-F WP
4-PIN-M WP

## WHEEL ASSEMBLY (USED MILITARY)

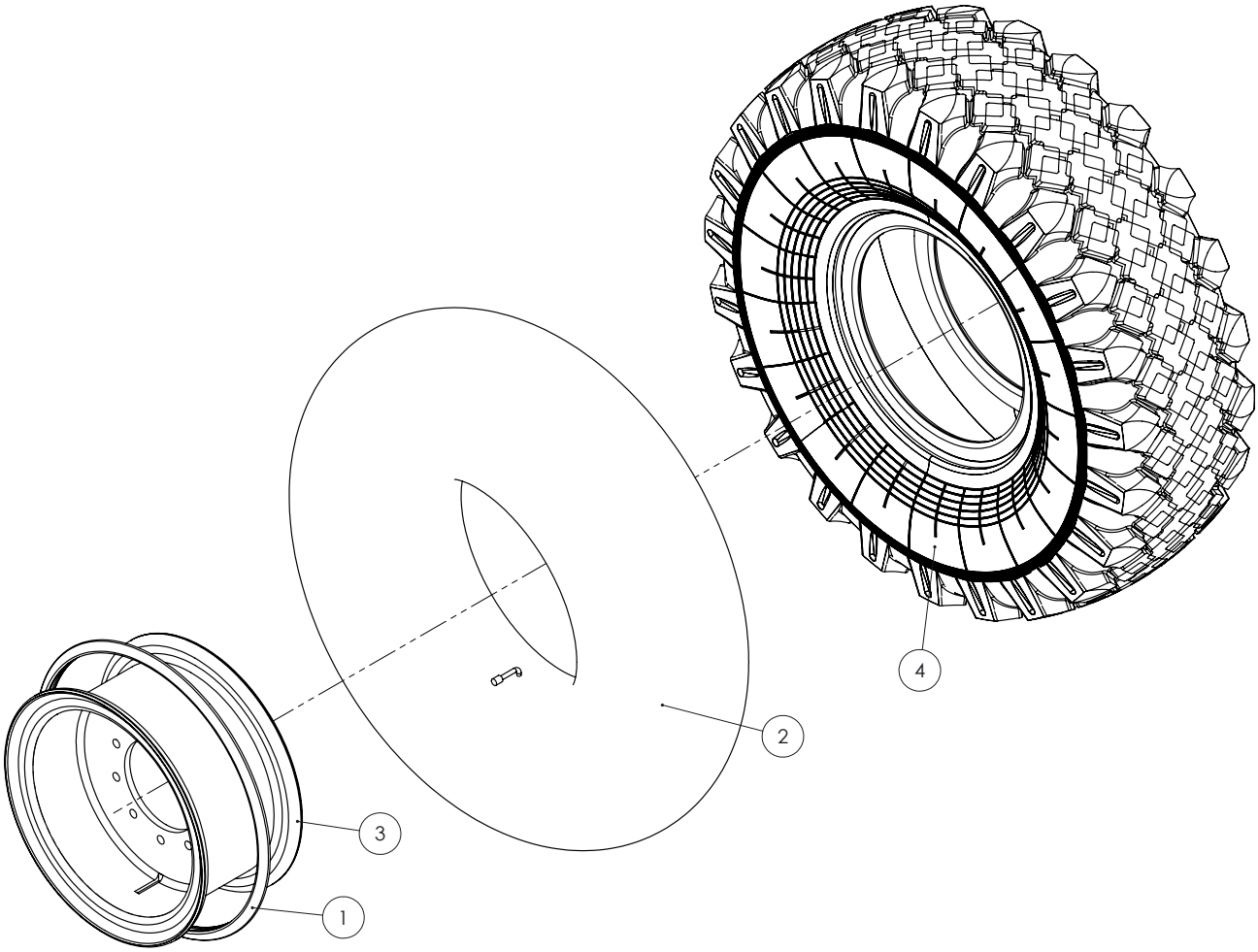

| ITEM NO. | PART NUMBER | DESCRIPTION | QTY. |
|---|---|---|---|
| 1 | 606100 | RUBBER RING, WHEEL LOCKING | 1 |
| 2 | 606105 | TUBE, W/ STEM | 1 |
| 3 | 659004 | RIM, 1.5" OFFSET | 1 |
| 4 | HN69-07-4073 | TIRE, 425/65RX22.5 | 1 |

## WHEEL ASSEMBLY (RH GOODYEAR FLOATATION 690623)

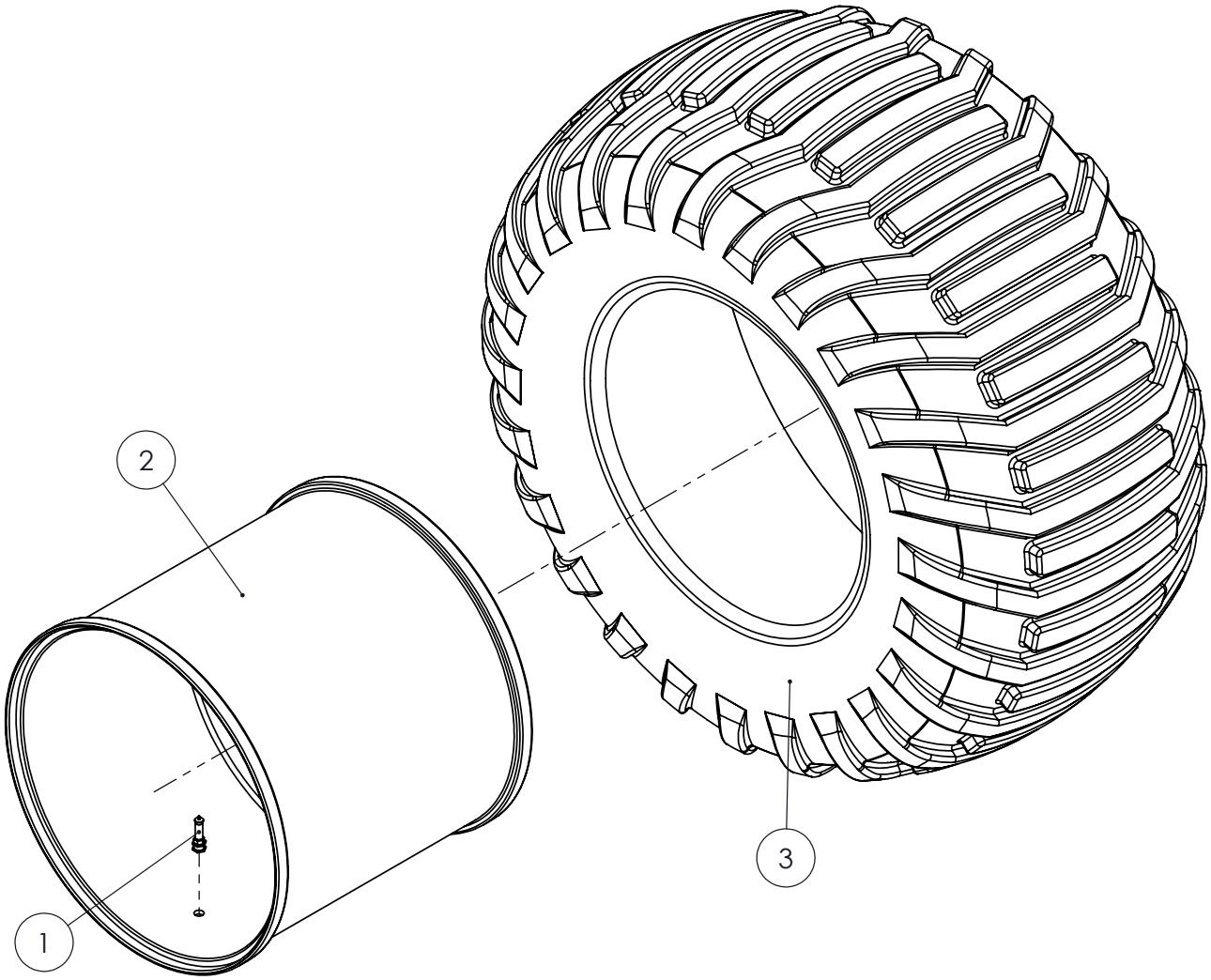


| ITEM NO. | PART NUMBER | DESCRIPTION | QTY. |
|---|---|---|---|
| 1 | 269490 | STEEL VALVE STEM | 1 |
| 2 | 659005 | RIM, 22.5"X20" | 1 |
| 3 | MP12.11073 | TIRE, 600/50R22.5 | 1 |

## WHEEL ASSEMBLY (LH GOODYEAR FLOATATION 690624)

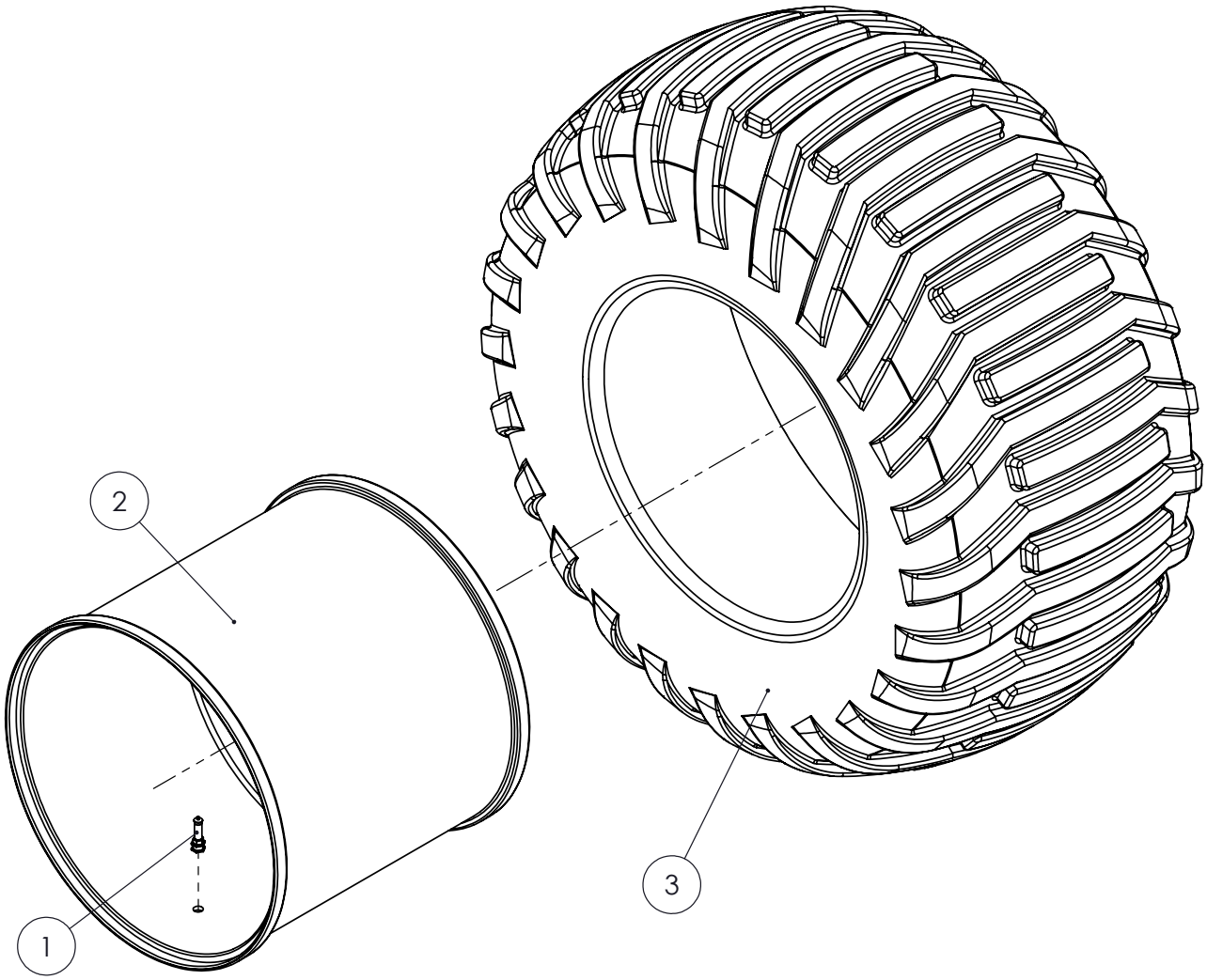


| ITEM NO. | PART NUMBER | DESCRIPTION | QTY. |
|---|---|---|---|
| 1 | 269490 | STEEL VALVE STEM | 1 |
| 2 | 659005 | RIM, 22.5"X20" | 1 |
| 3 | MP12.11073 | TIRE, 600/50R22.5 | 1 |

## WHEEL ASSEMBLY (RH BKT FLOATATION 690621)

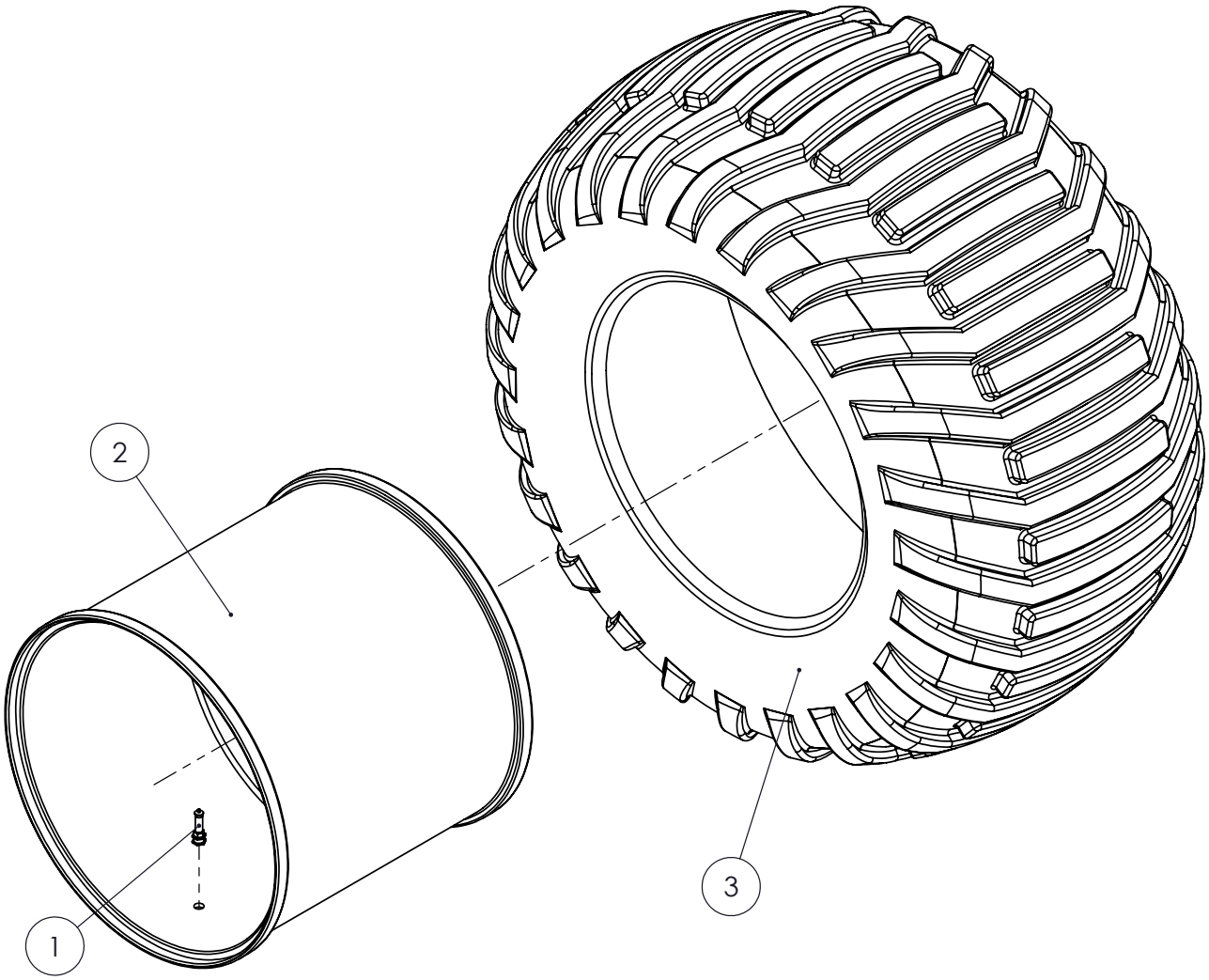


| ITEM NO. | PART NUMBER | DESCRIPTION | QTY. |
|---|---|---|---|
| 1 | 269490 | STEEL VALVE STEM | 1 |
| 2 | 659005 | RIM, 22.5"X20" | 1 |
| 3 | 690619 | TIRE, 600/50R22.5 | 1 |

## WHEEL ASSEMBLY (LH BKT FLOATATION 690622)

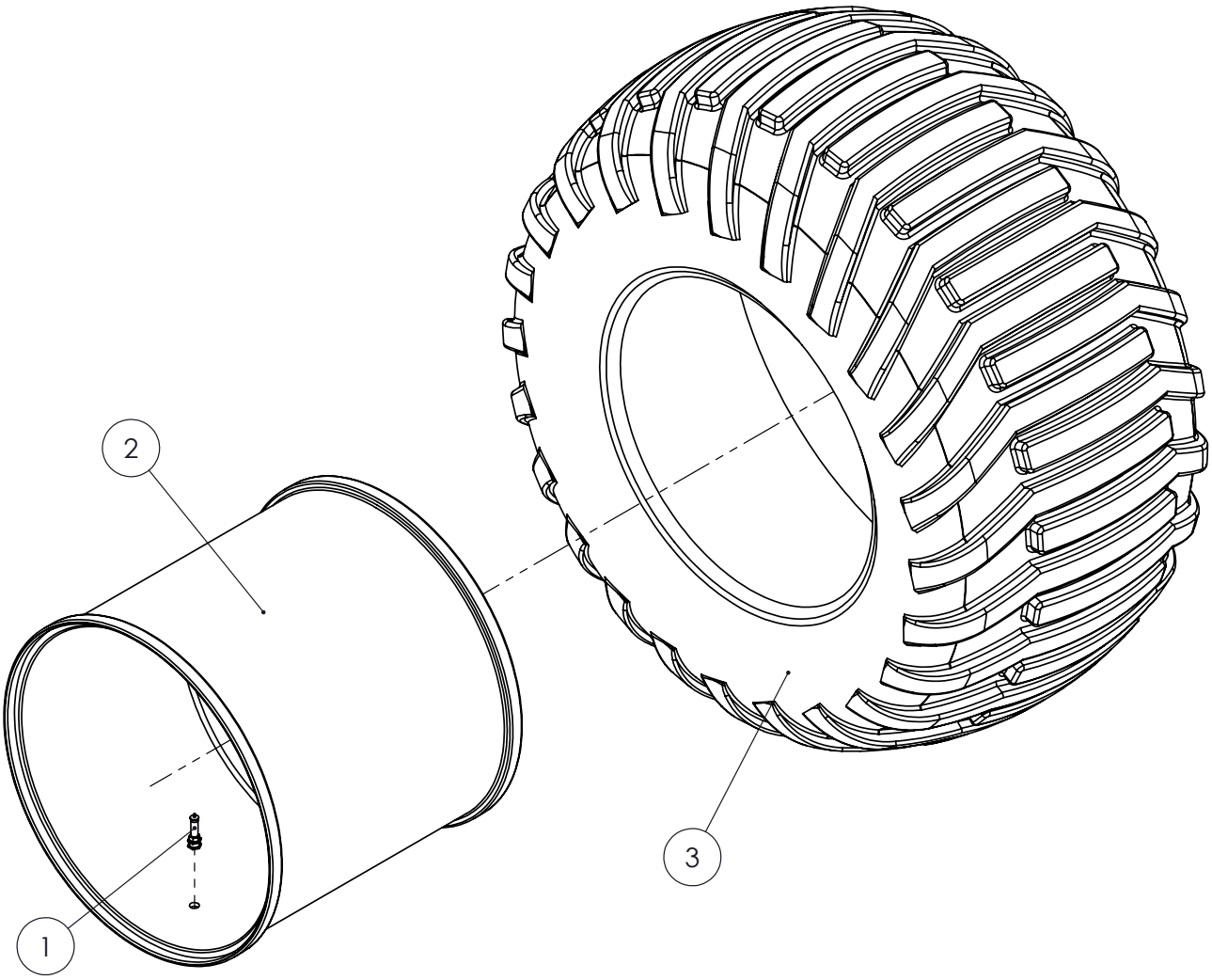


| ITEM NO. | PART NUMBER | DESCRIPTION | QTY. |
|---|---|---|---|
| 1 | 269490 | STEEL VALVE STEM | 1 |
| 2 | 659005 | RIM, 22.5"X20" | 1 |
| 3 | 690619 | TIRE, 600/50R22.5 | 1 |

## APRON CHAIN ASSEMBLY

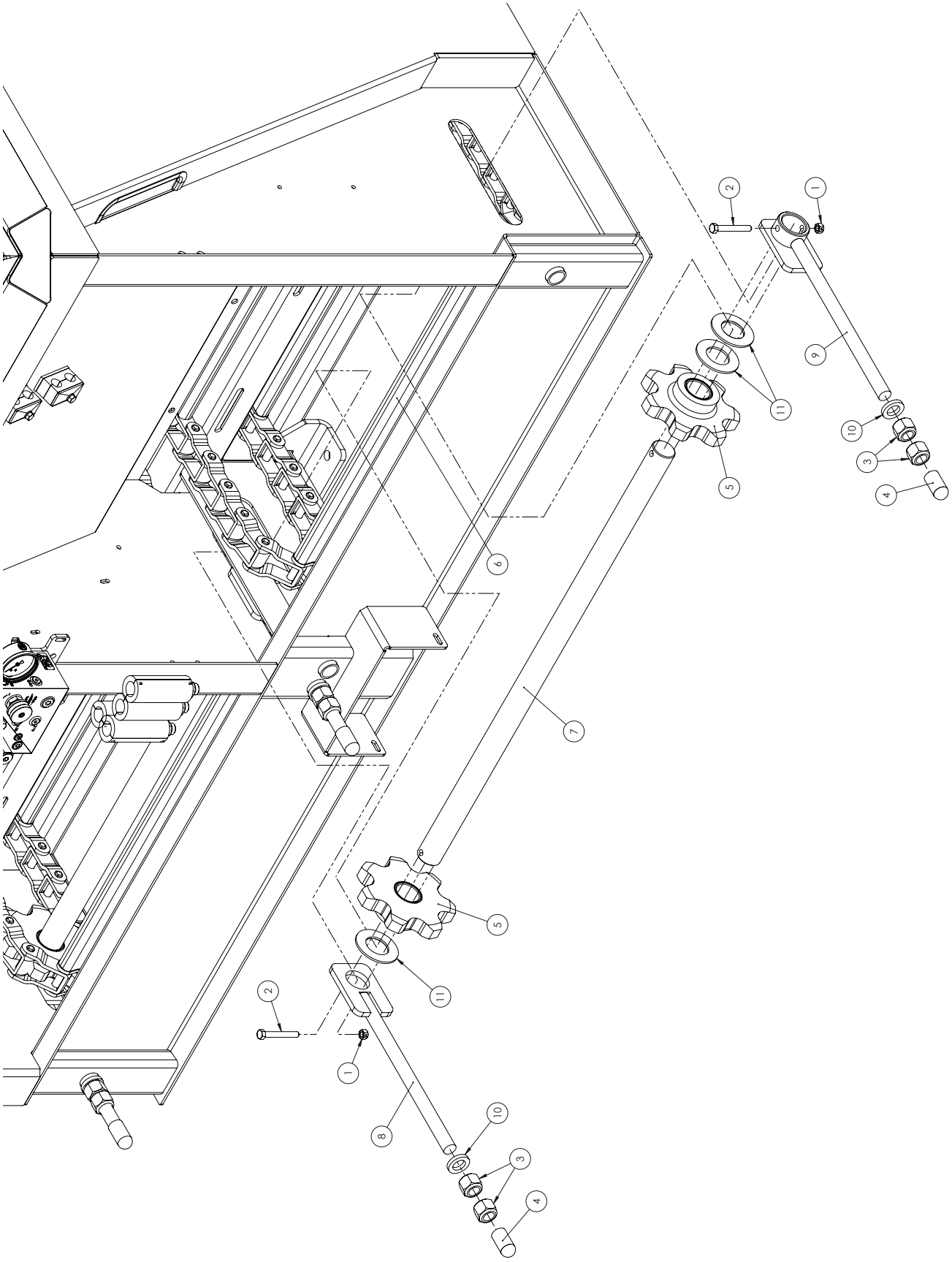

| ITEM NO. | PART NUMBER | DESCRIPTION | QTY. |
|---|---|---|---|
| 1 | 023060 | NUT, LOCK 3/8-16 2 WAY | 4 |
| 2 | 037790 | BOLT, HHCS 3/8-16 X 2 | 4 |
| 3 | 600510 | NUT, NYLOC 7/8-9 GR 8 | 8 |
| 4 | 691088 | RUBBER CAP FOR 7/8" ROD | 4 |
| 5 | 691725 | SPROCKET, IDLER 7 TOOTH 88C | 4 |
| 6* | 691730 | X700 88C CHAIN, COMPLETE | 2 |
| | 691731 | APRON CHAIN WLDT, SERVICE (10 LINKS, 2 SLATS) | - |
| | 691732 | APRON CHAIN WLDT, SERVICE (2 LINKS, 1 SLAT) | |
| | 691739 | APRON CHAIN SLAT (WELD IN) | |
| | 397490P | 88C CONNECTING LINK | |
| | 034360 | COTTER PIN FOR CONNECTING LINK | |
| 7 | 691836 | APRON TENSIONER SHAFT | 2 |
| 8 | H610203 | INSIDE APRON TIGHTENER | 2 |
| 9 | H610206 | OUTSIDE APRON TIGHTENER | 2 |
| 10 | I651239R1 | WASHER, FLAT 29/32 X 1-1/2 | 4 |
| 11 | V063596 | WASHER, FLAT 1-1/2 SAE ZN | 6 |

SERVICE CHAINS INCLUDE CONNECTING LINKS AND COTTER PINS.
COMPLETE APRON CHAINS DON'T INCLUDE CONNECTING LINKS OR COTTER PINS.

COMPLETE APRON CHAINS ARE NOT ELIGIBLE FOR IMMEDIATE WARRANTY SERVICE.

*X700 UNITS INCLUDING AND AFTER S/N AWX700001467 ARE 88C CHAIN & COMPONENTS.
REFER TO MANUAL 690740 FOR PREVIOUS UNITS WITH 667XH CHAIN & COMPONENTS.

## SLOP GATE ASSEMBLY

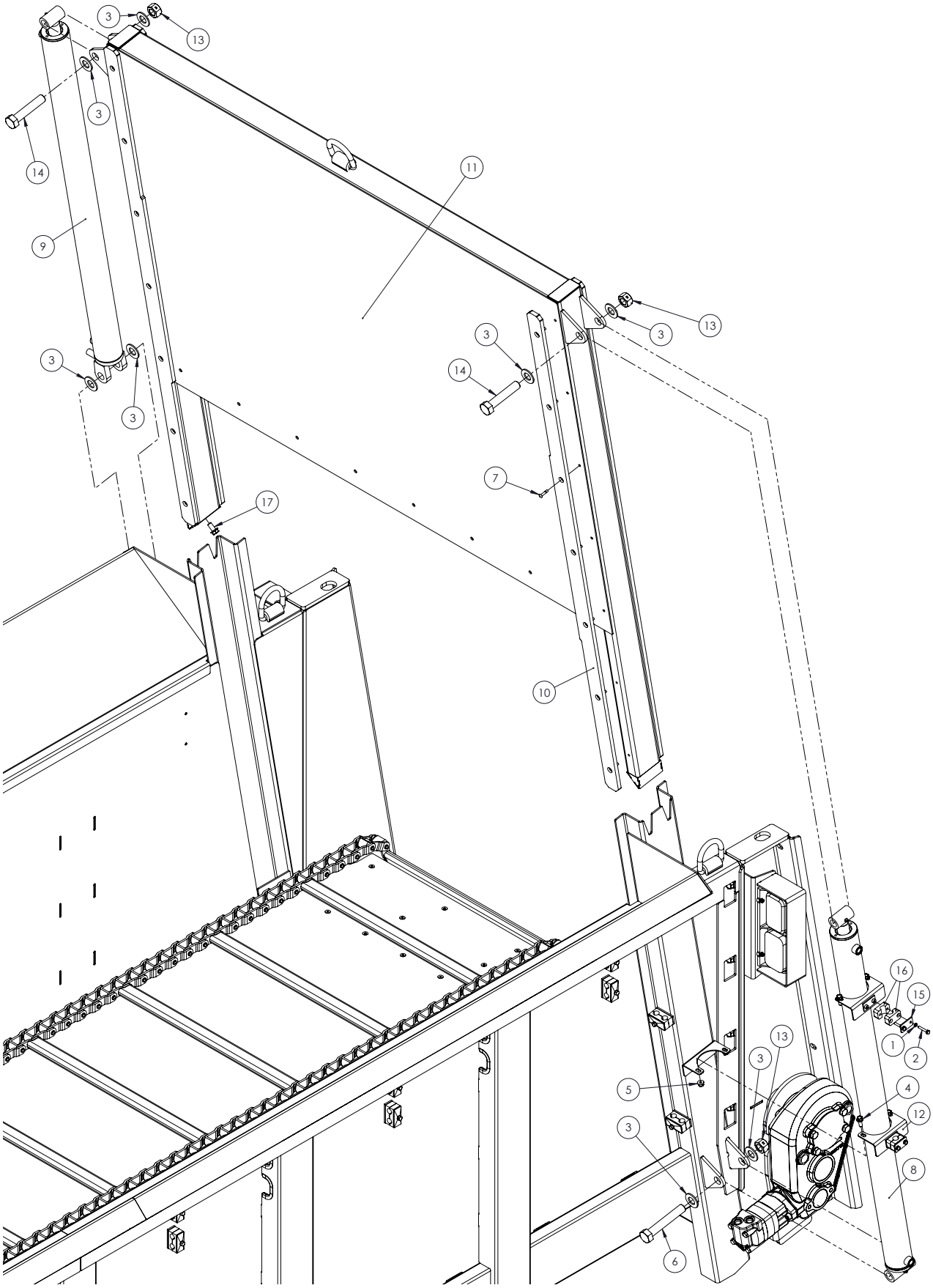

| ITEM NO. | PART NUMBER | DESCRIPTION | QTY. |
|---|---|---|---|
| 1 | 029440 | WASHER, LOCK 1/4 SAE | 8 |
| 2 | 047000 | BOLT, HHCS 1/4-20 X 1-1/2 | 8 |
| 3 | 1107389 * 2 EXTRA | WASHER, FLAT 1 SAE | 10 |
| 4 | 600050 | BOLT, HFH 3/8-16 X 1.00" | 8 |
| 5 | 600120 | NUT, HFH NYLOC 3/8-16 | 8 |
| 6 | 600490 | BOLT, HHCS 1-8 X 6" | 2 |
| 7 | 660570 | 1/4" BLIND RIVET | 28 |
| 8 | 660585 | CYLINDER, HYD | 1 |
| 9 | 660586 * | CYLINDER, HYD SENSOR | 1 |
| | 660585 | CYLINDER, HYD STANDARD | |
| 10 | 660595 | PLASTIC SLIDE, | 4 |
| 11 | 690720 | SLOP GATE WELDMENT, | 1 |
| 12 | 690765 | CYLINDER HOLDER WLDMNT | 4 |
| 13 | 990510 | NUT, LOCK 2-WAY 1-8 | 4 |
| 14 | 991060 | BOLT, HHCS 1-8 X 5 | 2 |
| 15 | HC14-00-3169 | TOP CAP, HOSE CLAMP | 4 |
| 16 | HC14-00-3171 | SECTION, HOSE CLAMP | 8 |
| 17 | MP903952 | HHDBLT - 1/2-13 X 1 WHZ | 2 |
| PART NUMBERS WITH * AFTER ARE ON SCALED UNITS ONLY | | | |

## FLASHING ASSEMBLY

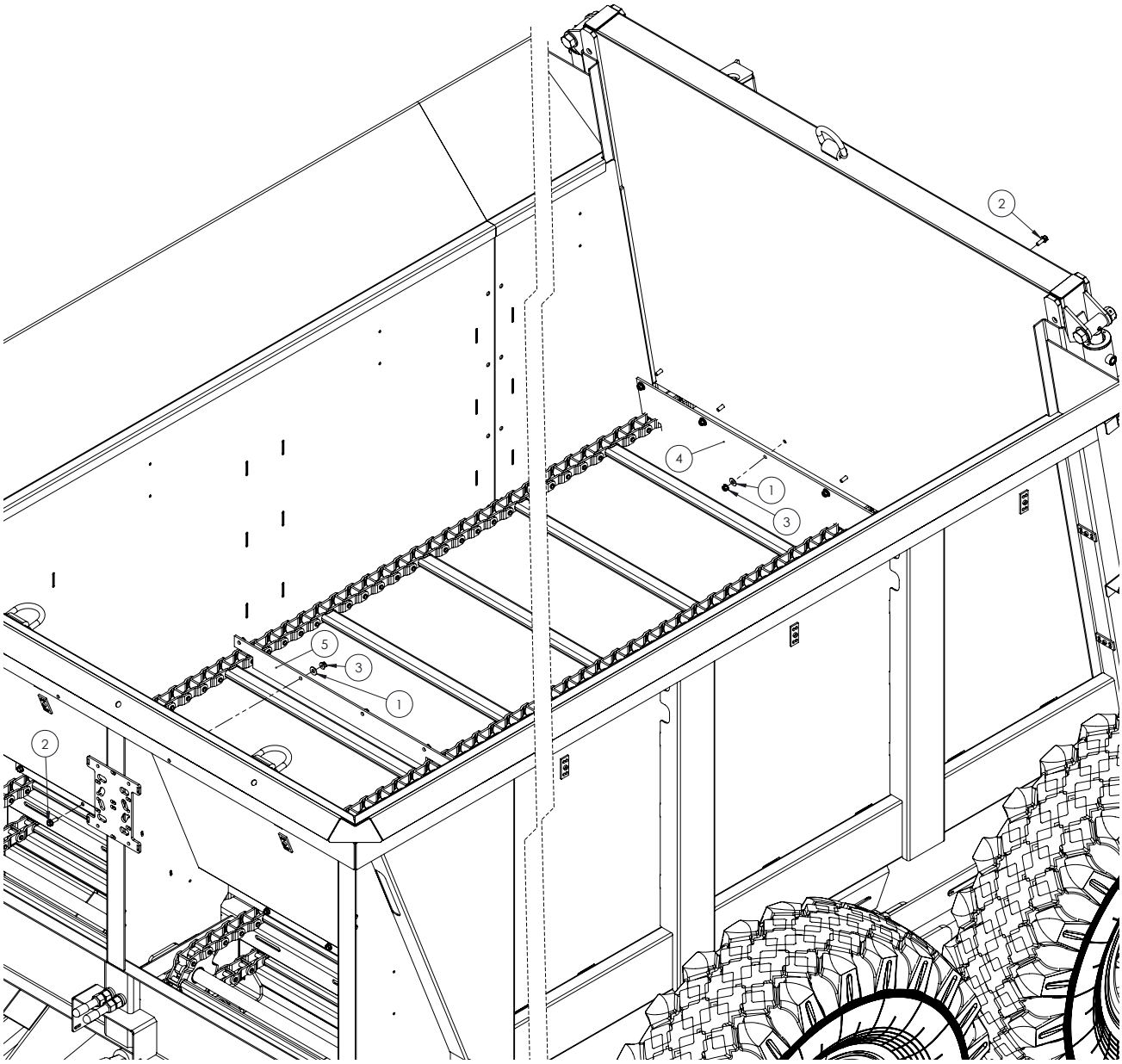

| ITEM NO. | PART NUMBER | DESCRIPTION | QTY. |
|---|---|---|---|
| 1 | 021190 | WASHER, FLAT 3/8 STD | 16 |
| 2 | 600050 | BOLT, HFH 3/8-16 X 1.00" | 16 |
| 3 | 600120 | NUT, HFH NYLOC 3/8-16 | 16 |
| 4 | 691837 | SLOP GATE FLAP, | 1 |
| 5 | 691839 | FRONT FLAP, 88C CHAIN | 1 |

## BEATERS ASSEMBLY

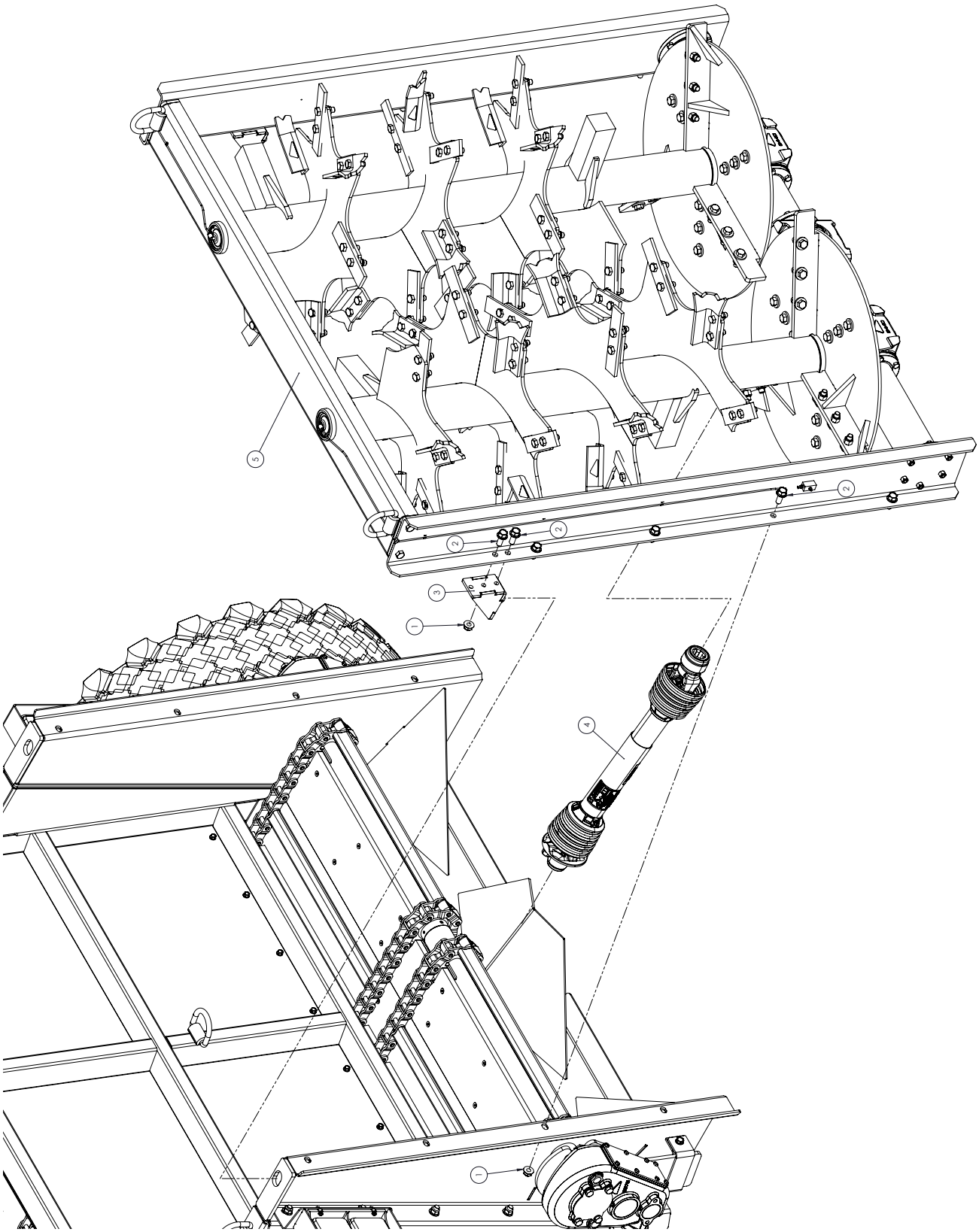

| ITEM NO. | PART NUMBER | DESCRIPTION | QTY. |
|---|---|---|---|
| 1 | 600150 | NUT, HFH NYLOC 5/8-11 | 10 |
| 2 | 600210 | BOLT, HFH 5/8-11 | 12 |
| 3 | 691715 | BEATER LOCATOR | 2 |
| 4 | H140049 | PTO, REAR W/ SHEAR | 1 |
| 5 | H140503 | BEATERS, X700 | 1 |

## BEATERS ASSEMBLY (H140503) (GEN 1)

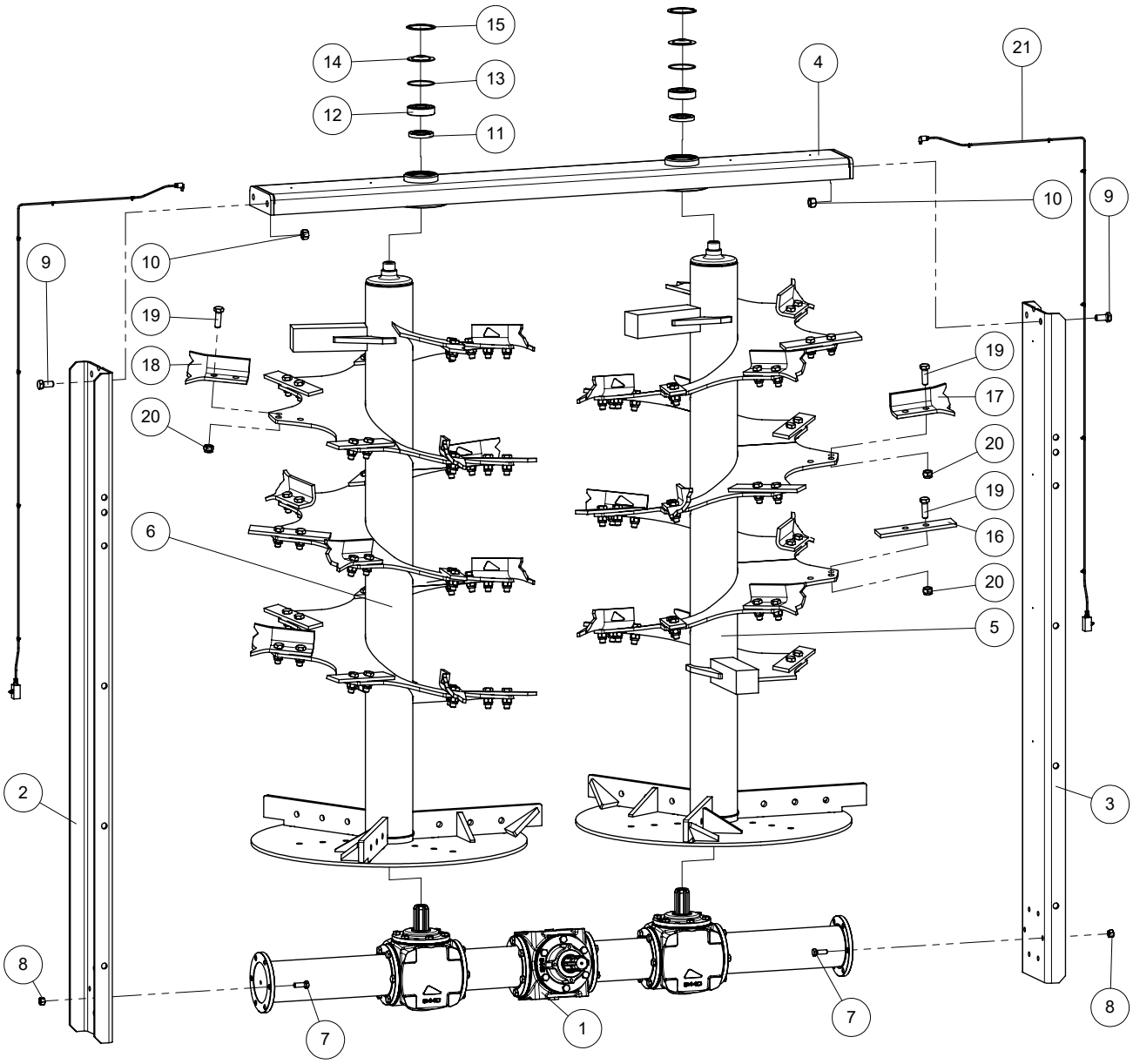

| ITEM NO. | PART NUMBER | DESCRIPTION | QTY. |
|---|---|---|---|
| 1 | H14936 | GEAR BOX SRT8/1830/820-RO | 1 |
| 2 | H14944 | RIGHT PANEL | 1 |
| 3 | H14945 | LEFT PANEL | 1 |
| 4 | H14950 | COMPLETE CROSSBAR | 1 |
| 5 | H19704 | LEFT BEATER | 1 |
| 6 | H19705 | RIGHT BEATER | 1 |
| 7 | H3768 | SCREW,HEX-HD M12X35 | 12 |
| 8 | H4478 | NUT M12 | 12 |
| 9 | H8940 | SCREW, HEX-HD M16X35 | 4 |
| 10 | H3690 | NUT M16 | 4 |
| 11 | H7331 | OIL SEAL 45/72/10 | 2 |
| 12 | H3340 | BEARING 1307 E | 2 |
| 13 | H3462 | O-RING 176 | 2 |
| 14 | H7724 | COVERPLATE | 2 |
| 15 | H3435 | CIRCLIP I 80 | 2 |
| 16 | H9569 | KNIFE | 24 |
| 17 | H14626 | RIGHT BLADE | 11 |
| 18 | H14627 | LEFT BLADE | 11 |
| 19 | H9802 | SCREW, HEX-HD M16X1.5X50 | 92 |
| 20 | H9113 | NUT M16X1.5 | 92 |
| 21 | H14952 | LUBRIFICATION KIT | 1 |

## BEATERS ASSEMBLY (H140503) (GEN 2)

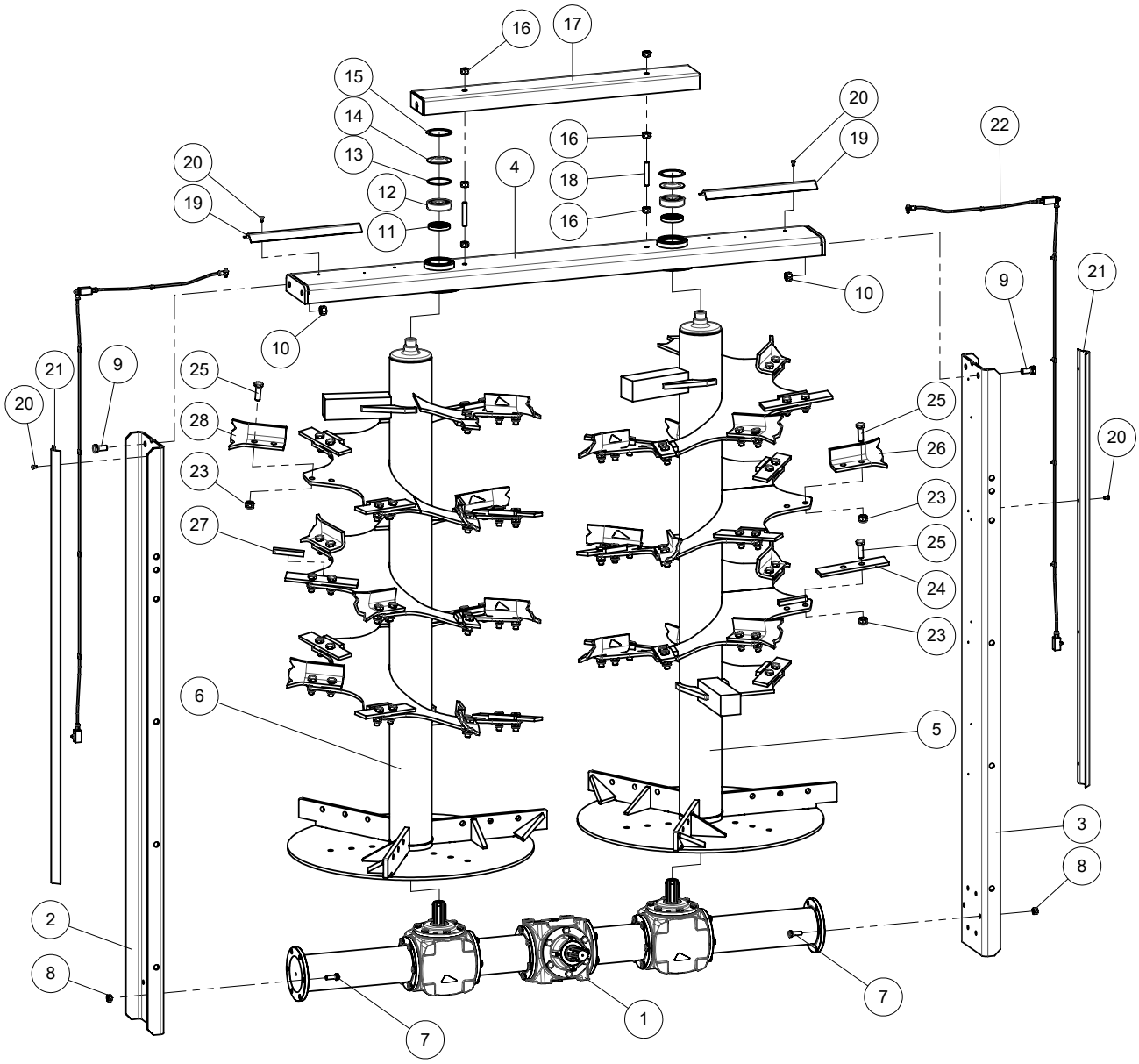

| ITEM NO. | PART NUMBER | DESCRIPTION | QTY. |
|---|---|---|---|
| 1 | H14936 | GEARBOXES SRT8/1830 | 1 |
| 2 | H21320 | RIGHT PANEL | 1 |
| 3 | H21321 | LEFT PANEL | 1 |
| 4 | H21322 | COMPLETE CROSSBAR | 1 |
| 5 | H21324 | LEFT BEATER | 1 |
| 6 | H21325 | RIGHT BEATER | 1 |
| 7 | H3768 | SCREW,HEX-HD M12X35 | 12 |
| 8 | H4478 | NUT M12 | 12 |
| 9 | H8940 | SCREW, HEX-HD M16X35 | 4 |
| 10 | H3690 | NUT M16 | 4 |
| 11 | H7331 | OIL SEAL 45/72/10 | 2 |
| 12 | H3340 | BEARING 1307 E | 2 |
| 13 | H3462 | O-RING 176 | 2 |
| 14 | H7724 | COVERPLATE | 2 |
| 15 | H3435 | CIRCLIP I 80 | 2 |
| 16 | H1799 | NUT M14 | 6 |
| 17 | H21327 | COVER | 1 |
| 18 | H9859 | THREADED BAR M14X80 | 2 |
| 19 | H21326 | PROTECTION L=391 | 2 |
| 20 | H3283 | SCREW, HEX-HD M6X12 | 12 |
| 21 | H18497 | PROTECTION L=1482 | 2 |
| 22 | H21328 | LUBRIFICATION KIT NYLON Ø6 | 1 |
| 23 | H9113 | NUT M16X1.5 | 92 |
| 24 | H9569 | KNIFE | 24 |
| 25 | H9802 | SCREW, HEX-HD M16X1.5X50 | 92 |
| 26 | H14626 | RIGHT BLADE | 11 |
| 27 | H14619 | REINFORCEMENT | 24 |
| 28 | H14627 | LEFT BLADE | 11 |

## BEATER GEARS ASSEMBLY (H14936)

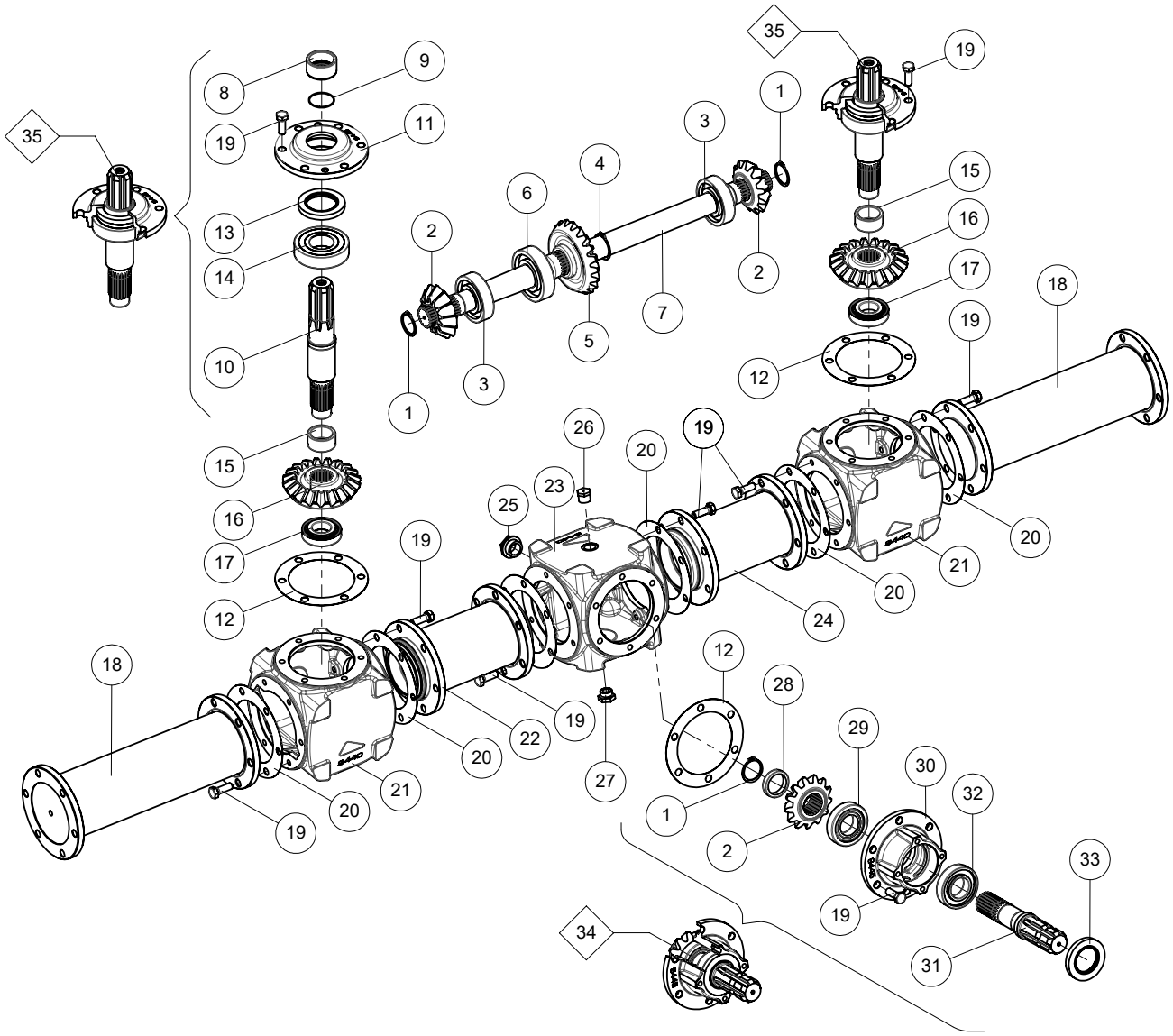

| ITEM NO. | PART NUMBER | DESCRIPTION | QTY. |
|---|---|---|---|
| 1 | H3426 | CIRCLIP E 40 | 3 |
| 2 | H9476 | PINION Z=13 | 3 |
| 3 | H3346 | BEARING 6308 | 2 |
| 4 | H3427 | CIRCLIP E 45 | 1 |
| 5 | H9502 | GEAR Z=20 | 1 |
| 6 | H7478 | BEARING 6309 | 1 |
| 7 | H14937 | SHAFT | 1 |
| 8 | H9524 | SPACER | 2 |
| 9 | H9926 | O-RING 2175 | 2 |
| 10 | H9507 | SHAFT | 2 |
| 11 | H9446 | CALOTTE | 2 |
| 12 | H9536 | GASKET | 3 |
| 13 | H7480 | OIL SEAL 55/85/10-DL | 2 |
| 14 | H13102 | BEARING 6309-2RS | 2 |
| 15 | H9516 | SPACER | 2 |
| 16 | H9477 | GEAR Z=20 | 2 |
| 17 | H3354 | BEARING 30207 | 2 |
| 18 | H14940 | SPACER L=405 | 2 |
| 19 | H3768 | SCREW,HEX-HD M12X35 | 54 |
| 20 | H9525 | GASKET | 6 |
| 21 | H9441 | HOUSING | 2 |
| 22 | H14938 | SPACER L=210 | 1 |
| 23 | H9440 | HOUSING | 1 |
| 24 | H14939 | SPACER L=210 | 1 |
| 25 | H9179 | OIL LEV. INDIC. Ø1"GAS ALL. | 1 |
| 26 | H9706 | OIL BREATHER PLUG Ø1/2"GAS | 1 |
| 27 | H9707 | OIL PLUG Ø1/2"GAS | 1 |
| 28 | H12629 | SPACER | 1 |
| 29 | H4910 | BEARING 30208 | 1 |
| 30 | H9445 | HUB | 1 |
| 31 | H9509 | SHAFT | 1 |
| 32 | H3342 | BEARING 6208 | 1 |
| 33 | H9537 | OIL SEAL 48/80/10-DL | 1 |
| 34 | H12150 | COMPLETE HUB | 1 |
| 35 | H9539 | COMPLETE CALOTTE | 2 |

## LITTER KIT (OPTIONAL) (88C)

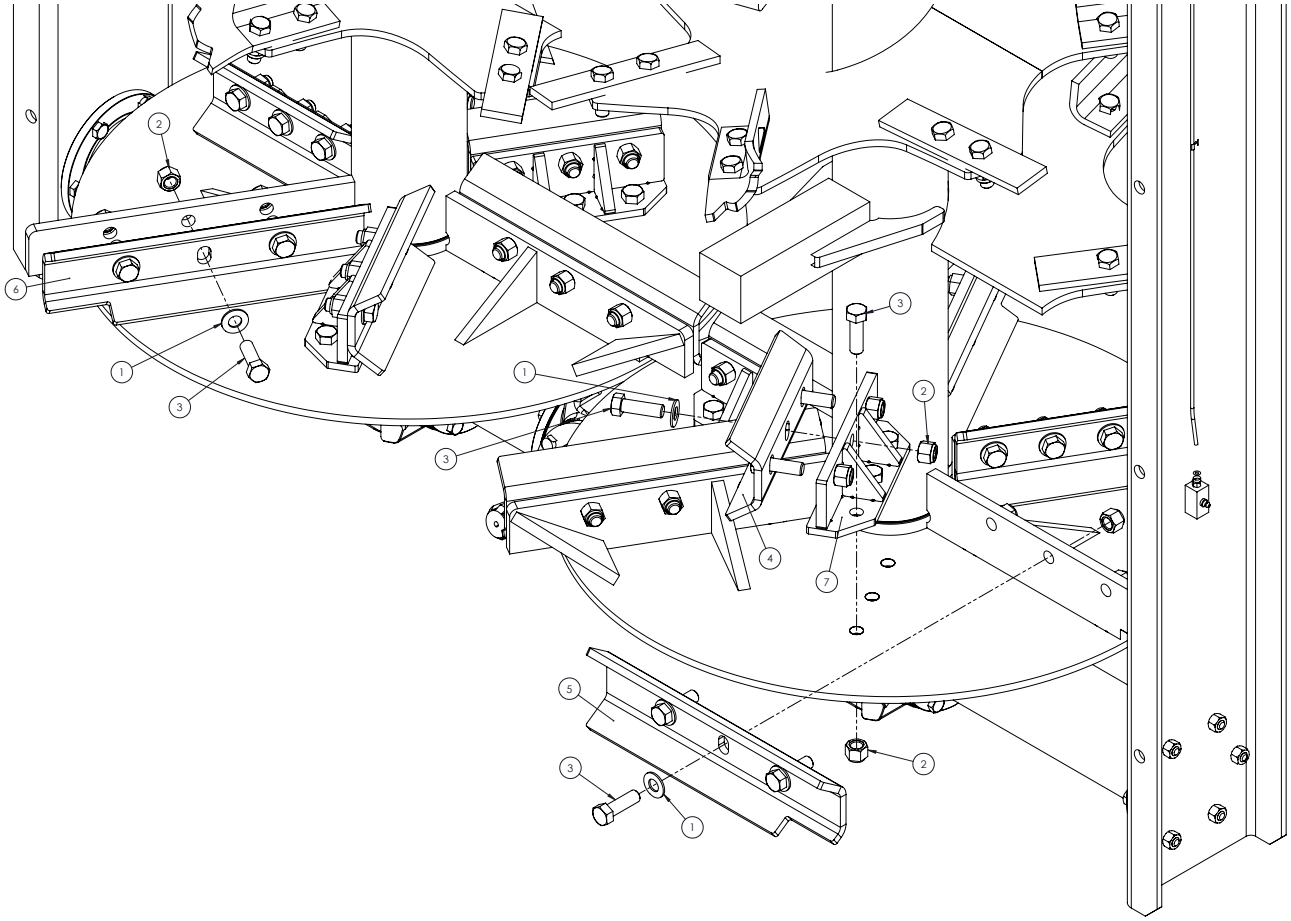

| ITEM NO. | PART NUMBER | DESCRIPTION | QTY. |
|---|---|---|---|
| 1 | 035210 | WASHER, FLAT 5/8 | 36 |
| 2 | 1100840 | NUT, ESNA 5/8-18 | 54 |
| 3 | 213250 | BOLT, HHCS 5/8-18 | 54 |
| 4 | 691030 | SHORT SCOOP KNIFE | 6 |
| 5 | 691031 | LONG SCOOP KNIFE LH | 3 |
| 6 | 691032 | LONG SCOOP KNIFE RH | 3 |
| 7 | 691033 | SHORT SCOOP BRACE | 6 |

**SHAFT ASSEMBLY (H140049)**

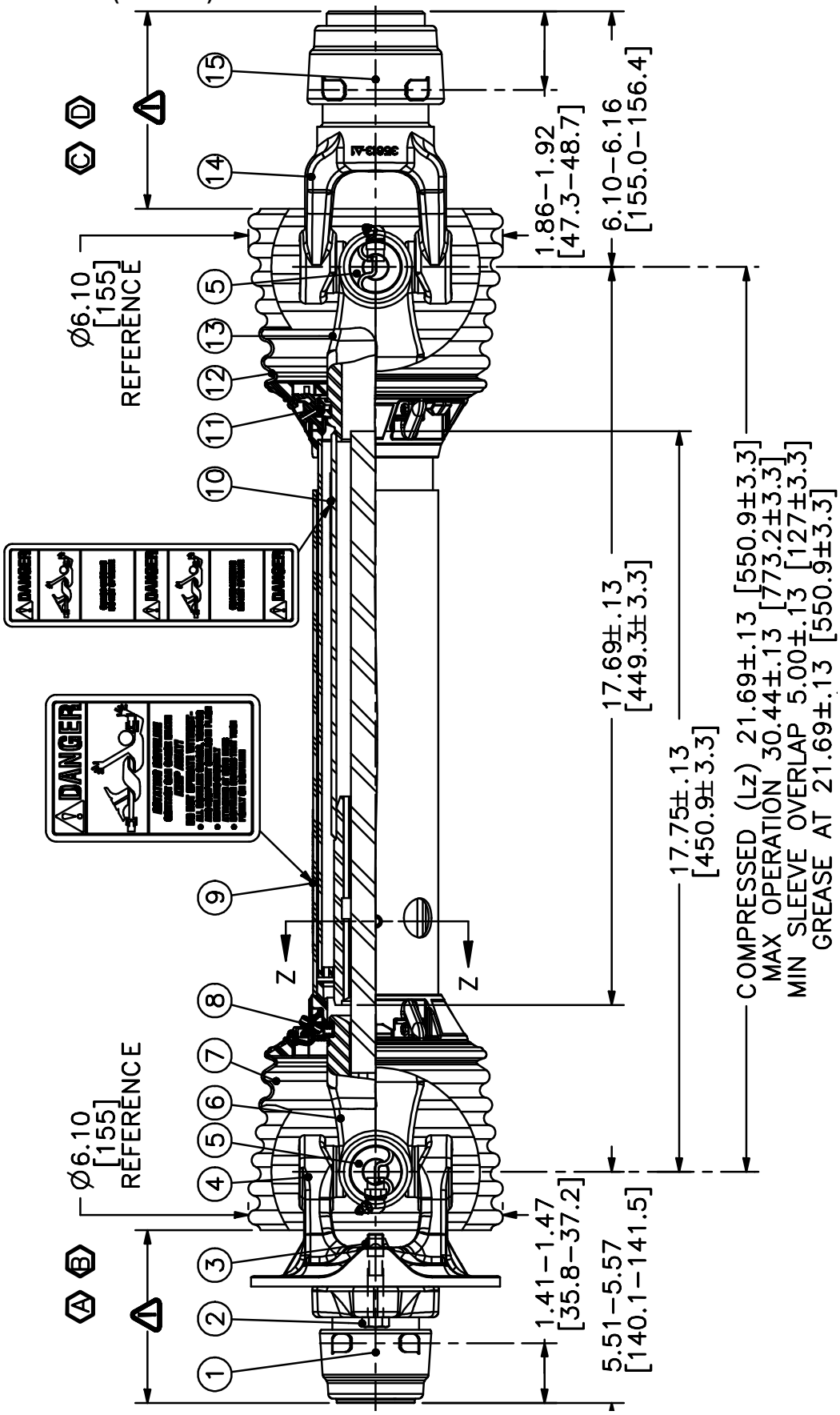

| ITEM NO. | PART NUMBER | DESCRIPTION | QTY. |
|---|---|---|---|
| A | H93-25686 | JOINT & SHAFT HALF ASM. W/GUARD | 1 |
| B | H95-25686 | JOINT & SHAFT HALF ASM. | 1 |
| C | H92-25686 | JOINT & TUBE HALF ASM. W/GUARD | 1 |
| D | H94-25686 | JOINT & TUBE HALF ASM. | 1 |
| 1 | H26-15120 | SSL/AUTO-LOK REPAIR KIT | 1 |
| 2 | H11-10483 | BOLT. 3/8-16 X 2.00 LG., GR. 5 | 1 |
| 3 | H11-10035 | LOCKNUT. 3/8-16 | 1 |
| 4 | H40-10139 | BALL SHEAR ASM. | 1 |
| 5 | H03-10045 | 35R CROSS KIT | 2 |
| 6 | H99-25686 | YOKE & SHAFT (1.19 SQ.) | 1 |
| 7 | H97-25686 | OUTER GUARD | 1 |
| 8 | H19-11146 | GUARD REPAIR KIT | 1 |
| 9 | H13-10021 | SAFETY SIGN | 1 |
| 10 | H13-10022 | SAFETY SIGN | 1 |
| 11 | H19-11147 | GUARD REPAIR KIT | 1 |
| 12 | H96-25686 | INNER GUARD | 1 |
| 13 | H98-25686 | YOKE, TUBE & SLIP SLEEVE | 1 |
| 14 | H35610-1005 | SAFETY SLIDE LOCK ASM. | 1 |
| 15 | H26-13387 | SSL/AUTO-LOK REPAIR KIT | 1 |

## ROCK GUARD ASSEMBLY

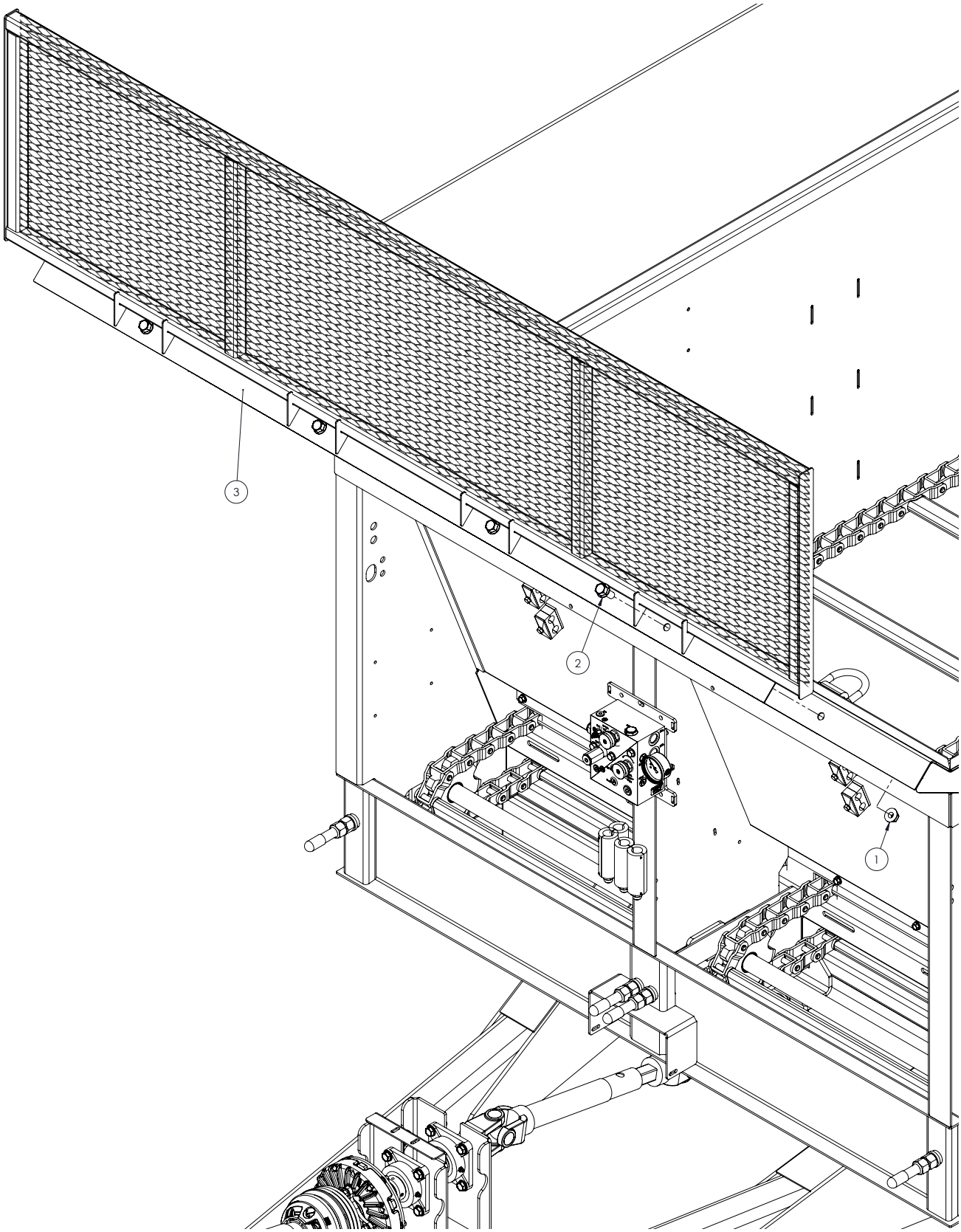

| ITEM NO. | PART NUMBER | DESCRIPTION | QTY. |
|---|---|---|---|
| 1 | 600150 | NUT, HFH NYLOC 5/8-11 | 4 |
| 2 | 600210 | BOLT, HFH 5/8-11 | 4 |
| 3 | 690755 | ROCK GUARD WELDMENT, | 1 |

## SHIELDS ASSEMBLY

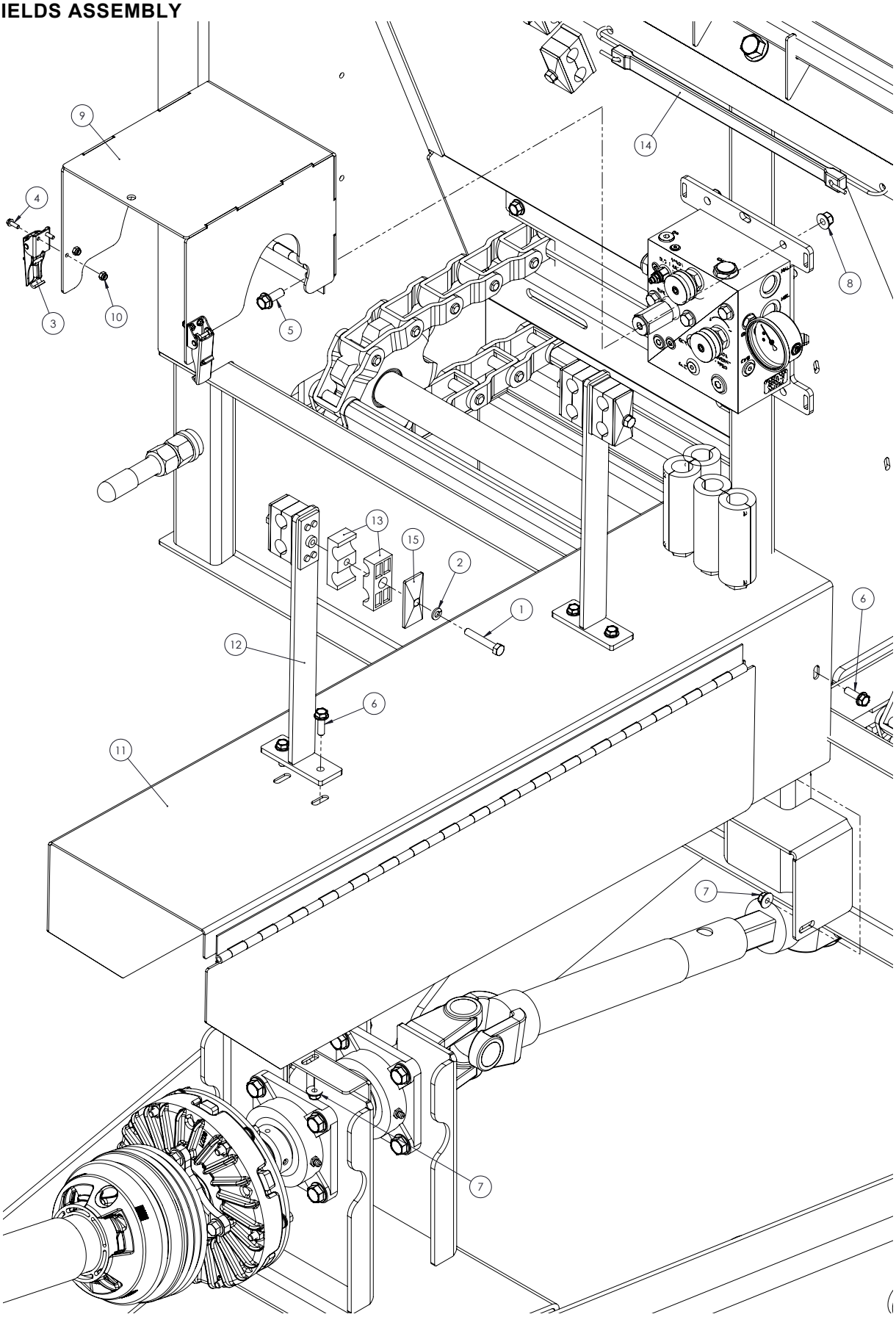

| ITEM NO. | PART NUMBER | DESCRIPTION | QTY. |
|---|---|---|---|
| 1 | 017120 | BOLT, HHCS 5/16-18 X 2 G | 4 |
| 2 | 023620 | WASHER, LOCK 5/16 | 4 |
| 3 | 163400 | LATCH, TENSION 17L | 2 |
| 4 | 600015 | BOLT, HFH #8-32 X 0.50" | 4 |
| 5 | 600050 | BOLT, HFH 3/8-16 X 1.00" | 2 |
| 6 | 600060 | BOLT, HFH 5/16-18 X 1" | 6 |
| 7 | 600110 | NUT, HFH NYLOC 5/16-18 | 6 |
| 8 | 600120 | NUT, HFH NYLOC 3/8-16 | 2 |
| 9 | 690690 | SHIELD WLDT, BLOCK | 1 |
| 10 | 710802 | NUT, LOCK #8-32 NYLOCK | 4 |
| 11 | H140025 | PTO SHIELD ASSY | 1 |
| 12 | H160022 | LONG HOSE HOLDER | 2 |
| 13 | MP17.01144 | SECTION, HOSE CLAMP | 8 |
| 14 | MP906533 | RUBBER STRAP, 15" | 1 |
| 15 | U51800177 | TOP CAP, HOSE CLAMP | 4 |

## MANUAL ASSEMBLY

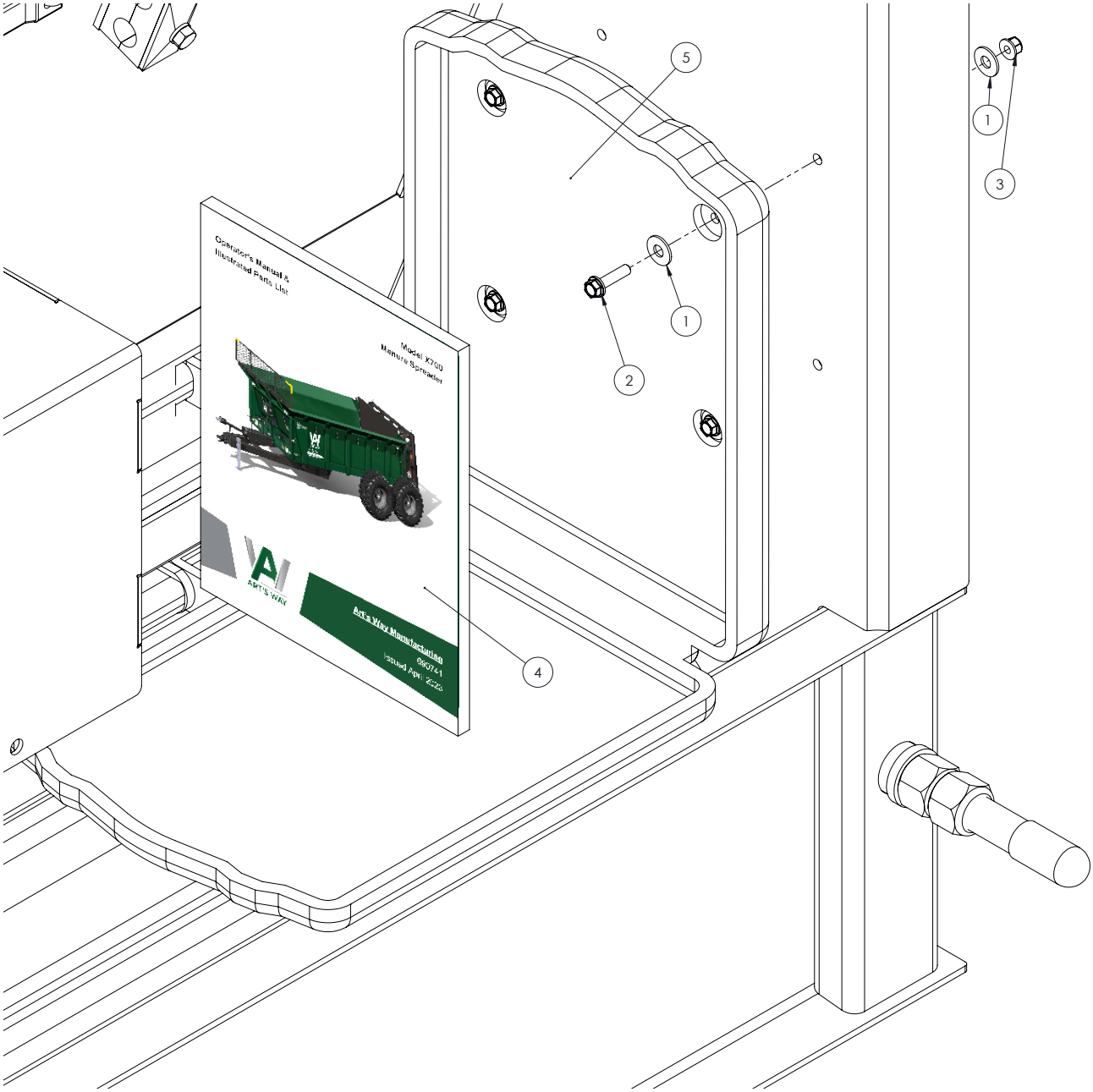

| ITEM NO. | PART NUMBER | DESCRIPTION | QTY. |
|---|---|---|---|
| 1 | 023260 | WASHER, FLAT 1/4 STD | 8 |
| 2 | 600020 | BOLT, HFH 1/4-20 X 1.00" | 4 |
| 3 | 600100 | NUT, HFH NYLOC 1/4-20 | 4 |
| 4 | 690741 | MANUAL, X700 88C OPM+IPL | 1 |
| 5 | 720900 | STORAGE BOX, MANUAL FLAT | 1 |

## DECALS ASSEMBLY

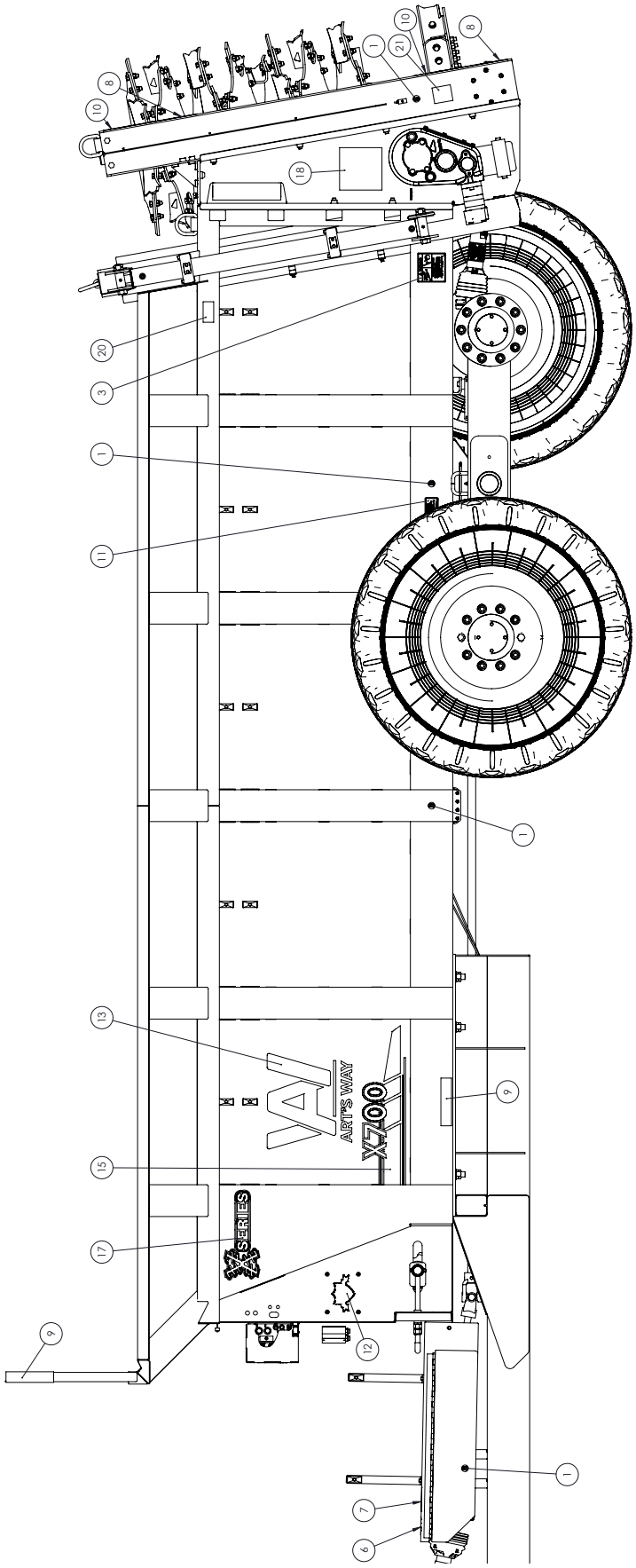

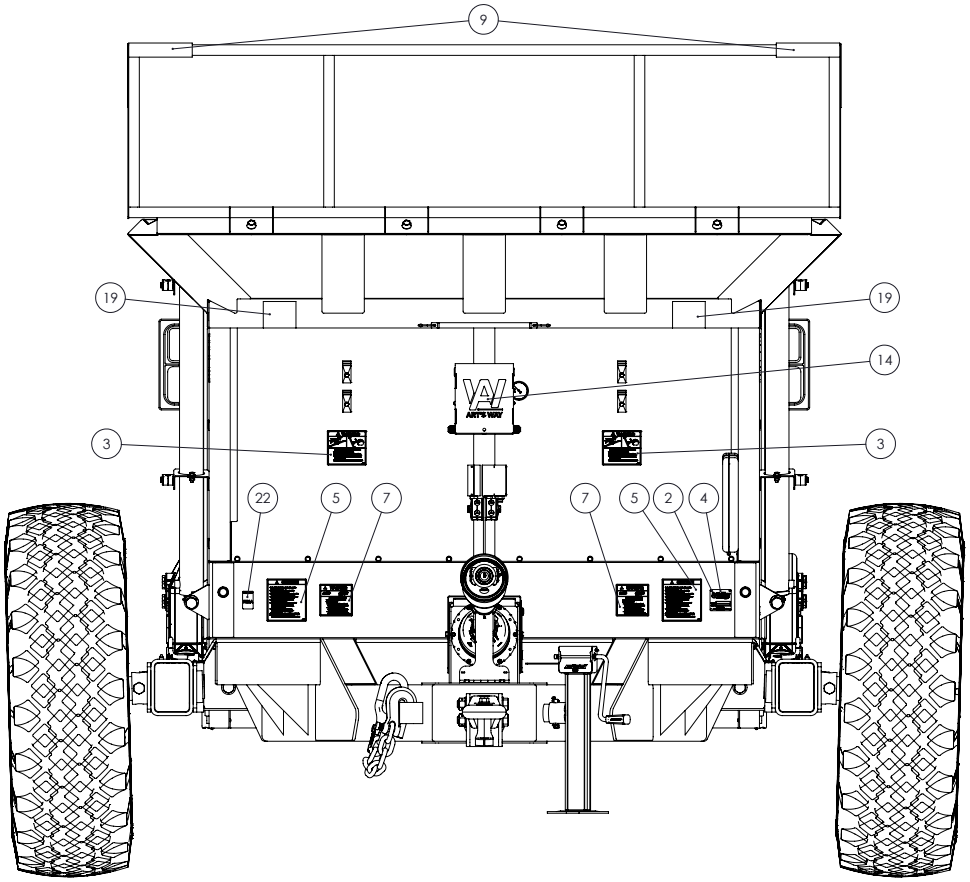


| ITEM NO. | PART NUMBER | DESCRIPTION | QTY. |
|---|---|---|---|
| 1 | 146670 | DECAL, GREASE SYMBOL | 6 |
| 2 | 204510 | NAIL, 1/4" GRIP | 4 |
| 3 | 346310 | DECAL, WARNING HIGH PRESSURE | 4 |
| 4 | 355600 | TAG, SERIAL NUMBER PLATE | 1 |
| 5 | 368040 | DECAL, WARNING MOVING PART | 2 |
| 6 | 384020 | DECAL, DANGER 1050 RPM | 1 |
| 7 | 467450 | DECAL, WARNING | 3 |
| 8 | 476450 | TAPE, RED RETROREFLECTIVE | 4 |
| 9 | 476460 | TAPE, YELLOW RETROREFLECTIVE | 6 |
| 10 | 476470 | TAPE, RED-ORANGE FLORESCENT | 4 |
| 11 | 597390 | DECAL, IMPORTANT | 2 |
| 12 | 608085 | DECAL, MADE IN AMERICA | 2 |
| 13 | 720105 | DECAL, NEW ARTS WAY LOGO | 2 |
| 14 | 720120 | DECAL, NEW ARTS WAY LOGO | 1 |
| 15 | 720810 | DECAL, X700, LH | 1 |
| 16 | 720815 | DECAL, X700, RH | 1 |
| 17 | 720830 | DECAL, "X" SERIES | 2 |
| 18 | HJ22-00-0080 | DECAL, DANGER | 2 |
| 19 | HJ22-00-0091 | DECAL, THROWN | 2 |
| 20 | HJ22-00-0113 | DECAL, HYDRAULIC | 2 |
| 21 | HJ22-00-0114 | DECAL, ROTATING | 2 |
| 22 | K18534203 | DECAL, FEMA | 1 |

**SCALE ASSEMBLY (ALL)**

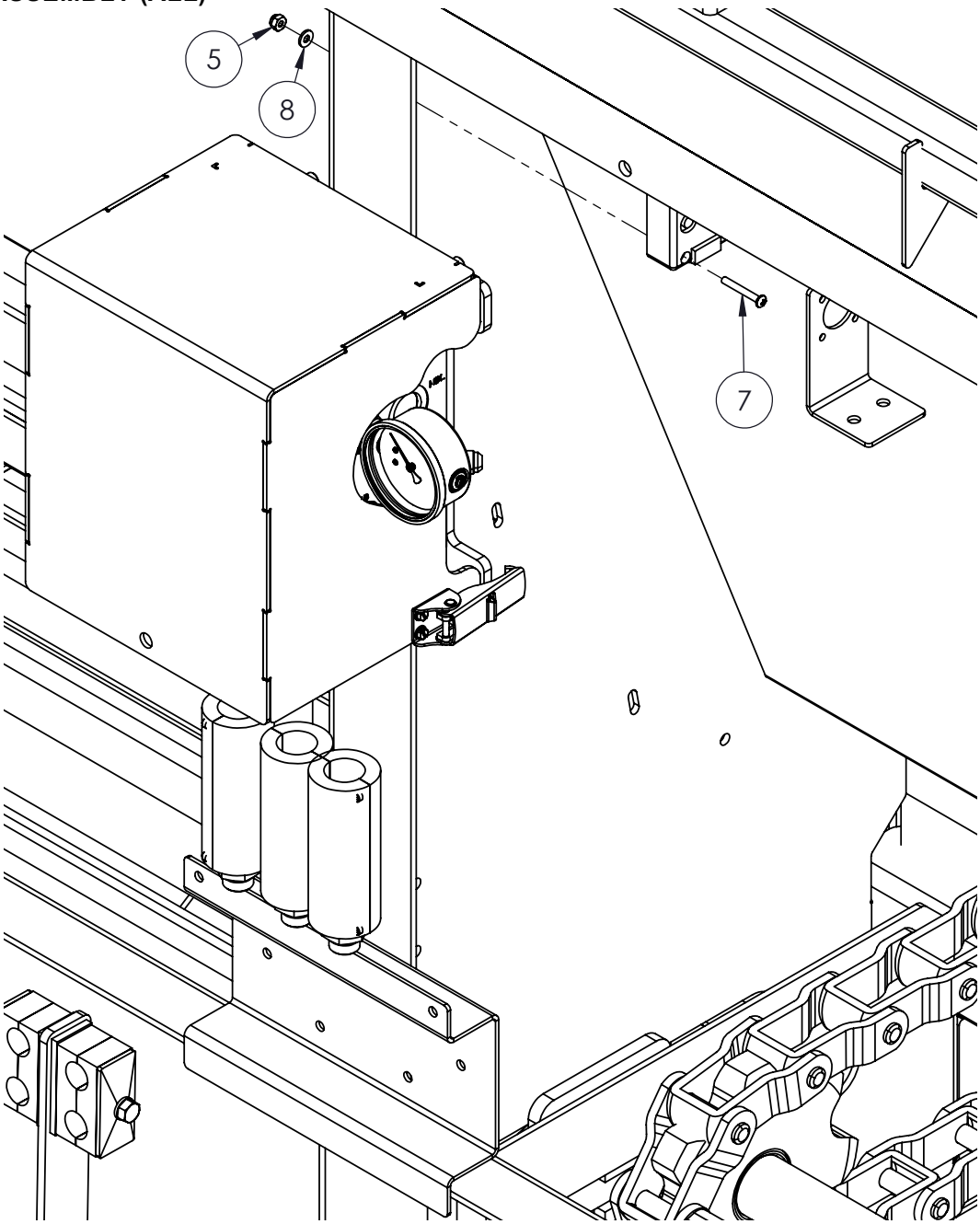


| ITEM NO. | PART NUMBER | DESCRIPTION | QTY. |
|---|---|---|---|
| NOT SHOWN | 597430 * | 407659 J-BLOCK KIT | 1 |
| | 597440 * | 146698 10' CABLE | 1 |
| | 597450 * | 840459 MOUNTING BRACKET | 1 |
| | 691046 * | 408473 30' CABLE | 4 |
| 5 | 710802 * | NUT, LOCK #8-32 NYLOCK | 3 |
| NOT SHOWN | H200126 * | BULKHEAD MOUNT | 1 |
| 7 | P98315 * | SCREW, RHMS 8-32 X 1-1/4 | 3 |
| 8 | P99544 * | WASHER, FLAT 8-32 ZN | 3 |
| PART NUMBERS WITH * AFTER ARE ON SCALED UNITS ONLY | | | |

## SCALE ASSEMBLY (RAVEN ONLY)

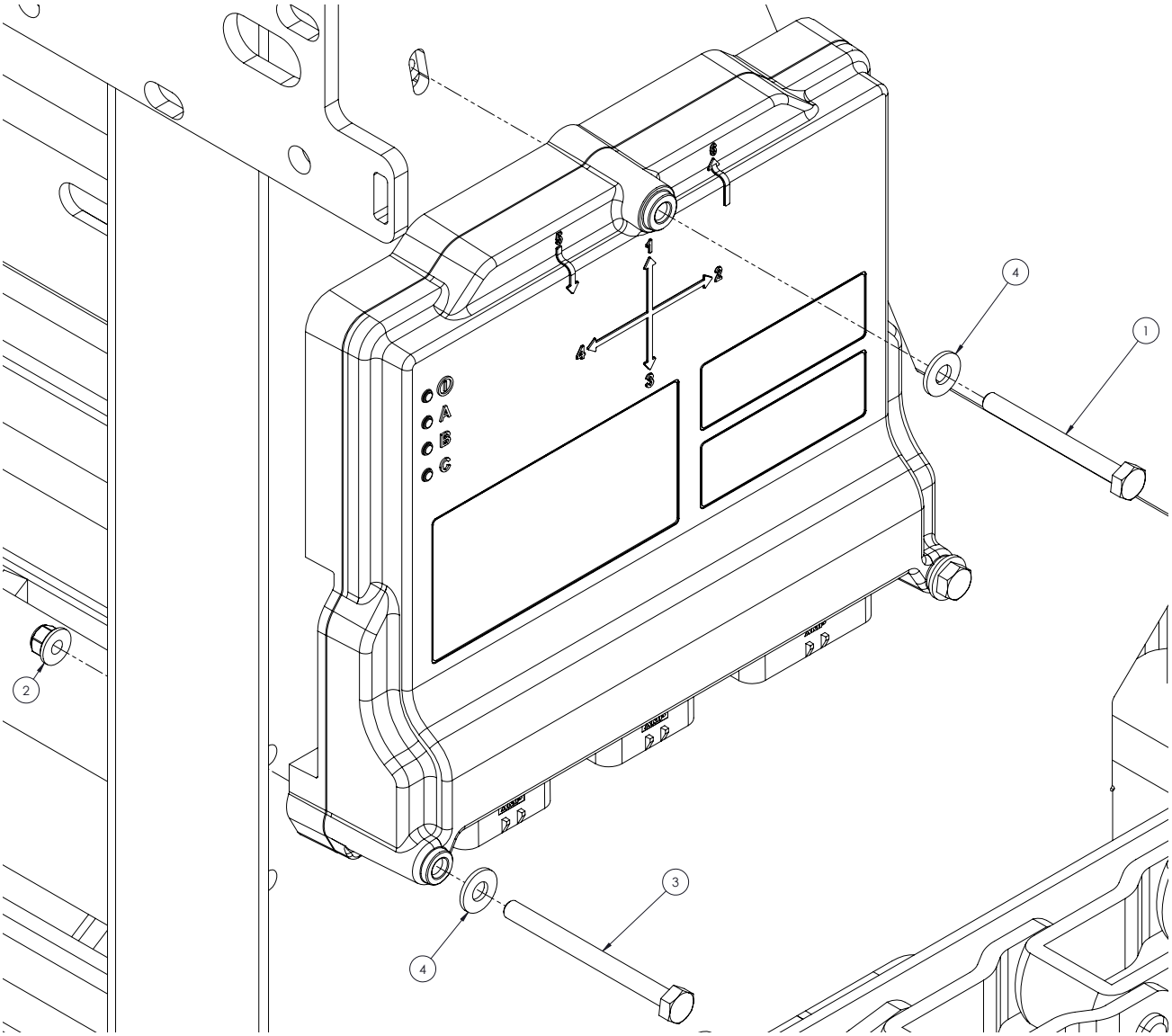


| ITEM NO. | PART NUMBER | DESCRIPTION | QTY. |
|---|---|---|---|
| 1 | 031560 * | BOLT, HHCS 1/4-20 X 2-1/2 | 1 |
| 2 | 600100 * | NUT, HFH NYLOC 1/4-20 | 3 |
| 3 | G146609 * | BOLT, HHCS 1/4-20 X 3 | 2 |
| 4 | I120392 * | WASHER, FLAT 5/16 | 3 |
| PART NUMBERS WITH * AFTER ARE ON SCALED UNITS ONLY | | | |

**SCALE DIAGRAM (GT400)**

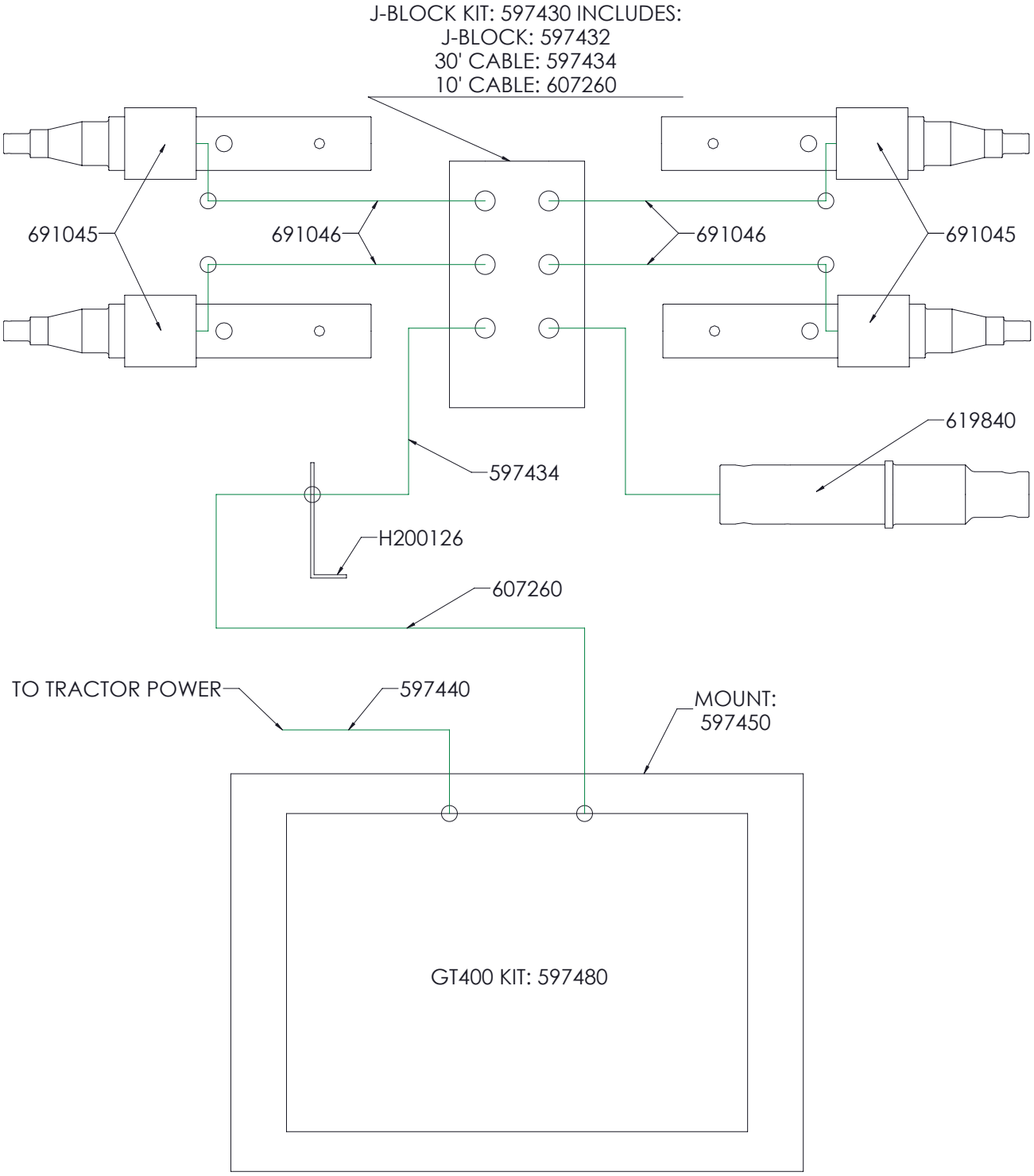

## SCALE DIAGRAM (NT560)

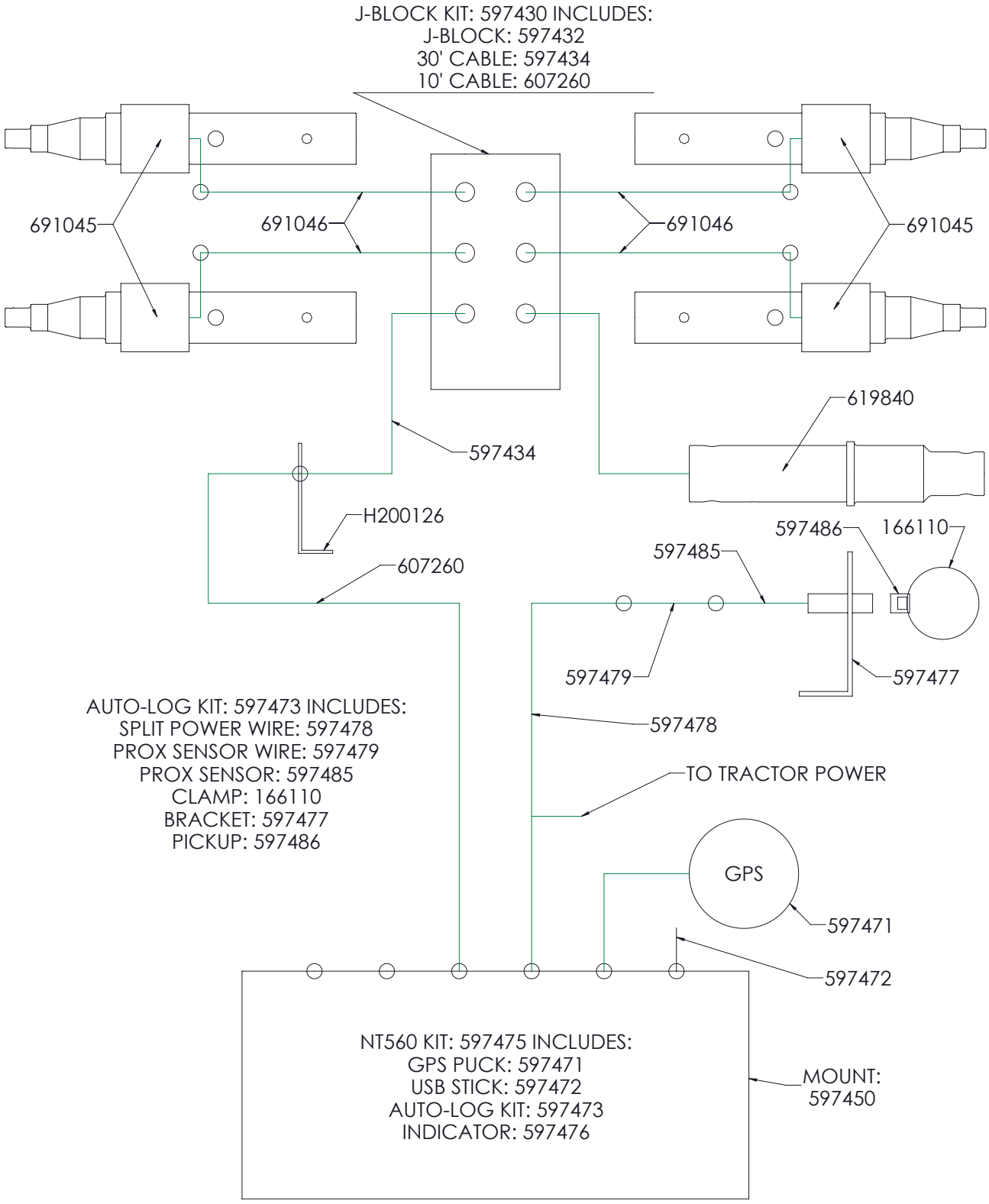

## SCALE DIAGRAM (RAVEN RCM-LVL3 ISOBUS)

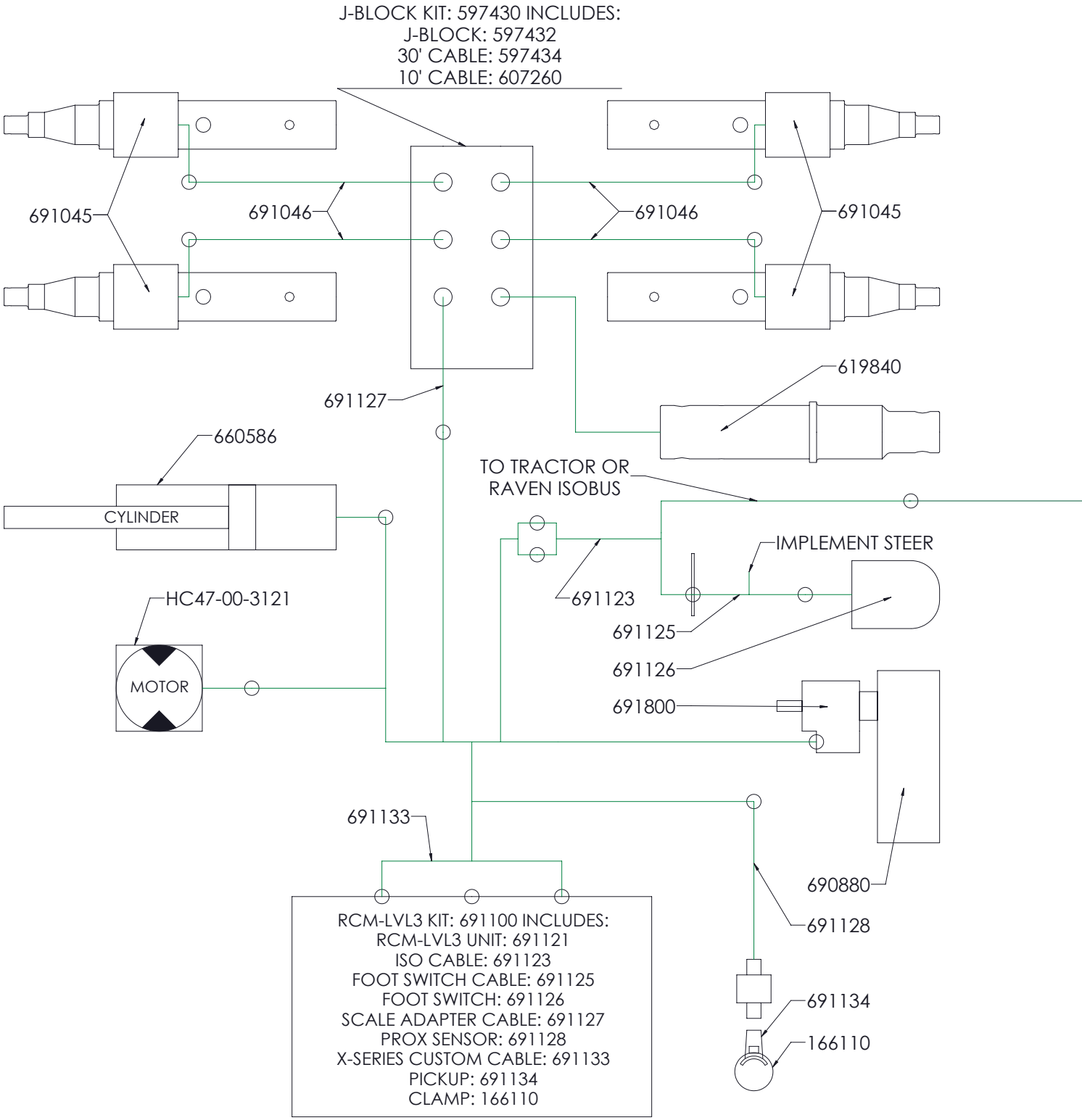

## SCALE DIAGRAM (RAVEN ISOBUS CR7 INDICATOR & GPS)

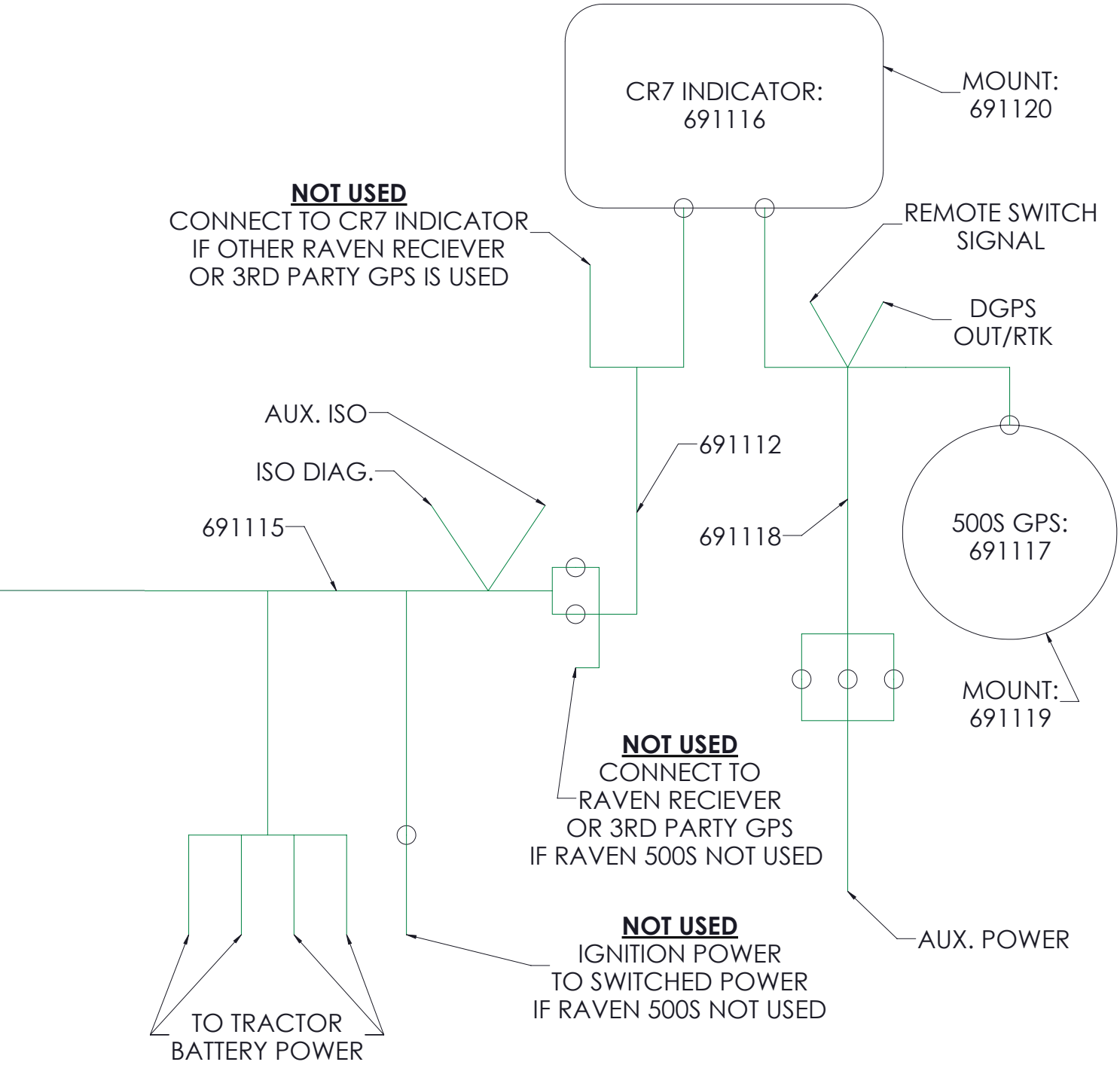


CR7 INDIC. & 500S GPS KIT: 691111 INCLUDES:
CR7 INDICATOR: 691116
500S GPS: 691117
INDIC. TO GPS CABLE: 691118
500S MOUNT: 691119
CR7 RAM MOUNT: 691120

**NOTES:**

**NOTES:**

## NOTES:

**NOTES:**

## Art’s Way Manufacturing TECHNICAL MANUALS

Manuals are available from your local dealer or Art’s Way Manufacturing for the operation, service, and repair of your machine. For prompt convenient service, contact your local dealer for assistance in obtaining the manuals for your machine.

Manuals are also available at WWW.ARTSWAY.COM free to download for your convenience.

Always give the Machine Name, Model, and Serial Number so your local dealer can provide the correct manuals for your machine.

Art’s Way Manufacturing reserves the right to make improvements in design or changes in specifications at any time without incurring any obligation to install them on units previously sold.

Except as expressly authorized, no part of this manual may be reproduced, copied, transmitted, or disseminated, in any storage medium, for any purpose without the express prior written consent of Art’s Way Manufacturing

**Art’s Way Manufacturing**

**Armstrong, Iowa, 50514, (712) 208-8467.**

**WWW.ARTSWAY.COM**