Eversman
by Art's-Way

Ditchers

Rear Mount
VH4

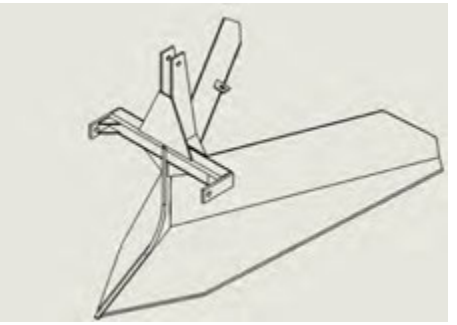

Rear Mount
VH7-ER

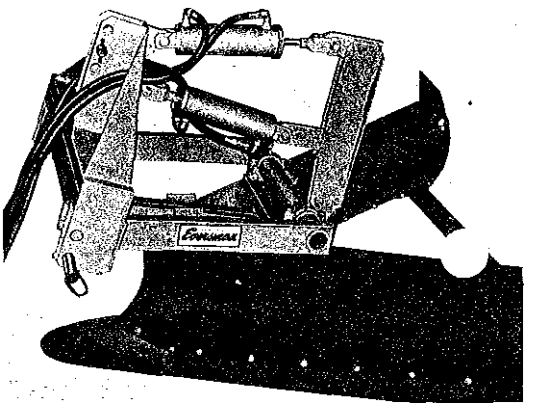

Trailed Models
VD-7

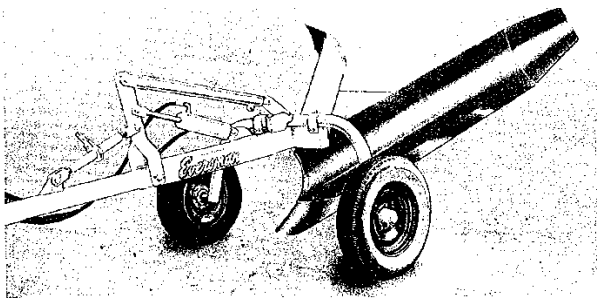

., "354920(A)
. 12/01

To The Owner

Congratulations on the purchase of your new Eversman Ditcher. You have selected a top quality machine that is designed and built with pride to give you many years of efficient, reliable service.

Many people have worked on the design, production, and delivery of this ditcher. The information in this Manual is based on the knowledge, study and experience of these people through years of manufacturing specialized farming machinery This Manual is designed to provide you with important information regarding safety; maintenance and machine operation so you can get the best possible performance from your Eversman Ditcher.

Even if you are an experienced operator of this or similar equipment; we ask you to read this Manual before using this ditcher. The way you operate, adjust and maintain this unit will have much to do with its successful performance. Any further questions you may have about this piece of Art's-Way equipment should be directed to your local Art's-Way dealer or to Art's-Way Manufacturing Co., Inc., Armstrong, Iowa 50514. (712) 864-3131.

Specifications and Design Are Subject To Change without Notice

Art's-Way Manufacturing Co., Inc. is continually making product improvements. In doing so, we reserve the right to make changes or add improvements to our products without obligation for equipment previously sold.

Because modifications to this ditcher may affect the performance, function and safety of its operation, no modifications are to be made without the written permission of Art's-Way Manufacturing Co., Inc. Any modifications made without the written permission of Art's-Way Mfg. Co. shall void the warranty of this product.

In the interest of continued safe operation of this ditcher, pay particular attention to the safety alert symbol throughout this manual

Arts-Way Manufacturing Co., Inc. Statement of Product Liability

Art's-Way Manufacturing Co., Inc. recognizes its responsibility to provide its customers with a safe and efficient product. Art's-Way attempts to design and manufacture its products in accordance with accepted engineering practices in effect at date of design. This statement should not be interpreted to mean that our products will protect against the user's own carelessness or failure to follow common safety practices as set forth in this manual, nor will Arts-Way be liable for any such act. In addition, Art's-Way assumes no liability for product altered or modified in any way by users or anyone other than an authorized dealer.

Important Warranty Information

The warranty for the Eversman Ditcher appears on page 4 of this manual In order to establish a proper warranty, the Warranty Registration and Dealer Pre-Delivery Checklist must be completed and returned to the factory Failure to comply with this requirement will result in reduced **warranty allowances.**

Limitations of This Manual

This manual contains operating instructions for your Eversman Ditcher only it does not replace the Manual(s) for any machine that it may be attached to or used with.

Parts & Service

As the new purchaser of your Eversman Ditcher, it is very important to consider the following factors:

A. Original Quality

B. Availability of Service Parts

C. Availability of Adequate Service Facilities

Art's-Way Manufacturing Co., Inc. has an excellent dealership network ready to answer any questions you may have about your Eversman Ditcher. Parts for your machine may be ordered through our dealers. When placing a parts order, please have the model and serial number ready. This will allow the dealer to fill your order as quickly as possible.

For your convenience, we have provided this space for you to record your model and serial numbers and elate of purchase, as well as your dealership name and address.

Owner's Name----------

Owner's Address ----------

_____

Purchase Date----------

Dealership Name----------

Dealership Address ----------

_____

Dealership Phone No. ----------

Enter The Serial Number & Model Number Of *Your* Ditcher In The Space Provided Above

Table of **Contents**

Warranty Registration and Delivery Service for Art's-Way Equipment .....Front

To The Owner 1

Parts & Service 2

Table of Contents 3

Limited Warranty 4

Safety First 5

Safety Guidelines .....6 & 7

Introduction: Ditchers 8

Field Operation & Adjustment: Ditchers 9- 11

C-l Tripod Assembly — V900014 12

C-3S & C-3ER Tripod Assemblies 13

Category 2 & Category 3 Pin Assemblies 14

Carrier Assembly-Vl500ll .....15 - 16

Carrier Assembly-V900605 &V900607 .....17 - 18

Optional Equipment .....19 - 22

Extended Range Tripod .....23 - 24

LIMITED WARRANTY FOR NEW ART'S WAY MANUFACTURING CO. FARM MACHINERY (U.S. ONLY)

A. **GENERAL PROVISIONS:** Art's Way Manufacturing Co., Inc. (Art's Way Mfg.) warrants the products it sells to be free from defects in material and workmanship for the periods of time set forth in the Warranty Table below. Art's Way Mfg. obligation and liability under this limited warranty, is to repair or replace (at Art's Way Mfg. option) any part(s) that upon manufacture were defective in material or workmanship. Warranty service shall be performed by an authorized Art's Way Mfg. dealer or authorized service center and will be completed using Art's Way Mfg. supplied parts. Parts supplied by Art's Way Mfg. are shipped F.O.B. Art's Way. The original purchaser shall be responsible for service calls and transportation of the farm machinery to and from their dealer or service center. The original purchaser is also responsible for any expedited repair charges (i.e., overtime and "next day air" deliveries) requested by the original purchaser. The original purchaser is also responsible for any repair service, parts, and labor on repairs made to the farm machinery at the time the warranty service was being performed.

B. **SECURING WARRANTY SERVICE:** The original purchaser must (1) contact their authorized dealer and report the break-down. (2) The authorized dealer shall provide objective evidence of the farm machinery's warranty status to Art's Way Mfg. (3) The authorized dealer shall provide all documentation to Art's Way Mfg. which supports that the farm machinery was thoroughly inspected prior to set-up and delivery to the original purchaser. (4) The original purchaser shall make the farm machinery available to their Art's Way Mfg. authorized dealer and/or Art's Way Mfg. authorized service center within 30 days of the reported break-down. All parts or assemblies replaced under the limited warranty must be held for inspection for ninety (90) days, or until credit has been issued, or a claim has been returned to a dealer. When a claim is returned to a dealer with instructions to return and/or hold the part(s) for inspection, parts must be handled as instructed or the claim may be denied.

C. **SPARE PARTS WARRANTY:** Art's Way Mfg. warrants that it will replace or repair (excluding labor) as Art's Way Mfg. elects, without charge, any genuine spare part purchased from Art's Way Mfg. which is defective in material or workmanship within ninety (90) days of the date of installation. This warranty applies to parts that, in Art's Way Mfg. judgement, prove to be defective in either material or workmanship. All parts to be shipped F.O.B. Art's Way Mfg. All spare parts replaced under the spare parts warranty must be held for inspection for ninety (90) days or until credit has been issued, or a claim has been returned to a dealer. When a claim is returned to a dealer with instructions to return and/or hold the part(s) for inspection, parts must be handled as instructed or the claim may be denied.

D. **LIMITATIONS:** Art's Way Mfg. Limited Warranty does not extend coverage to product being used in a commercial application (i.e. rented equipment). Art's Way Mfg. Limited Warranty does not extend to parts and elements not manufactured by Art's Way Mfg., and which carry the warranty of another manufacturer. Art's Way Mfg. makes no other warranty expressed or implied and makes no warranty of merchantability or fitness for any particular purpose beyond that expressly stated in this warranty. Art's Way Mfg. liability is limited to the terms set forth in this warranty and does not include any liability for direct, indirect, incidental or consequential damages or expenses of delay and Art's Way Mfg. liability is limited to the repair and replacement of defective parts as set forth herein. Any improper use and/or maintenance, including operation after the discovery of defective or worn parts, operation beyond the rated capacity, substitution of parts not approved by Art's Way Mfg. or any alteration or repair by others than the authorized Art's Way Mfg. dealer or authorized service center which affect the product materially and adversely, shall void the warranty. No dealer, employee or representative is authorized to change this warranty in any way or grant any other warranty unless such change is made in writing and signed by an officer of Art's Way Mfg. Some states do not allow limitations on how long an implied warranty lasts or exclusions or limitations of incidental or consequential damages, so the above limitations or exclusions may not apply to you. This warranty gives you the specific legal rights, and you may have other rights that vary from state to state.

NOTE: As of April 1, 2015, all previously distributed information concerning the limited warranty coverage of any Art's Way Manufacturing Company, Inc. manufactured product is to be considered null and void and replaced by this document.

Art's Way Mfg. Farm Machinery	Warranty Coverage
Grinder / Mixer – Model 6520, 6530, 6140, 6105, and Portable and Stationary equipment	1 (one) Year from Date of Delivery to Original Purchaser
Manure Spreader	1 (one) Year from Date of Delivery to Original Purchaser
Graders and Land Planes	1 (one) Year from Date of Delivery to Original Purchaser
Beet Harvesting Machinery	1 (one) Harvest Season from Date of Delivery to Original Purchaser
Shredders – Model 180C and 240C	1 (one) Year from Date of Delivery to Original Purchaser
Plows	1 (one) Year from Date of Delivery to Original Purchaser
Forage Blowers – Model 1060 and 2060	1 (one) Year from Date of Delivery to Original Purchaser
Forage Boxes/Receivers – Model 5300 and 1250	1 (one) Year from Date of Delivery to Original Purchaser
Rakes	1 (one) Year from Date of Delivery to Original Purchaser
Dump Boxes	1 (one) Year from Date of Delivery to Original Purchaser
Augers	1 (one) Year from Date of Delivery to Original Purchaser
Running Gear	1 (one) Year from Date of Delivery to Original Purchaser
Snow Blowers	1 (one) Year from Date of Delivery to Original Purchaser

Effective 1 April 2015

Safety First

> ***"A careful operator is the best insurance against an accident."***
> ***National Safety* Council**

Most accidents can be prevented if the operator:

- fully understands how the machine functions
- can anticipate situations which may produce problems
- can make necessary corrections before problems develop

Figure *1. The Universal Safely Alert Symbol*

The American Society of Agricultural Engineers has adopted the *UNIVERSAL SAFETY ALERT SYMBOL* (Figure 1) as a way to identify areas of potential danger if the equipment is not operated correctly.
Please be alert whenever you see this symbol .in the manual or on your ditcher.

Arts-Way Manufacturing Co., Inc. strives to make our equipment as safe as it can possibly be. The Eversman Ditcher conforms to all applicable safety standards at the time of manufacturing. A safety conscious equipment operator makes an effective accident-prevention program complete.

Safety features and instructions for the Art's-Way Eversman Ditcher are detailed elsewhere in the Operators Manual It is the responsibility of the ditcher owner to ensure that all operators read and understand the Manual before they are allowed to operate the ditcher. *[Occupational Safety and Health Administration (OSHA) regulation 1928.57].*

Notices of Danger, Warning, and Caution

Watch for these words on ditcher decals and in this Manual to alert you to important safety messages.

DANGER	WARNING	CAUTION
Immediate and specific hazard which **will** result in severe personal injury or death if proper precautions are not taken.	Specific hazard or unsafe practice **could** result in severe personal injury or death if proper precautions are not taken.	A reminder of good safety practices. Personal injury **could** result if proper procedures are not followed

Safety Guidelines

CAUTION

Remember, a careful operator is the best insurance against an accident.

CAUTION

READ and UNDERSTAND the Operator's Manual and all the safety decals before operating the ditcher. Review safety instructions with all operators annually.

Before Operating

- Do not wear loose fitting clothing as it may catch in moving parts.
- Make sure to install and/or secure all guards and shields, including the tractor power take-off master shield, before starting or operating the Ditcher.
- Clear the area of bystanders, especially children, when making repairs, adjustments or performing maintenance on the ditcher.
- Do not allow riders while transporting.
- Put all tractor and machine controls in "neutral" and disengage the PTO before starting. Follow the starting instructions according to your tractor Manual.
- Operate the ditcher only while seated on the tractor seat.
- Make sure the unit is adequately supported with safety blocks or safety stands when changing tires or working on it.

During Operation

- Keep hands, feet, hair and clothing away from moving parts.
- Keep all shields and guards in place and in good repair.
- Keep all children and bystanders away from the ditcher while in operation.
- Do not allow riders while the ditcher is in operation.
- Before servicing, adjusting, repairing or unplugging the ditcher, stop the tractor engine, place all the controls in neutral, set the parking brake, ren10ve the ignition key:
- Stay away from overhead power lines. Electrocution can occur even ·without direct contact.
- Keep all hydraulic lines, fittings, and couplers tight and free of leaks. (See the Hydraulic Safety section, below).

Maintenance Safety

- Follow all operating, maintenance and safety instructions found in this Manual.
- Before servicing, adjusting, repairing or unplugging the mixer, stop the tractor engine, place all the controls in neutral, set the parking brake, remove the ignition key and wait for all moving parts to stop.
- Use only the tools, jacks and hoists that are of sufficient capacity for the job.
- Use support blocks or safety stands when changing tires or working under the machine.
- Follow the good shop practices of keeping the service area clean and dry and use adequate light for the job at hand.

Hydraulic Safety

- Before applying pressure from the hydraulic system, make sure all lines, fittings and couplers are tight and in good condition.
- Relieve pressure from the hydraulic circuit before servicing or disconnecting from the tractor.
- Make sure all shields/guards are in place and properly secured when maintenance work is complete.
- Replace any worm, cut, abraded, flattened or crimped hoses.
- Do Not make any temporary repairs to the hydraulic lines, fittings or hoses by using tape, clamps or cement. The hydraulic system operates under extremely high pressure and temporary repairs may fail suddenly and create a hazardous situation.
- Wear proper hand and eye protection when searching for a high-pressure hydraulic leak. Use a piece of wood or cardboard as a backstop instead of hands to identify and isolate a leak. If injured by a concentrated High-pressure stream of hydraulic fluid, seek medical attention immediately. Serious

infection or toxic reaction can develop if hydraulic fluid penetrates the surface of the skin.

- Before applying pressure to the system, make sure all components are tight and that the lines, hoses and couplings are not damaged.

Transportation Safety

- Be sure to comply with all local regulations regarding transporting equipment on public roads and highways.
- Make sure the Slow Moving Vehicle (SMV) emblem and all lights and reflectors required by local highway and transportation authorities in place, clean and clearly visible to all oncoming traffic.
- Do Not allow riders while transporting.
- Make sure the ditcher is securely attached to the tractor.
- Do Not fail to latch the tractor brake pedals **together.**
- Do Not exceed 10 mph (l6km/h) when transporting a D7 pull behind ditcher. Always reduce speed on rough roads and **surfaces, or when going down inclines.**
- Drive slowly when turning and always use turn signals on the tractor to indicate your turning intentions to the other traffic.
- The weight of the trailed machine should NEVER exceed the weight of the towing vehicle.
- Check clearances carefully wherever the machine is towed.

Storage Safety

- Store the ditcher in an area away from human **activity.**
- Do Not permit children to play on or around the stored machine.

Tire Safety

- Have a qualified tire dealer or repair service perform tire repairs.
- **Do Not attempt to mount a tire unless you** have the proper equipment and experience to do the job.
- Follow proper procedures when mounting a tire on a rim to prevent an explosion which could result in serious injury
- Do Not use tires that are gouged, bulging, or are badly worn.

CAUTION

Failure to follow proper procedures when mounting a tire on a wheel or rim can produce an explosion which may result in serious injury or death. Do not attempt to mount a tire unless you have the proper equipment and experience to perform the job. Have it done by your dealer or a qualified tire repair service.

Assembly Safety

- Use adequate manpower to perform assembly procedures safely
- Do Not allow spectators in the working area.

Remember:
"The Best Operator is a Safe Operator"

Introduction: Eversman Ditchers

This manual has been prepared to acquaint you with the proper operation, adjustment, lubrication and service of the Eversman Ditcher. Take the time to be careful and better understand the efficient operation and care of your machine.

Whenever the terms "left" and "Right" are used, it should be understood to mean standing behind the machine and facing the direction of the forward travel.

The Eversman Ditcher line is comprised of three models -two rear-tractor mounted and one rubber-tire mounted. The details of these models are as follows:

A - Model H4

This ditcher consists of a light-weight, inexpensive tripod and a four foot wing assembly. It is for installation of Category 1, small horse power tractors, which are to be operated in first gear with the hydraulic system set on constant draft control. It was primarily designed to construct small grain field laterals. The H4 should be used with 4-wheel tractors since insufficient vertical adjustment is available to clear the bottom of a ditch if a tricycle tractor is utilized.

B- Model H7-ER*

This ditcher consists of a heavier tripod- the C-3ER, and a seven foot wing assembly. The C-3ER is designated as "extended range" since it permits a much greater adjustment of ditch depth and width, and transport clearance. This tripod is installed on Category 2 or 3 hitches, and is operated with two 8" stroke cylinders, or one cylinder for the depth control, and a heavy-duty adjusting screw for the width, or angle adjustment (V932060).

C- Model D-7*

This is a pull-behind ditcher, mounted on rubber tires, and consists of a seven foot wing and the carrier assembly. It operates with either 2 - 8" stroke cylinders, or a mechanical ratchet jack can be substituted for the front cylinder which regulates the shape, or width, of the ditch.

***Not recommended for use with tractors larger Than 100 HP.**

Field Operation & Adjustment

For both tractor-mounted and rubber-tire-mounted ditchers, the hitch must be free to float, so any sway blocks or chains should be removed.

Varying soil conditions, tractor sizes and individual grower specifications for contacting, or cleaning ditches make it almost impossible to establish any standard procedure for adjusting and operating Eversman ditchers. All models have sufficient adjustments and controls available to regulate the depth and shape (width) of channel desired. This then merely becomes a matter of the operator experimenting with the controls until he obtains the ditch he wants.

In general, the operator should first establish the shape of the ditch *by* using the control to pitch the wing to the desired angle. Then he can develop the depth of the ditch as soil conditions and the power available permit. Several passes are normally required, which will result in a firm, well-packed ditch bank, less subject to washing away.

A duckbill nose share (V906200) is shipped as standard on all ditcher models since this will penetrate most soils and produce a flat-bottom ditch. For extremely difficult soils, a narrow; or pointed, nose share (V902800) is no longer available.

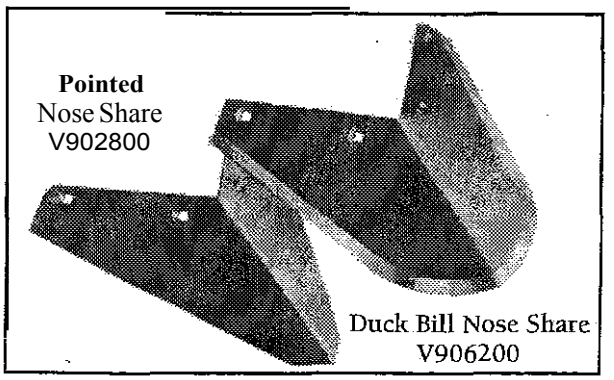

Figure 4. Nose Shares

Three sets of holes at the top and bottom of the D-1 tripod, combined with the adjustment available with the screw control, will permit a

The H4 should be used only with Cat. 1, 4-wheel tractors, operated in first gear, and with the hydraulic system set on constant draft control.

The H-7ER models can be operated with any standard, ASAE, 8" stoke cylinder. If a mechanical control is used, the heavy-duty screw control, V932060, is recommended since the strength of the ratchet jack is marginal. Three holes are available at the top of the C-3S hitch to connect the regular tractor top link at whatever angle is desired, and a choice of two holes for the lower draft arms connection permits further depth adjustment, (Figure B, page 14). Step pins at the top and bottom are designed to accommodate either Cat. 2 or 3 hitches.

Model H7-ER are designed for installation on either Cat. 2 or 3 hitches, and are shipped without controls. The tripod is designated as "Extended Range" since it permits a much greater adjustment of channel shape and transport clearance than the C-3S. Note photos on pages 24 and 25 which show the range of adjustments.

The fast, easy method to operate the ER model is with two 8" stroke hydraulic cylinders and two tractor control valves. If only one tractor control valve is available, the top cylinder can be replaced with the heavy-duty screw (V932060). This cylinder, or screw, regulates the shape, or angle, of the ditch. It is not practical to utilize a mechanical control for the bottom cylinder, which controls the channel depth, since this requires frequent changes during field operations.

IMPORTANT- The Eversman cylinders (Kit No. V932085) must be installed exactly as shown in the bottom photo on page 19. Not that the elbow on the top end of the lower cylinder is installed at 90" to permit sufficient clearance with the top cylinder barrel. If connected at any other angle, these elbows will be knocked off. If other makes of cylinders are used on the ER tripod, a careful check of interference should be made by operating slowly through the full strokes of both cylinders.

Page 10 shows a range of channel sizes and shapes possible to construct with the "ER" ditchers

Field Operation & Adjustment, Cont.

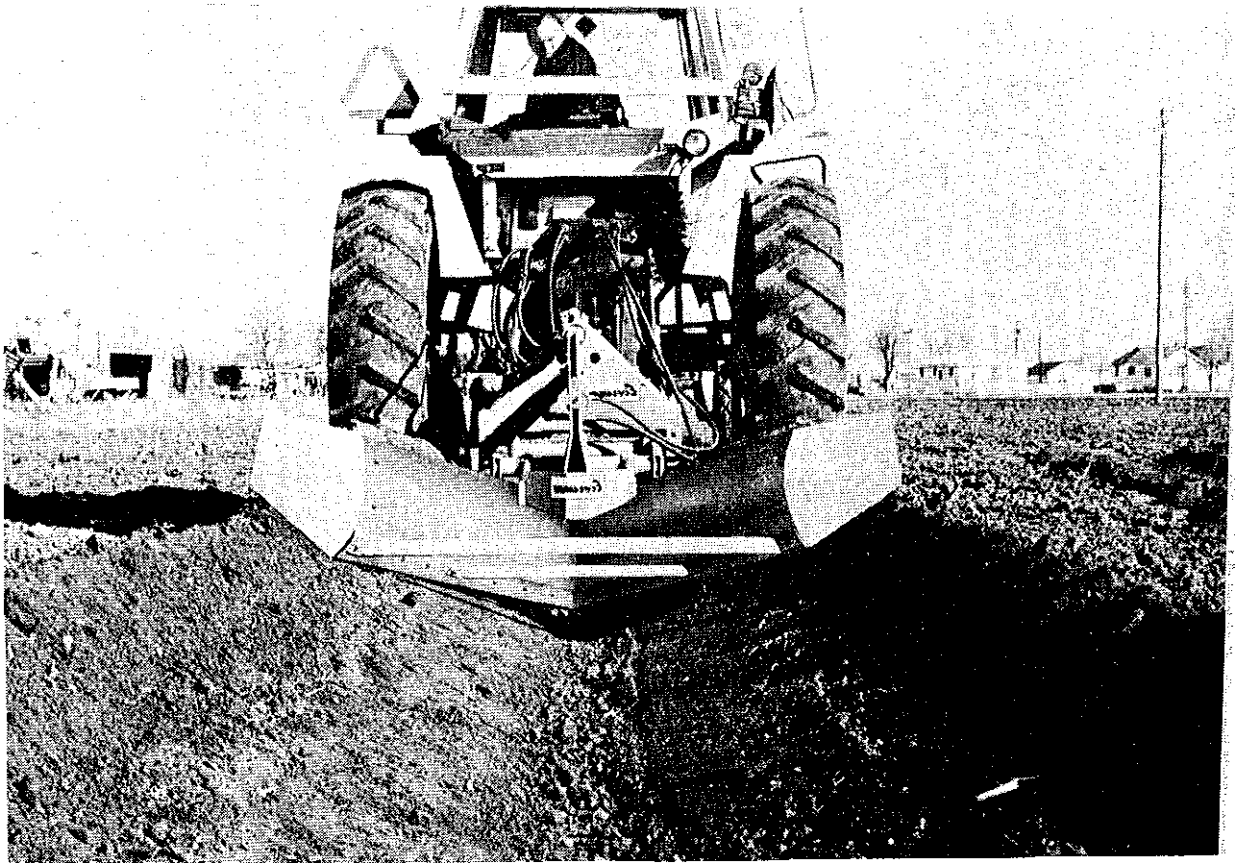

Figure 2.

***Figure** 3.*

Field Operation & Adjustment, Cont.

The Model D-7 are shipped without controls and with 15" rims (without tires or valve stems). Used automotive 15" tires that are in good condition may be installed. These ditchers can be operated with two standard, 8" stroke, ASAE, cylinders. Two tractor control valves are required.

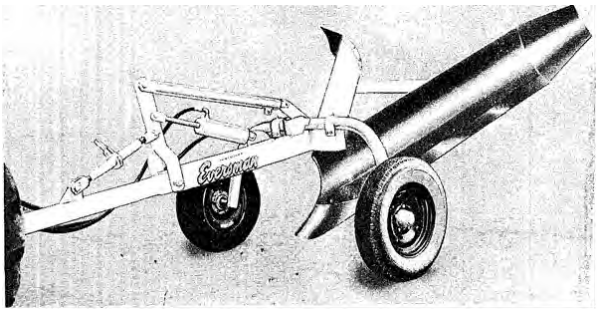

Figure **5.**

It is recommended that a cylinder always be used for the rear control since this regulates the depth of the ditch which is a frequent adjustment **when either constructing new ditches or clean**ing old ones. Normally, the front control is set **and not changed as often. This control regulates** the shape, and width of the channel by changing the angle of the wing, and the adjustment can be done mechanically with a ratchet jack (Vl72600), or the heavy-duty adjusting screw (V932060). In this case only one tractor control valve is required.

By means of an overhead lift pipe, and a two-section main beam structure, the D-7 chassis always remains substantially parallel to the ground, and when pulled out of a ditch, the nose share will not disturb the ditch bank.

To assemble the D-7, first attach the axle to the rear of the main beam with the two axle clips, and the tongue and lever arm to the front with the clevis pin. Then, after installing the lift pipel, the front and rear controls can be attached, the tires mounted, and the chassis assembly lifted to permit mounting the wing assembly.

The optional wing extensions (Kit No. V15ll60) can be added to either the wing. These extensions will widen the channel *by* pushing soil over the bank when set as shown (in Figure 6), or when reversed, (as in Figure 7), will spread the soil out to increase the channel's effectiveness as a drainage ditch.

NOTE: All of the old Eversman ditcher wings which were shipped with the V903000 wing shoe casting can be installed on any of the **current tripods, or on the Carrier Assembly.** However, if the owner needs to install a new 7' wing assembly on an old tripod, or the older style D-5 or D-6 carrier, then a V90l8l0 adapter kit must be ordered. (See drawing on page 21).

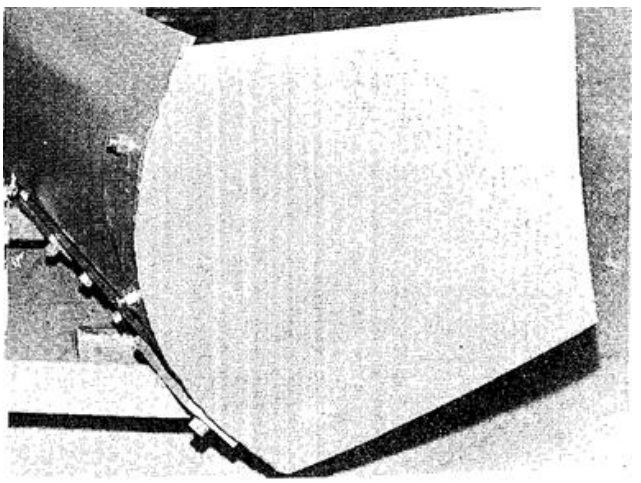

Figure 6. Wing ***extension tilted*** **up** ***to widen bank for irrigation ditch. RH wing (Vl51020)*** **on** ***right side of ditcher.***

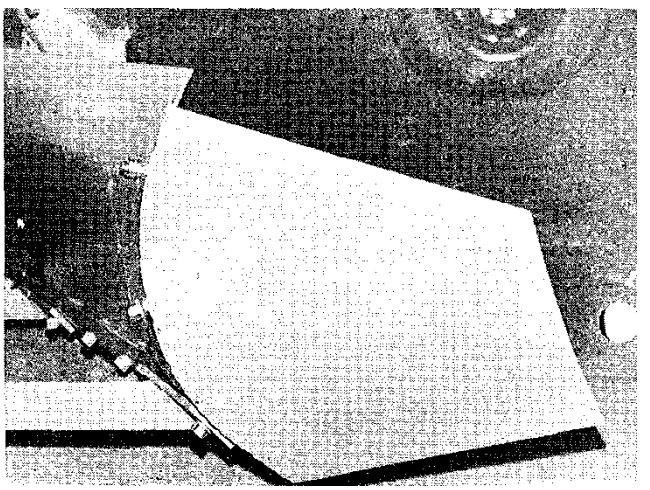

Figure 7. ***Wing extension flattened to erase bank for*** *Drainage ditch.* LH wing *(Vl51010) on right side of ditcher.*

NOTES:

VH4 WELDMENT – V938120

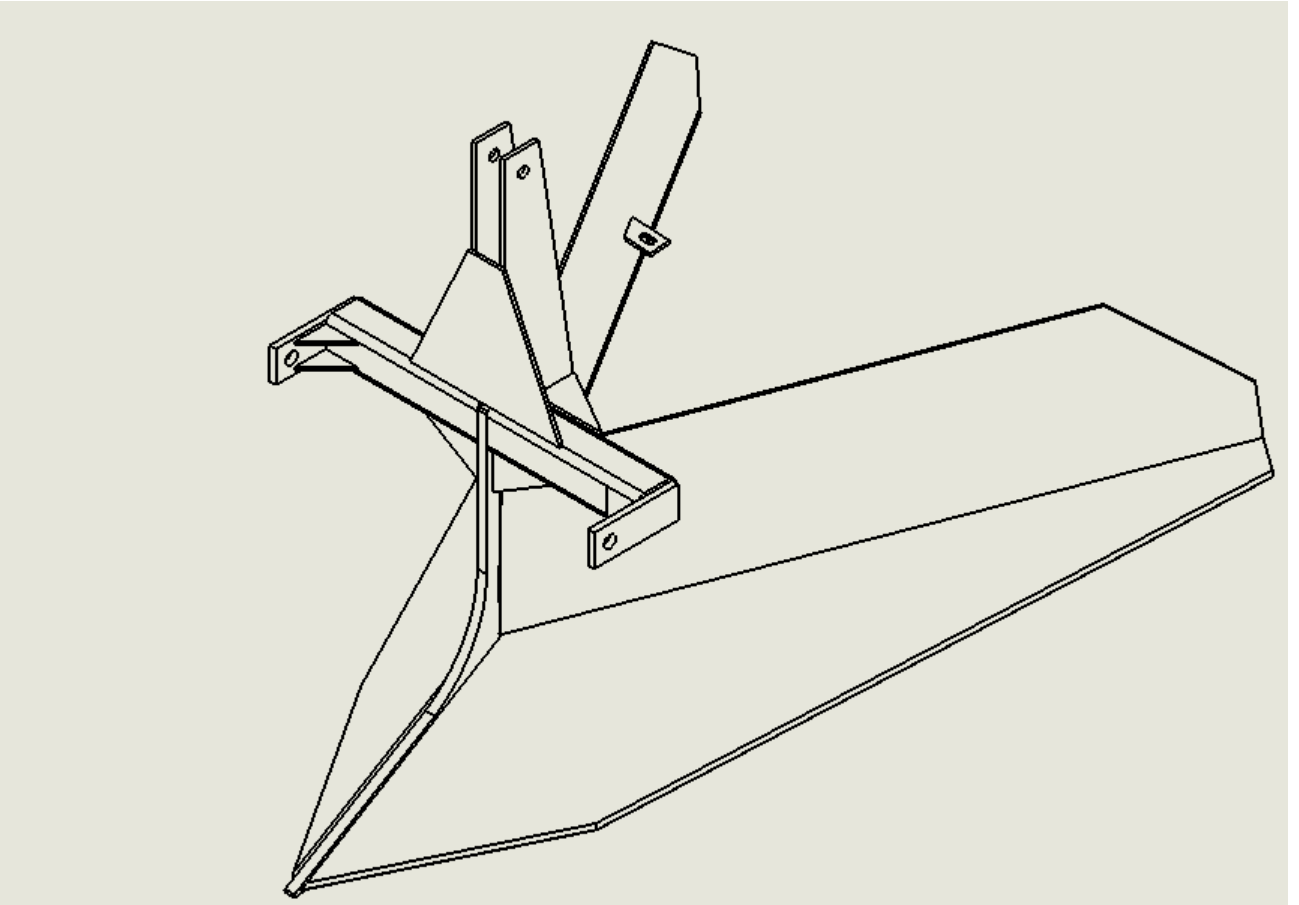

VH4 PARTS BOX - V938054			
ITEM	PART NUMBER	DESCRIPTION	QTY
1	003460	WASHER, LOCK 7/8 SAE MED	2
2	005360	NUT, HEX 1/2-13	2
3	005370	WASHER LOCK 1/2	2
4	023990	WASHER LOCK 7/16	1
5	030470	BOLT CRG 1/2-13 X 1-1/4	2
6	167330	SOCKET, SMV EMBLEM MOUNT	1
7	227880	FORM, WARNTY REGISTRAT	1
8	I12510005	NUT, 7/16 #5 ZND	1
9	R61471	NUT, HEX 7/8-14 GR5 ZN	2
10	V051112	BOLT, CRG 7/16-14 X 1 GR	1
11	V240437	PIN, LYNCH 7/16 X 11/32	2
12	V615736	CARTON, 6 X 6 X 2	1
13	V921000	PIN, DRAW: CAT 1 W/O NUT	2
14	V938117	BRACE, ANGLE WING	1

C-3ER Tripod Assemblies

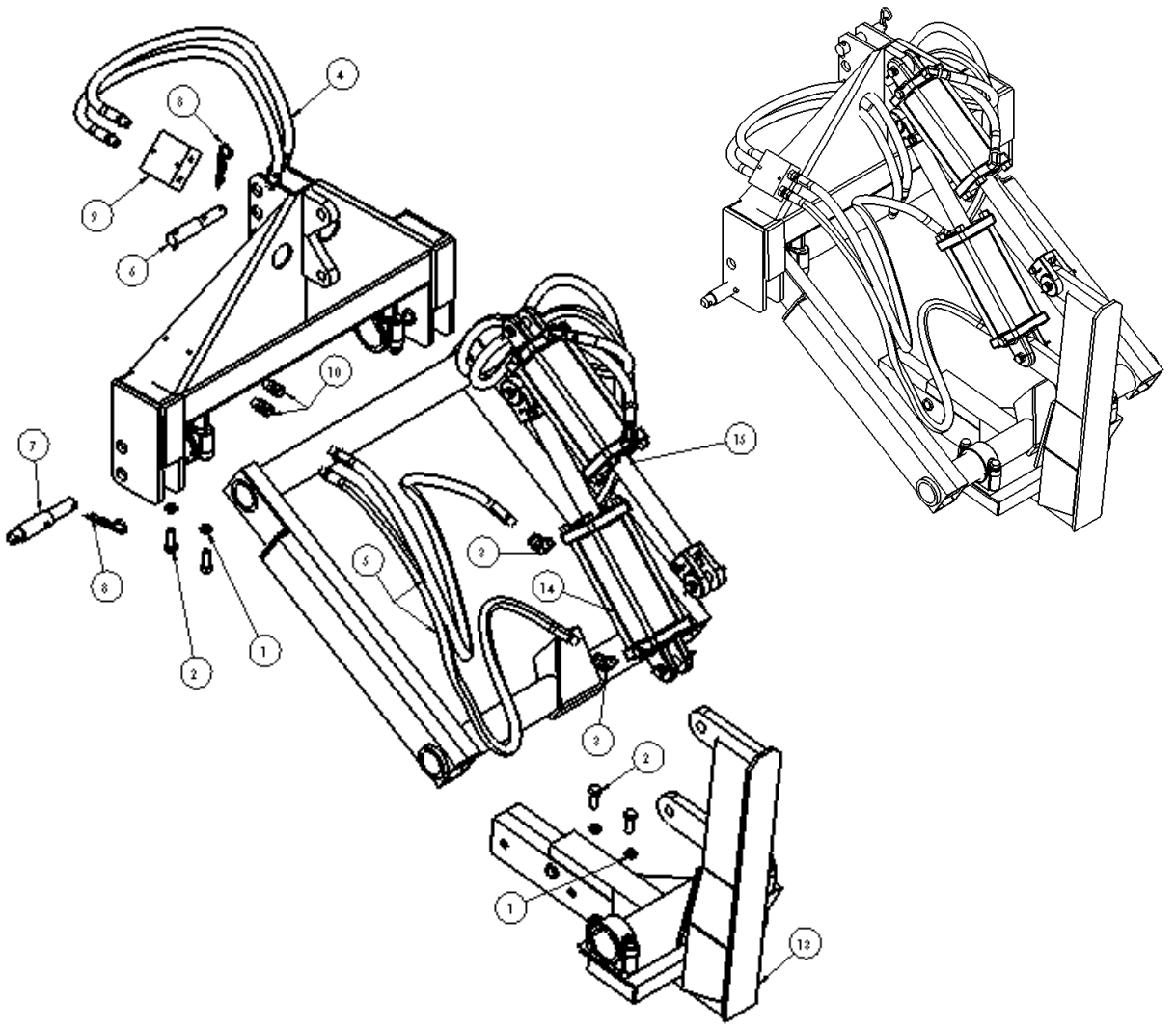

ITEM NO.	PART NUMBER	DESCRIPTION	QTY.
1	020440	WASHER, LOCK 5/8	8
2	025100	HBOLT 0.6250-11x1.75x1.75-N	8
3	166230	FITTING, HYD 90º STREET	2
4	V022270	HOSE, HYD 1/2 x 34"	2
5	V041007	HOSE, HYD 1/2 x 57"	2
6	V290425	UPPER HITCH PIN ASSY.	1
7	V290450	LOWER HITCH PIN ASSY	2
8	V290451	PIN, HAIR 1/4 X 5-1/4"	3
9	V609550	CUSHION VALVE	1
10	V710402	FITTIGN, HYD SWIVEL ADPT	2
11	V932001	HITCH CAT 2 & 3 WLDT	1
12	V932042	LINK WLDT TRIPOD	1
13	V932045	FRAME WLDT, EXTENDED	1
14	U50300374	CYLINDER, HYD 4" X 8"	1
15	V932085	HYD, CYLINDER KIT	1

V932085 – HYDRAULIC CYLINDER KIT EXTENDED REACH

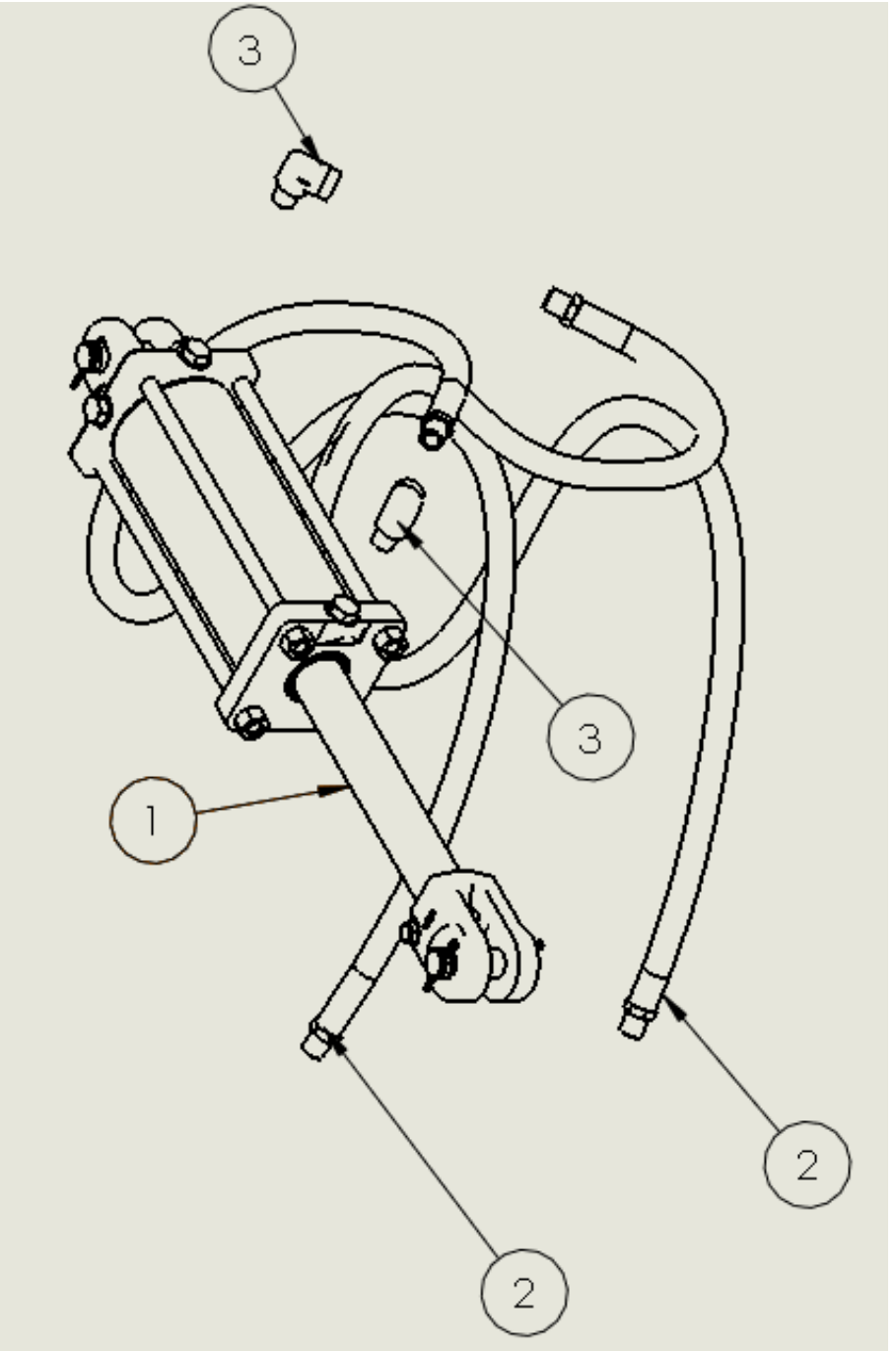

ITEM NO.	PART NUMBER	DESCRIPTION	QTY.
1	U50300374	CYLINDER, HYD 4" X 8"	1
2	166160	HOSE, HYD 1/2 X 72"	2
3	166230	FITTING, HYD 90° STREET	2

V932060 – ADJUSTMENT SCREW EXTENDED REACH

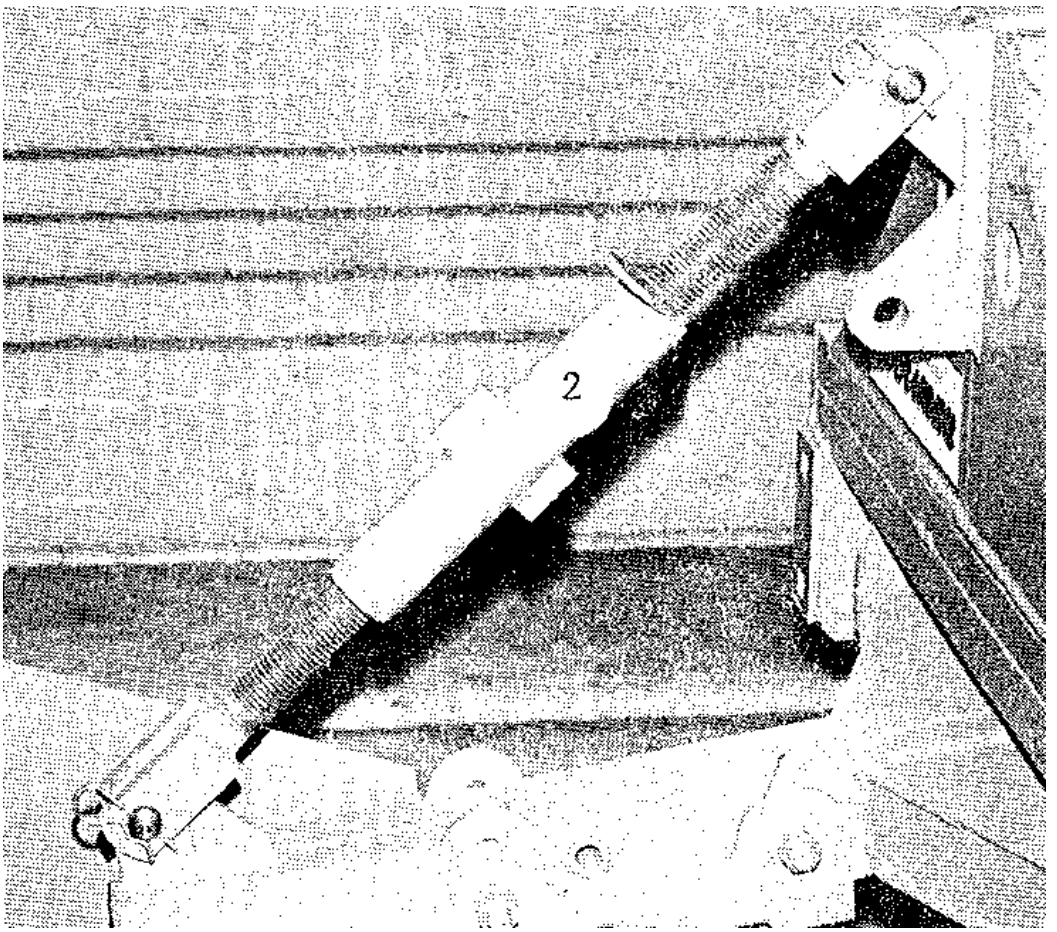

NOTE: ALL VH7ER MODELS MUST HAVE EITHER V932085 OR V932060

Category 2 & 3 Quick Hitch Option

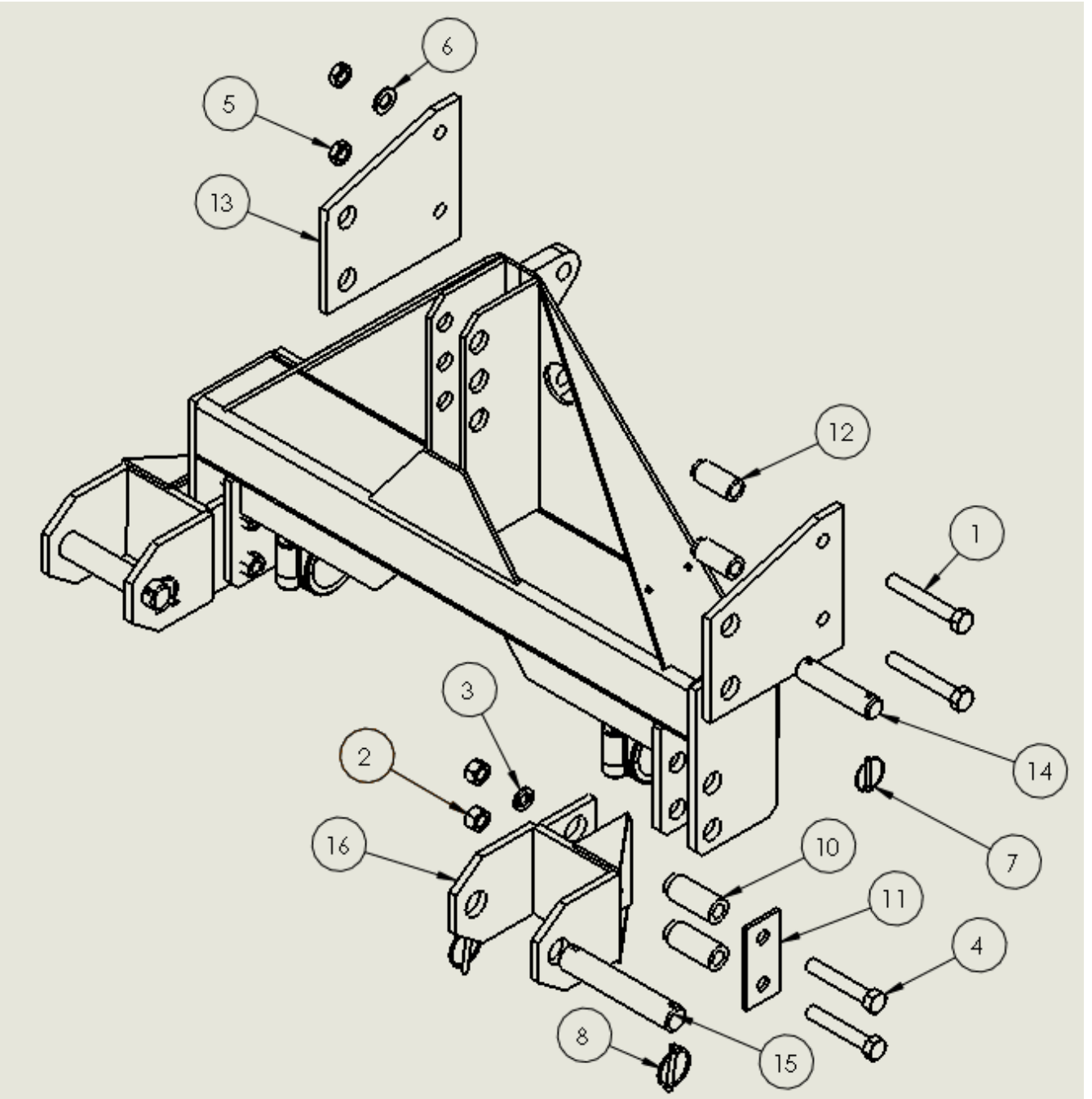

Category 2 & 3 Quick Hitch Option

ITEM NO.	PART NUMBER	DESCRIPTION	QTY.
1	023550	BOLT, HHCS 3/4-10 X 5"	2
2	036750	NUT, HEX 3/4-10	4
3	036800	WASHER, LOCK 3/4 SAE	4
4	991050	HBOLT 0.7500-10x8.5x8.5-N	4
5	E552038	NUT, JAM 3/4-10 HEX	2
6	I131017	WASHER, FLAT	2
7	R66461	1/4" LYNCH PIN	2
8	V043065	PIN, SNAP RING	4
10	V932101	LOWER SLEEVE CAT. 2 & 3 DITCHER	4
11	V932102	PLATE, CAT 2& 3 DITCHER	2
12	V932104	UPPER SLEEVE CAT. 2 & 3 DITCHER	2
13	V932105	UPPER PLATE CAT. 2 & 3 DITCHER	2
14	V932106	UPPER PIN CAT. 2 & 3 DITCHER	1
15	V932107	LOWER PIN CAT 2 & 3 DITCHER	2
16	V932110	CAT. 2 & 3 WLDMNT	2

Carrier Assembly - Vl50011

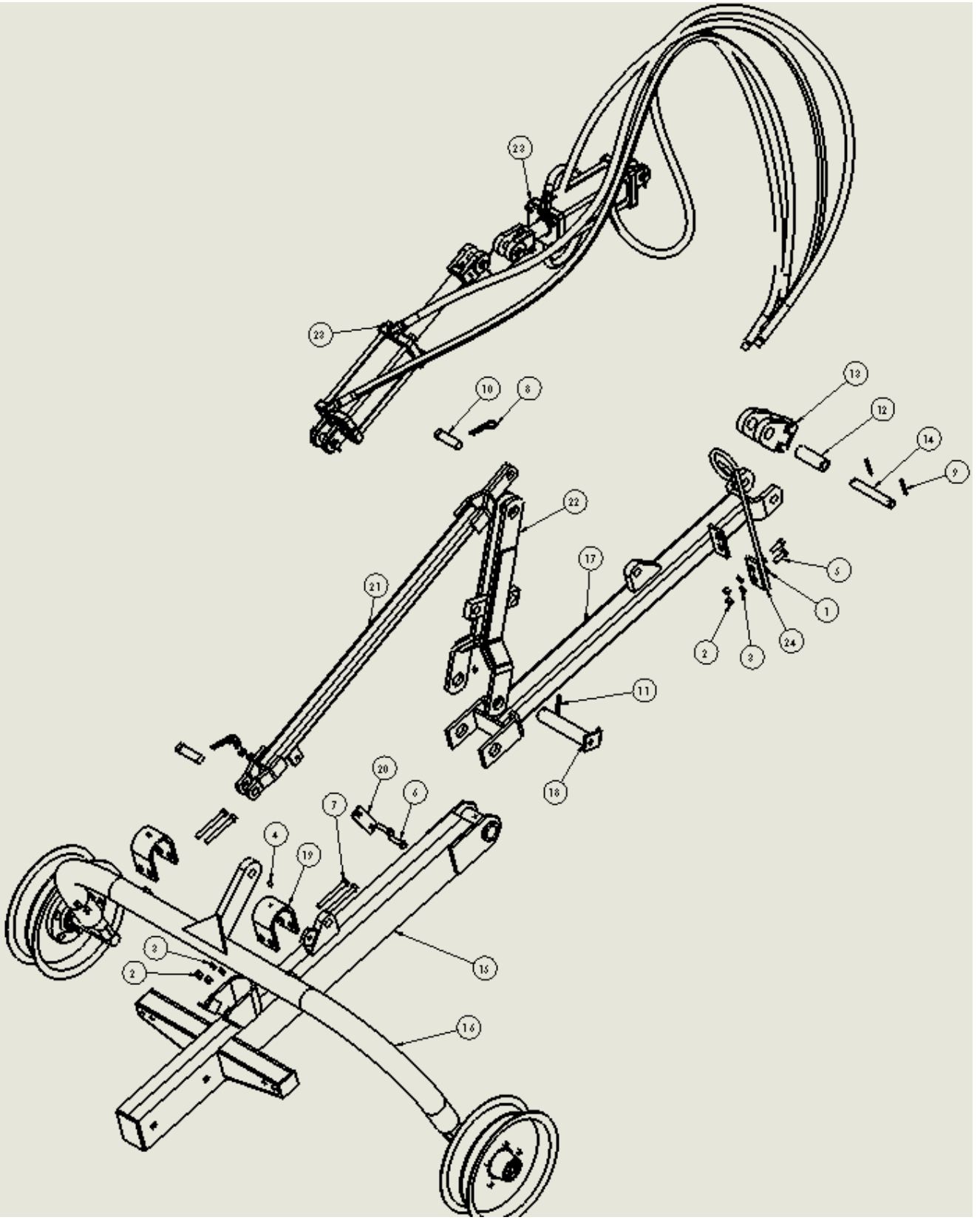

Carrier Assembly- V150011

ITEM NO.	PART NUMBER	DESCRIPTION	VD7/QTY.
1	005200	WASHER, FLAT 1/2 STD	2
2	005360	NUT, HEX 1/2-13	8
3	005370	WASHER, LOCK 1/2	8
4	013170	FITTING, GREASE STRAIGHT	3
5	014770	BOLT, HHCS 1/2-13 X 1-1/2"	2
6	023950	BOLT, HHCS 1/2-13 X 2"	2
7	030420	HBOLT 1/2-13 x 4-1/2" GR5 ZN	4
8	035830	Pin, Cotter 3/16 x 1-1/2 ZN	2
9	114370	PIN, COTTER, 1/4" X 2" Z5	2
10	143951648	Pin, Clevis 1 x 3 ZN	2
11	R66633	COTTER PIN 5/16 X 2-1/2	1
12	V040619	SPACER, HITCH CLEVIS	1
13	V040629	CASTING, CLEVIS	1
14	V040642	PIN, CLEVIS 1 X 6-1/4	1
15	V150020	FRAME WLDT, MAIN 7'/5'	1
16	V150300	AXLE AND HUB ASSY, 7'/5'	1
17	V150351	TONGUE WLDT, 7'/5'	1
18	V150500	PIN, WLDT, CLEVIS	1
19	V150580	CLAMP, AXLE 7'/5'	2
20	V150660	BAR, LOCK UP	2
21	V151120	WLDT, TUBE	1
22	V151140	ARM WLDT, LEVER 7'/5'	1
23	V261500	DITCHER HYD KIT D7	1 OR 2
24	V281010	SUPPORT WLDT, HYD HOSE	1

For VD-7 models using 1 Hydraulic cylinders, use V17260 or V932060 in place of V261500

7' Wing Assembly-V900607

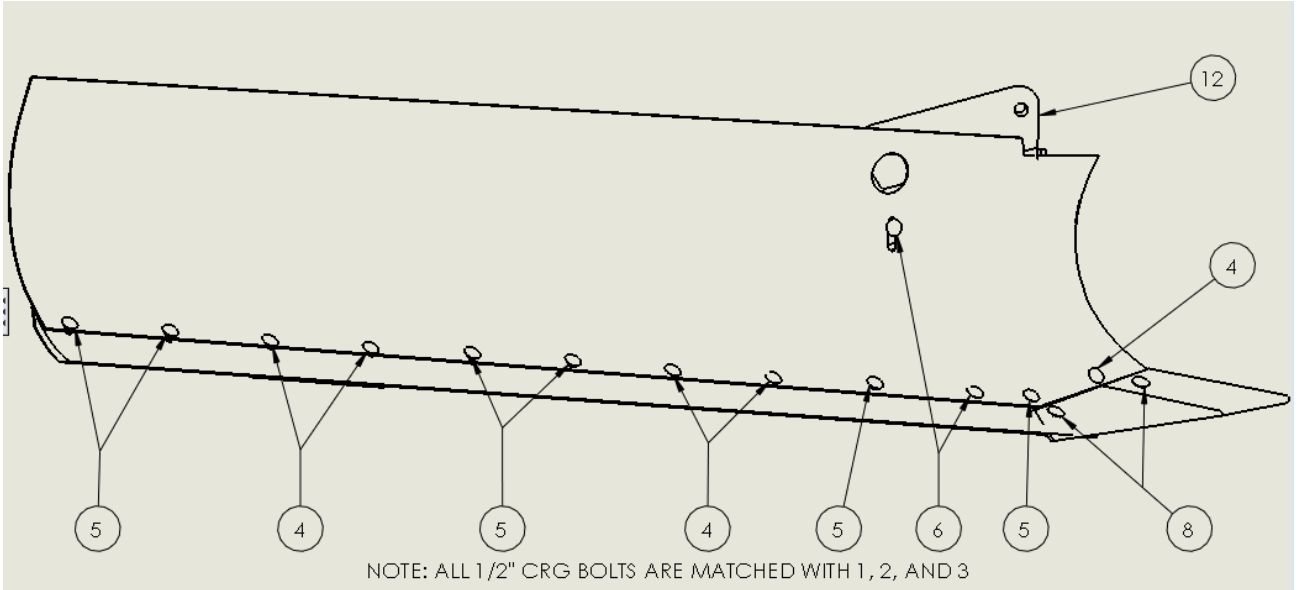

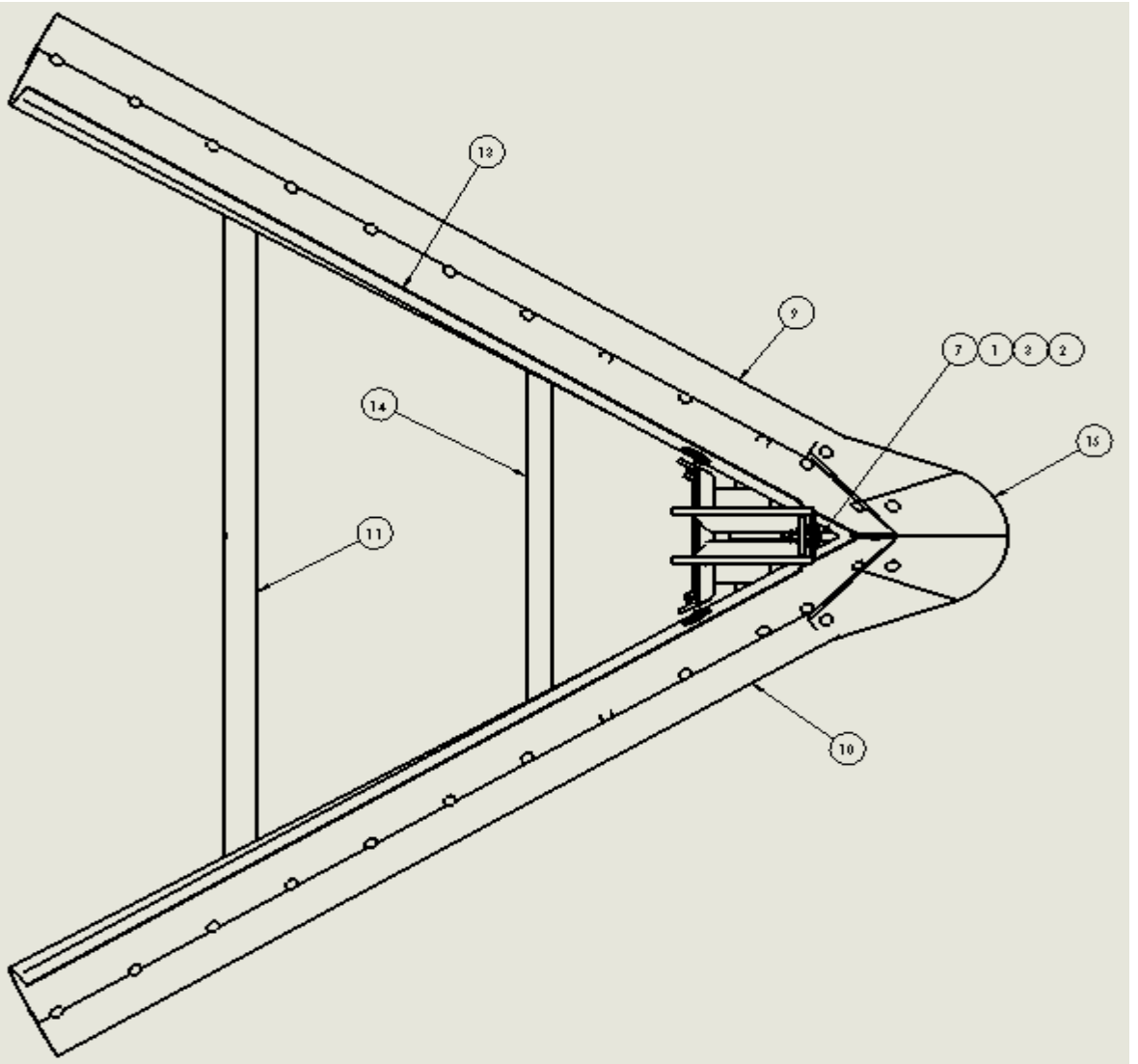

7' Wing Assembly- V900607

ITEM NO.	PART NUMBER	DESCRIPTION	Default/ QTY.
1	005200	WASHER, FLAT 1/2 STD	31
2	005360	NUT, HEX 1/2-13	31
3	005370	WASHER, LOCK 1/2	31
4	025390	BOLT, CRG 1/2-13 X 1-3/4"	10
5	030470	BOLT, CRG 1/2-13 X 1-1/4"	12
6	991200	RHSNBOLT 0.5-13x2x2-N	4
7	J03H1594	BOLT, CRG 1/2-13 X 2-3/4"	1
8	V059779	BOLT, PLOW 1/2-13 X 1-3/4	4
9	V151255	LH DITCHER BIT 74"	1
10	V151256	RH DITCHER BIT 74"	1
11	V904400	REAR WING BRACE	1
12	SEE NEXT PG.	WING SHARE AND SHOE ASSY.	1
13	V151257	7' DITCHER WING WLDT	1
14	V901600	FNT DITCHER WING BRACE	1
15	V906200	DUCK BILL NOSE SHARE	1

Note: To install, these wing assemblies on old C-2 tripods (V9000l5) or old chassis assemblies (V9000l0), order adapter kit V9018l0.

Wing Share and Shoe Assembly

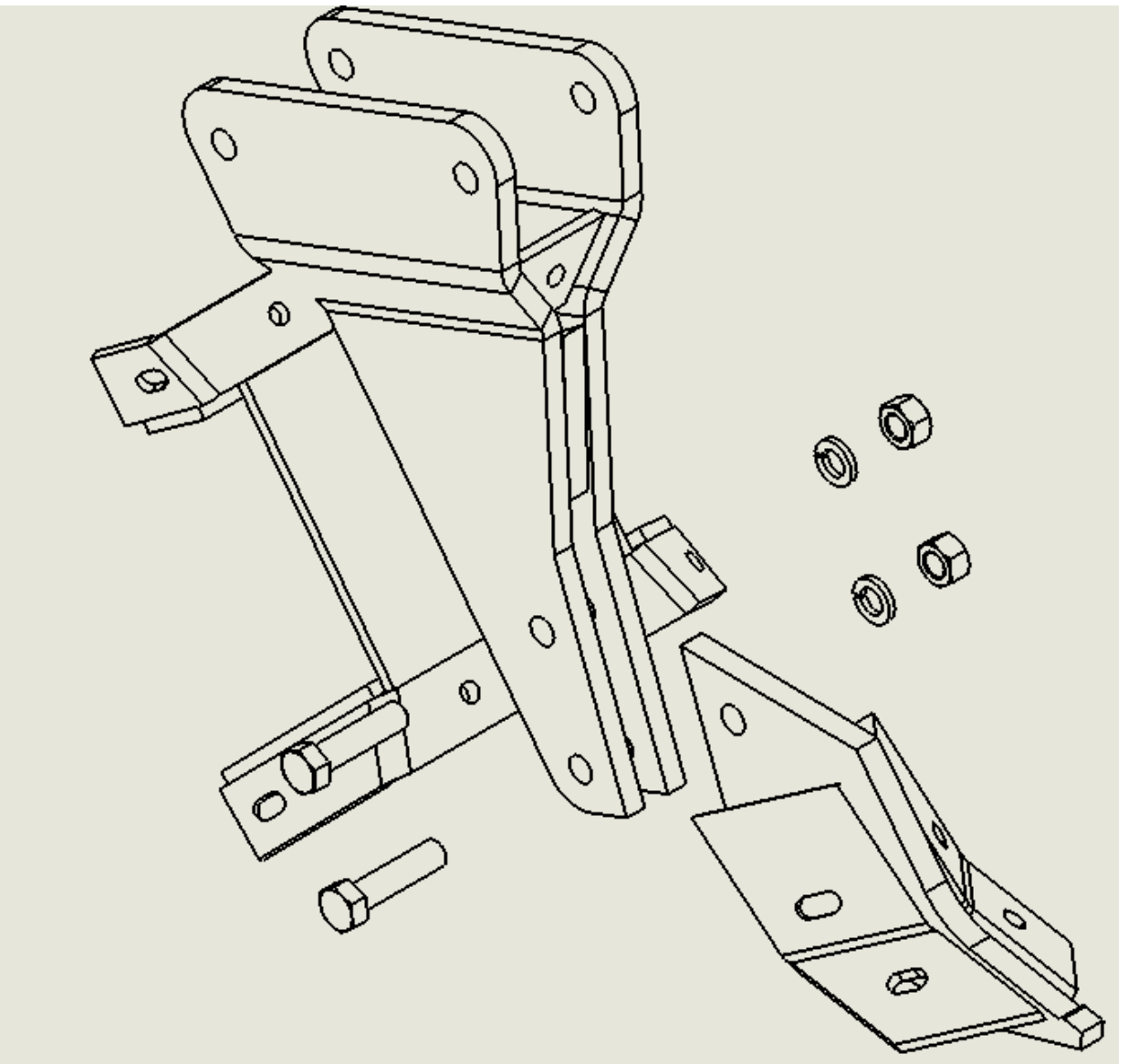

ITEM NO.	PART NUMBER	DESCRIPTION	QTY.
1	V150701	WING SHARE WLDT	1
2	V151190	DITCHER SHOE WLDT	1
3	036750	NUT, HEX 3/4-10	2
4	036800	WASHER, LOCK 3/4 SAE	2
5	990570	BOLT, HHCS 3/4-10 x 3	2

Wing Extensions Option – V151160

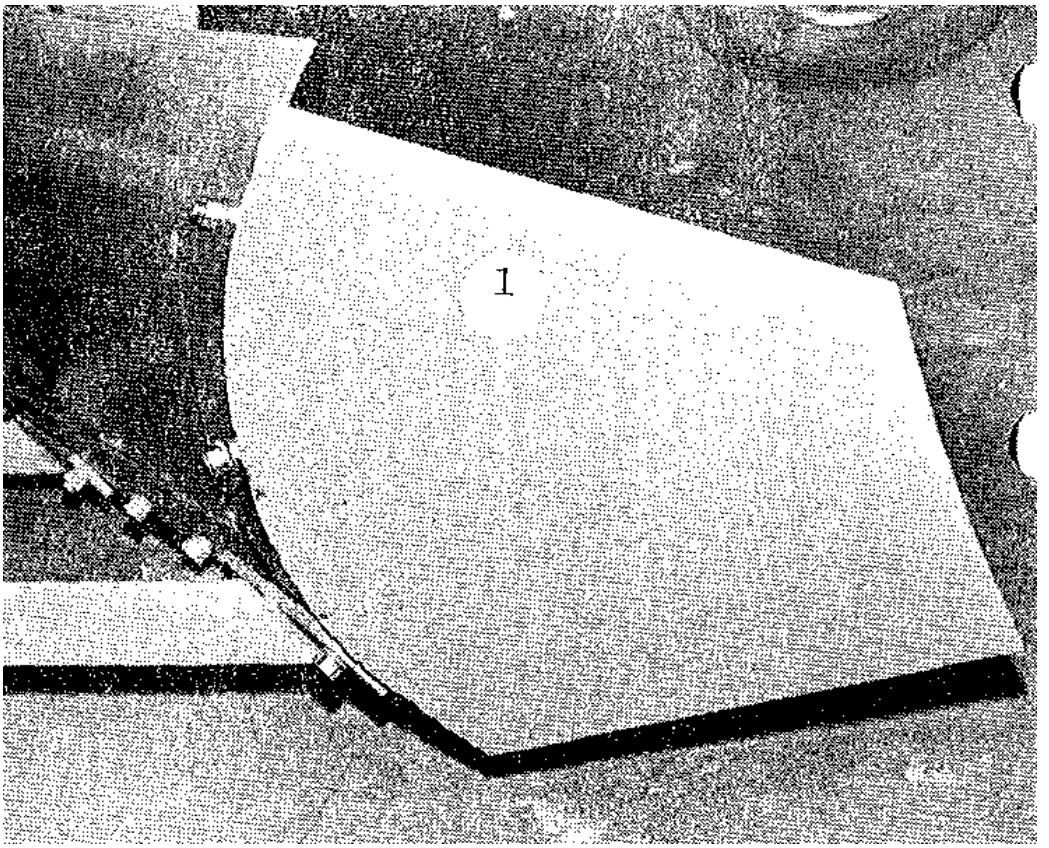

WING EXTENSIONS KIT- V151160			
ITEM	PART NUMBER	DISCRIPTION	QTY
1	005360	NUT, HES 1/2-13	4
2	005370	WASHER, LOCK 1/2	4
3	025390	BOLT, CRG 1/2-13 X 1-3/4	2
4	030470	BOLT, CRG 1/2-13 X 1-1/4	2
5	V151010	EXTENSION WLDT, LH WING	1
6	V151020	EXTENSION WLDT, RH WING	1

Extended Range Tripod

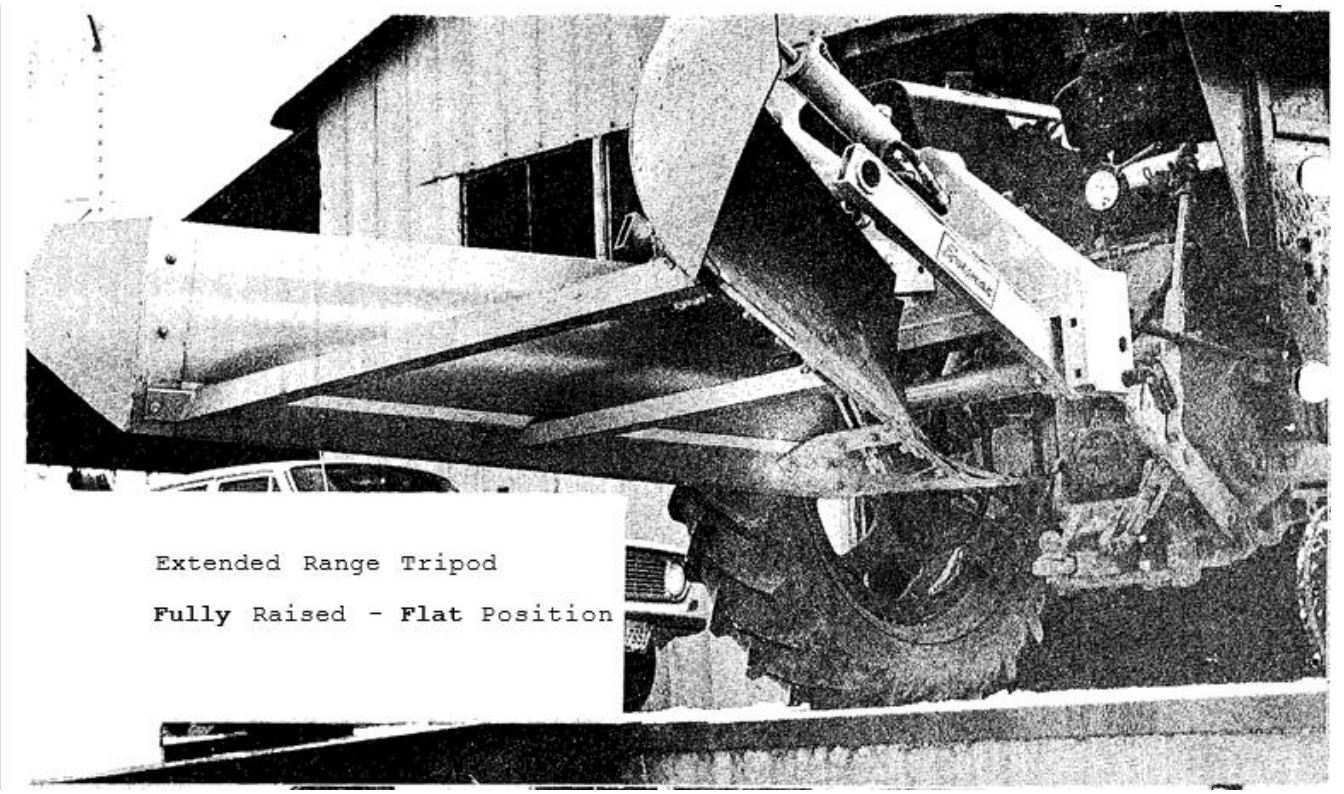

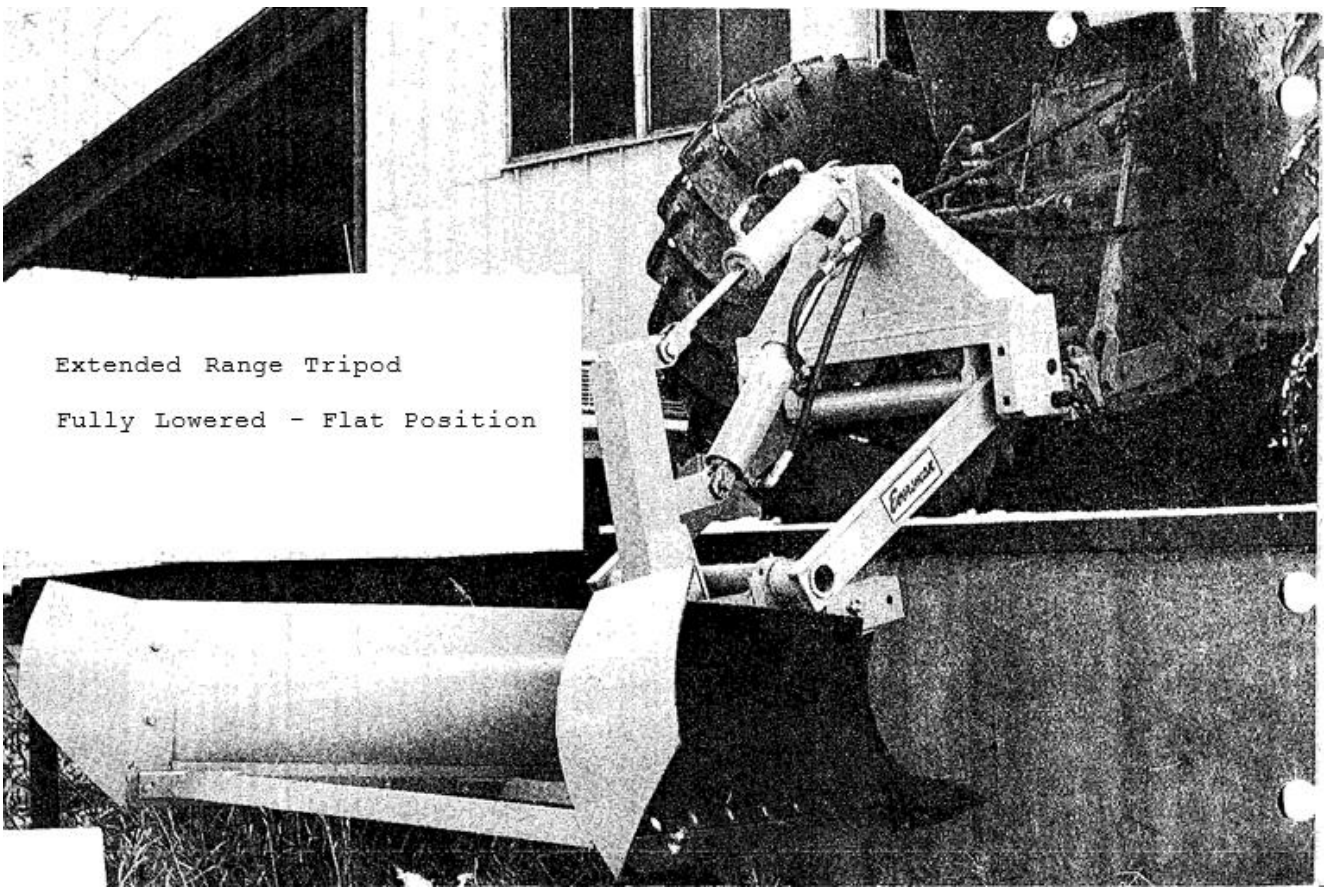

Extended Range Tripod

Extended Range Tripod
Fully Lowered
Maximum Tilt Position

- *SupRaMix®* - forage vertical tub mixer
  425, 500 or 710 cu. Ft. tub capacity
- Portable grinder mixer
  105 bu. with 20' HammerMill or 150 bu. with 26" HammerMill
- *GRIXXER*- grinder mixer
  Economical portable 105 bu. Grinder Mixer with 20" HammerMill-other options available
- CATTLEMAX-Cattle Processing
  105 bu. or 150 bu. with 20" RollerMill for cattle applications
- HammerMills
  26" electrically or PTO driver mill.
- RollerMills
  10", 20", 30" or 36" PTO or electrically driver mills
- SCALE SYSTEMS
  Electronic weighting equipment-from basic weighing to a computerized system.
  Platform Scales
  Universal Scales
  Small Animal Scales
  Mounting Scales
  Scale Accessories
  Indicators, single ingredient and hatching
- UFT Grain Drills
  10', 12' 15' and 20' seeding width
- Speedy Edible Bean Equipment
- Finishing Mowers
  60" or 72" Mid-Mount Mowers
  72" Rear-Mount Mowers
- Eversman PreSeeder
  15' to 30' tillage tool that prepares the ideal seed bed, incorporates chemicals and plants in one pass.
- Eversman Ditchers
  43" to 84" ditch width
  20" to 33" ditch depth
- Eversman Land Planes
  12', 16' 20' and 24' blade widths
- Sugar Beet Defoliators
  4 to 12 row defoliators with different row spacings. Optional hydraulic or mechanical scalpers.
- MEGAtater
  4-row potato harvester
- LoGAN -Potato Equipment
  Potato Harvesters, Potato Planters, Windrowers and Bulk Boxes
- *Art's-Way!UFT Flail Shredders*
  Various size cutting widths
- Grain Wagons
  350 bu. or 475 bu. center dump
  280 bu., 320 bu., 390 bu., or 470 bu. side dump

Art's-Way Manufacturing Co., Inc.

P.O. Box 288, Highway 9 West •Armstrong, Iowa 50514-0288
Phone: (712) 864-3131 •Fax: (712) 864-3154

Other Eversman Products
by Art's-Way

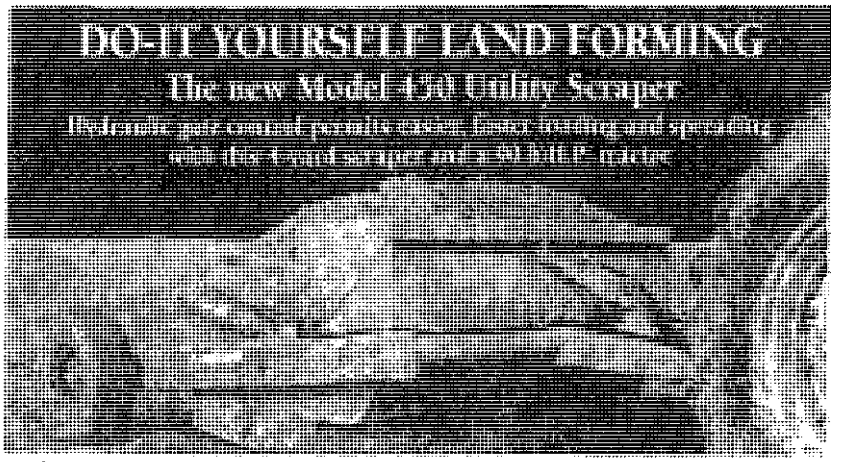

The Eversman Plane

This high speed plane, with S-tine a rn:d.· rumbler attachments, will smooth the field, h rporate chemicals and· prepare a seedbed in the same operation. Four-sizes· available;

The Eversman Grade Plane with Automatic Trip Blade
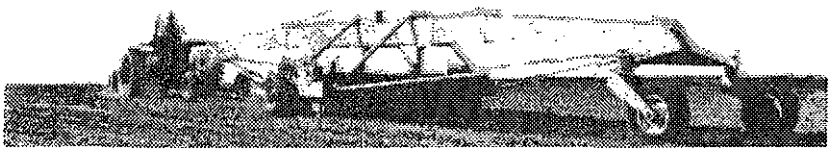
A large, rugged, precision land-smoother in- 55' and 70' lengths. 14' cutting blade.
With e.:'{dusive Eversman crank-axle Full castoring rear wheels and
swivel connection at fro,otton!& .l' ' i. fast, easy turns at held ends.