Defoliator

Models: 786 & 638

Operator's Manual

Art's-Way Manufacturing Co., Inc.

248880 (H)
0601

TO THE OWNER

Congratulations on the purchase of your new Art's-Way Defoliator. You have selected a top quality machine that is designed and built with pride to ensure that you have many years of efficient, reliable service.

Even if you are an experienced operator of this or similar equipment, ***we ask that you read the Operator's Manual before running this equipment.*** The way you operate, adjust and maintain this unit will have much to do with its successful performance. Any further questions you may have about this piece of Art's-Way equipment should be directed to your local Art's-Way dealer or to Art's-Way Manufacturing Co., Inc., Armstrong, Iowa 50514, (712) 864-3131.

Specifications And Design Are Subject To Change Without Notice

Art's-Way Manufacturing Co., Inc. is continually making product improvements. In doing so, we reserve the right to make changes or add improvements to our products without obligation for the equipment previously sold.

Because modifications to this defoliator may effect the performance, function and safety of its operation, no modifications are to be made without the written permission of Art's-Way Manufacturing Co., Inc. Any modifications made without the written permission of Art's-Way Manufacturing Co., Inc. shall void the warranty of this product.

In the interest of continued safe operation of this equipment, *pay particular attention to the safety alert symbol throughout this manual.*

Art's-Way Manufacturing Co., Inc. Statement of Liability

Art's-Way Manufacturing Co., Inc. recognizes its responsibility to provide its customers with a safe and efficient product. Art's-Way attempts to design and manufacture its product in accordance with accepted engineering practices in effect at the date of design. This statement should not be interpreted to mean that our products will protect against the user's own carelessness or failure to follow common safety practices as set forth in this manual, nor will Art's-Way be liable for any such act. In addition, Art's-Way assumes no liability for product altered or modified in any way by users or anyone other than an authorized dealer.

Important Warranty Information

The warranty for this Defoliator appears on page iv of this Manual. In order to establish proper warranty registration, the Warranty Registration and Dealer Pre-Delivery Checklist must be completed and returned to the factory. Failure to comply with this requirement may result in reduced warranty allowances.

PARTS AND SERVICE

As the new purchaser of your Defoliator, it is very important to consider the following factors:

A. Original Quality

B. Availability of Service Parts

C. Availability of adequate Service Facilities

Art's-Way Manufacturing Co., Inc. has an excellent dealership network ready to answer any questions you may have about your one-pass system. Parts for your machine may be ordered through our dealers. When placing a parts order, please have the model and serial number ready. This will allow the dealer to fill your order as quickly as possible.

For your convenience, we have provided this space for you to record your model number, serial number and the date of purchase, as well as your dealer's name and address.

Owner's Name: _____

Owner's Address: _____

Purchase Date: _____

Dealership Name: _____

Dealership Address: _____

Dealership Phone No.: _____

Machine Serial Number Location
(Located on left front corner of the frame)
Enter the serial number and model number
of your defoliator in the spaces provided above.

TABLE OF CONTENTS

To The Owner	i
Parts and Service	ii
Table of Contents	iii
Limited Warranty	iv
Safety First	v
Safety Guidelines	vi
Before Operation	vi
During Operation	vi
Maintenance Safety	vi
Hydraulic Safety	vii
Transportation Safety	vii
Storage Safety	viii
Assembly Safety	viii
Safety Decals	1
Safety Decal Locations	1
Safety Decals	2
Assembly	3
Tongue and PTO	3
Fixed Carrier Struts &Stabilizer Wheels	4
Steerable Carrier Wheel Struts	5
Knife Scalper	6
Mechanical Disc Scalper	7
Warning Light Kit	9
Preparing For Field Operation	11
Operation Speed	13
Row Spacing	13
Height Adjustment	13
Cleaning	14
Cover Removal	14
Flail Clusters	14
Replacing Flails	14
Drive Belt Tension	15
Knife Scalper	15
Mechanical Disc Scalper	16
Lubrication And Storage	17
Specifications	18

LIMITED WARRANTY

Art's-Way Manufacturing Co., Inc. warrants the products it sells to be free from defects in material and workmanship for a period of one (1) year after the date of delivery to the first purchaser, subject to the following conditions:

- **Art's-Way Manufacturing Co., Inc.** obligation and liability under this warranty is to repair or replace (at the company's option) any parts which, upon manufacture, were defective in material or workmanship.
- All parts and repairs under this warranty shall be supplied at an authorized **Art's-Way Manufacturing Co., Inc.** dealer or at the factory, at the option of **Art's-Way Manufacturing Co., Inc.**
- **Art's-Way Manufacturing Co., Inc.** warranty does not extend to parts and elements not manufactured by **Art's-Way Manufacturing Co., Inc.** and which carry the warranty of the other manufacturer.
- Transportation or shipping to an authorized dealer for necessary repairs is at the expense of the purchaser.
- **Art's-Way Manufacturing Co., Inc.** makes no other warranty expressed or implied and makes no warranty of merchantability or fitness for any particular purpose beyond that expressly stated in this warranty. **Art's-Way Manufacturing Co., Inc.** liability is limited to the terms set forth in this warranty and does not include any liability for direct, indirect, incidental or consequential damages or expenses of delay and the Company's liability is limited to repair or replacement of defective parts as set forth herein.
- Any improper use, and maintenance, including operation after discovery of defective or worn parts, operation beyond the rated capacity, substitution of parts not approved by **Art's-Way Manufacturing Co., Inc.** or any alteration or repair by other than an authorized **Art's-Way Manufacturing Co., Inc.** dealer which affects the product materially and adversely, shall void this warranty.
- No dealer, employee or representative is authorized to change this warranty in any way or grant any other warranty unless such change is made in writing and signed by an officer of **Art's-Way Manufacturing Co., Inc.** at its home office.
- Some states do not allow limitations on how long an implied warranty lasts or exclusions of, or limitations on relief such as incidental or consequential damages, so the above limitations or exclusions may not apply to you. This warranty gives you the specific legal rights and you may have other rights which vary from state to state.

SAFETY FIRST

Accidents can be prevented if the operator:

- Fully understands how the machine functions
- Knows the precautions and observes them
- Is careful to consider the safe action at all times.

Take note! This Safety Alert Symbol found throughout this manual is used to call your attention to instructions involving your personal safety and the safety of others. Failure to follow these instructions can result in injury or death.

THIS SYMBOL MEANS

ATTENTION !

BECOME ALERT !

YOUR SAFETY IS INVOLVED !

Signal Words: Note the use of the signal words DANGER, WARNING, and CAUTION on the Defoliator and in this Manual. The appropriate signal word for each has been selected using the following guidelines:

DANGER: Indicates an imminently hazardous situation that, if not avoided, *will* result in death or serious injury. This signal word is limited to the most extreme situations for machine components which for functional purposes cannot be guarded.

WARNING: Indicates a potentially hazardous situation that, if not avoided, *could* result in death or serious injury, and includes hazards that are exposed when guards are removed. It may also be used to alert against unsafe practices.

CAUTION: Indicates a potentially hazardous situation that, if not avoided, *may* result in minor or moderate injury. It may also be used to alert against unsafe practices.

Art's-Way Manufacturing Co., Inc. strives to make our equipment as safe as it can possibly be. The Defoliator conforms to applicable safety standards at the time of manufacturing. A safety conscious equipment operator makes an effective accident-prevention program complete.

Safety features and instructions for the Defoliator are detailed elsewhere in the Operator's Manual. It is the responsibility of the owner to ensure that **all** operators read and understand the Manual before they are allowed to operate the machine.

CAUTION: Remember, a careful operator is the best insurance against an accident.

CAUTION: *Read* and *Understand* the Operator's Manual and all the safety decals before operating the Defoliator. Review all safety instructions with all operators annually.

Before Operating

- Do not wear loose fitting clothing as it may catch in moving parts.
- Make sure to install and/or secure all guards and shields before starting or operating the Defoliator.
- Clear the area of bystanders, especially children, when making adjustments, repairs, or performing maintenance on the machine.
- Do not allow riders while transporting.
- Put all tractor and machine controls in *neutral* before starting. Follow the starting instructions according to your tractor Manual.
- Operate the Defoliator only while seated on the tractor seat.
- Make sure the unit is adequately supported with safety blocks or stands when working on it.

During Operation

- Keep hands, feet, hair and clothing away from moving parts.
- Keep all shields and guards in place and in good repair.
- Keep all children and bystanders away from the machine when in operation.
- Do not allow riders while the Defoliator is in operation.
- Do not attempt to unclog, clean or adjust machine while it is in operation.
- Before servicing, adjusting, or repairing the Defoliator, stop the tractor engine, place all controls in neutral, set the parking brake, remove the ignition key, and wait for all moving parts to stop.
- Stay away from overhead power lines. Electrocution can occur even without direct contact.
- Keep all hydraulic lines, fittings, and couplers tight and free of leaks. (See the Hydraulic Safety section below.)

Maintenance Safety

- Follow all operating, maintenance and safety instructions found in the Manual.
- Before servicing, adjusting, or repairing the Defoliator, stop the tractor engine, place all controls in neutral, set the parking brake, remove the ignition key and wait for all moving parts to stop.
- Use only the tools, jacks and hoists that are of sufficient capacity for the job.

- Use support blocks or safety stands when working under the machine.
- Follow the good shop practices of keeping the service area clean and dry and use adequate light for the job at hand.

Hydraulic Safety

- Before applying pressure from the hydraulic system, make sure all lines, fittings, and couplers are tight and in good condition.
- Relieve pressure from the hydraulic circuit before servicing or disconnecting from the tractor.
- Make sure all shields/guards are in place and properly secured when maintenance work is complete.
- Replace any worn, cut, abraded, flattened or crimped hoses.
- Do not make any temporary repairs to the hydraulic lines, fittings or hoses by using tape, clamps, or cement. The hydraulic system operates under extremely high pressure and temporary repairs may fail suddenly and create a hazardous situation.
- Wear proper hand and eye protection when searching for a high-pressure hydraulic leak. Use a piece of wood or cardboard as a backstop instead of hands to identify and isolate a leak. If injured by a concentrated high-pressure stream of hydraulic fluid, seek medical attention immediately. Serious infection or toxic reaction can develop if hydraulic fluid penetrates the surface of the skin.
- Before applying pressure to the system, make sure all components are tight and that the lines, hoses and couplings are not damaged.

Transportation Safety

- Be sure to comply with all local regulations regarding transporting equipment on public roads and highways.
- Do not allow riders while transporting.
- Make sure the Defoliator is securely attached to the tractor.
- Do not fail to latch the tractor brake pedals together.
- Do not exceed 10 MPH (16 km/h) when transporting the machine. Always reduce speed on rough roads and surfaces or when going down inclines.
- Drive slowly when turning and always use turn signals on the tractor to indicate your turning intentions to other traffic.
- Check clearances carefully when using the Defoliator.
- Stay away from overhead obstructions and power line during transport. Electrocution can occur even without direct contact.

Storage Safety

- Store the Defoliator in an area away from human activity.
- Do not permit children to play on or around the stored machine.
- Park the machine on firm level ground and block the gauge wheels.

Tire Safety

- Have a qualified tire dealer or repair service perform tire repairs.
- Do not attempt to install a tire on a wheel or rim unless you have the proper equipment and experience to do the job.
- Follow Proper procedures when installing a tire on a wheel or rim to prevent an explosion which could result in serious injury.
- Do not substitute tires of lesser road rating and capacity for the original equipment tires.

⚠ CAUTION: Failure to follow proper procedures when installing a tire on a wheel or rim can produce an explosion which may result in serious injury or death. Do not attempt to install a tire unless you have the proper equipment and experience to perform the job. Have it done by your dealer or a qualified tire repair service.

Assembly Safety

- Use adequate manpower to perform assembly procedures safely.
- Assemble the Defoliator in an area with sufficient space to maneuver the largest components and allow easy access to all sides of the machine.
- Use only forklifts, lift cranes, jacks and tools with sufficient capacity for the loads.
- Do not allow spectators in the working area.

Remember:
The Best Operator is a Safe Operator

786-638 SAFETY DECALS
DECAL LOCATIONS

The different types of safety decals for you Defoliator are illustrated on the following pages. Please familiarize yourself with the appearance of each decal, the warning it describes, and the area where it is located on the machine. Refer to the diagrams below for decal locations. The six digit number after the description on page 2, is the part number of that decal.

Safety awareness is the responsibility of ***each*** operator of the machine. Keep safety decals and signs clean and legible and verify any replacement parts display the current safety decals and signs as well. ***Remember: Always replace missing, damaged or illegible safety decals. New decals and signs are available from your dealer.***

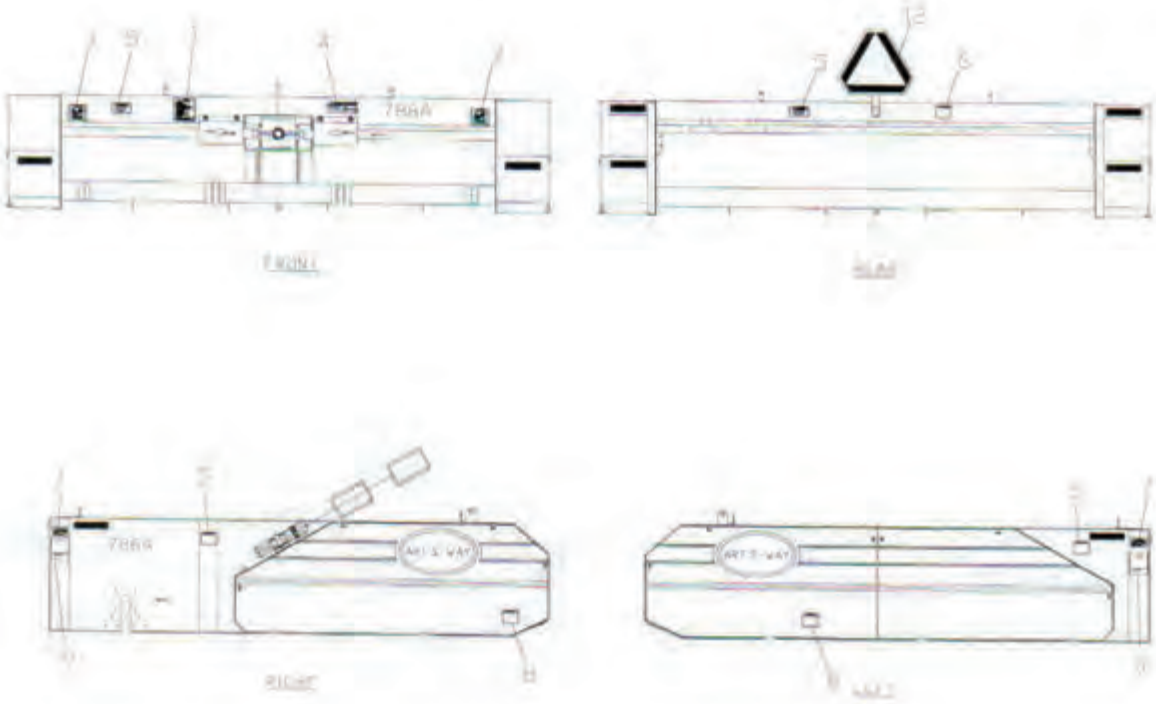

Note: *Keep all decals clean and free of dirt for maximum visibility. Replace any and all decals that are no longer legible. Read and obey all safety decals.*

SAFETY DECALS
IDENTIFICATION AND PART NUMBERS

1 – "Caution" – Lists Nine Instructions. Part #368040

4 – "Caution" – Hitching. Part #467460

5 – "WARNING" – Riders Falling Hazard. Part # 467420

6 – "WARNING" – High Pressure Fluid. Part #346310

7 – "WARNING" – Moving Parts Hazard. Part #467450

8 – "DANGER" – Shields Missing Hazard. Part #467430

9 – "WARNING" – Thrown Objects. Part #467400

11 – "DANGER" – Rotating Drive Line (located on PTO). Part #268860

12 – Slow Moving Vehicle Sign. Part #E224138

Note: *Keep all decals clean and free of dirt for maximum visibility. Replace any and all decals that are no longer legible. Read and* ***obey*** *all safety decals.*

786-638 ASSEMBLY
BASIC UNIT AND FIXED CARRIER WHEELS

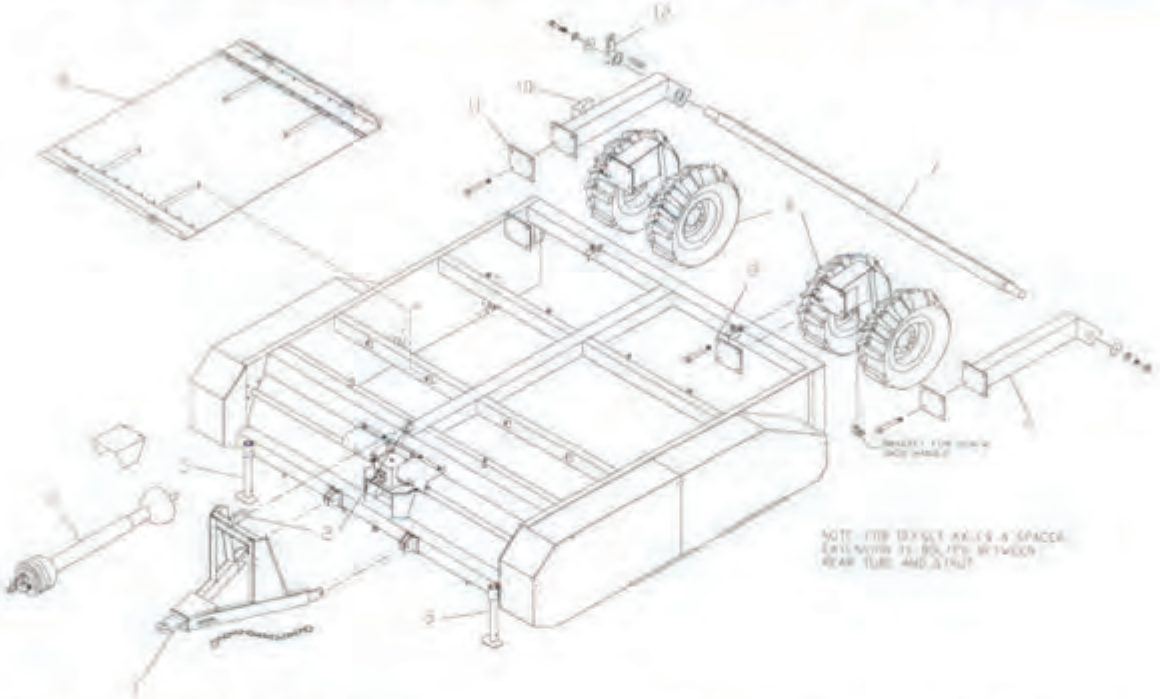

Figure 1. Assembly of 786-638 Defoliator.

1. **Tongue Assembly**
2. **Lift Cylinder Tabs**
3. **PTO**
4. **Carrier Wheels**
5. **Jackstands**
6. **LH Support Arm**
7. **Scalper Cross Tube**
8. **Rubber Top**
9. **Strut Backing Plate**
10. **RH Support Arm**
11. **Arm Backing Plate**
12. **Lift Arm Assembly**

Tongue and Power Take Off Assembly (See Figure 1).

1. Lift and block machine to a suitable height.

⚠ CAUTION: While working on the machine, be sure to work safely. Be sure to use adequate blocking. Use adequately rated lifting devises. Make sure parts are secured before working under or near them.

2. Assemble tongue (#1) to front of machine by removing the 2 pins in tongue assembly and installing into the pivot ears of the frame.

3. Install a 4" x 8" (min.) stroke hydraulic cylinder (not provided) to the upper hitch and frame tabs (#2). Attach the hoses (not provided) of sufficient length to reach the tractor hydraulic outlets.

4. Attach the PTO (#3) to the gearbox input shaft with 3/8" square x 2" key, 3/8" x 3" hex bolt & lock nut, and 3/8" x 1/2" socket head set screw.

5. Raise front of machine and lower jackstands (#5) to hold front of machine up.

Note: *The defoliator is shipped with the PTO loose. When attaching the PTO with the hardware supplied, attach the*

shield chain to the defoliator and to tractor. Ensure the PTO halves sliding tubes are free of dirt and foreign material. If the halves do not slide easily, premature failure of the universal joints could result.

Fixed Carrier Struts

1. Assemble two carrier struts (#4) to the rear tube of the defoliator frame. Using the backing plate (#9) and ¾" x 7-1/2" bolts, nuts, and lock washers. Also install bracket for the screw jack handle on the upper bolt. If using the struts with offset spindles, use spacer extension to move struts back. See item 3 for strut spacing.

2. Attach the four wheel and tire assemblies to the hubs of the carrier struts with the nuts provided. Position the spindle and wheel assembly to straddle the proper row width (22" on center for 22" rows and 24" for all others). ***Note:*** *The direction of the lugs on the tires.*

3. The carrier struts should be set to straddle the row as follows:

786

For **4-28" rows**, set the carrier struts so the wheels straddle the outer rows on each side: 29-1/8" from the inside of the frame to the centerline of the carrier strut, or 84" from centerline to centerline of the carrier struts.

For **4-30" rows**, set the carrier struts so the wheels straddle the outer rows on each side: 26-1/8" from the inside of the frame to the centerline of the carrier strut, or 90" from centerline to centerline of the carrier struts.

For **6-22" rows**, set carrier struts so the wheels straddle the outer rows on each side: 16-1/8" from the inside of the frame to the centerline of the carrier strut, or 110" from centerline to centerline of the carrier struts.

For **6-24" rows**, set the carrier struts so the wheels straddle the outer rows on each side: 11-1/8" from the inside of the frame to the centerline of the carrier strut, or 120" from centerline to centerline of the carrier struts.

638

For **8-22" rows**, set the carrier struts so the wheels straddle the outer rows on each side: 11-1/8" from the inside of the frame to the centerline of the carrier strut, or 154" from centerline to centerline of the carrier struts.

For **6-28" rows**, set the carrier struts so the wheels straddle the outer rows on each side: 18-1/8" from the inside of the frame to the centerline of the carrier strut, or 140" from centerline to centerline of the carrier struts.

For **6-30" rows**, set the carrier struts so the wheels straddle the outer rows on each side: 13-1/8" from the inside of the frame to the centerline of the carrier strut, or 150" from centerline to centerline of the carrier struts.

Flails

1. When shipping and handling the defoliator, the flails may become tucked under adjacent pins. They must be checked and pulled out so they are free swinging. Raise the top (#8) on the front and rear to gain access to this area.

Note: *Steel flails are secured to the defoliator with wire for shipping, the wire must be removed before starting the defoliator.*

786-638 STEERABLE CARRIER WHEEL ASSEMBLY

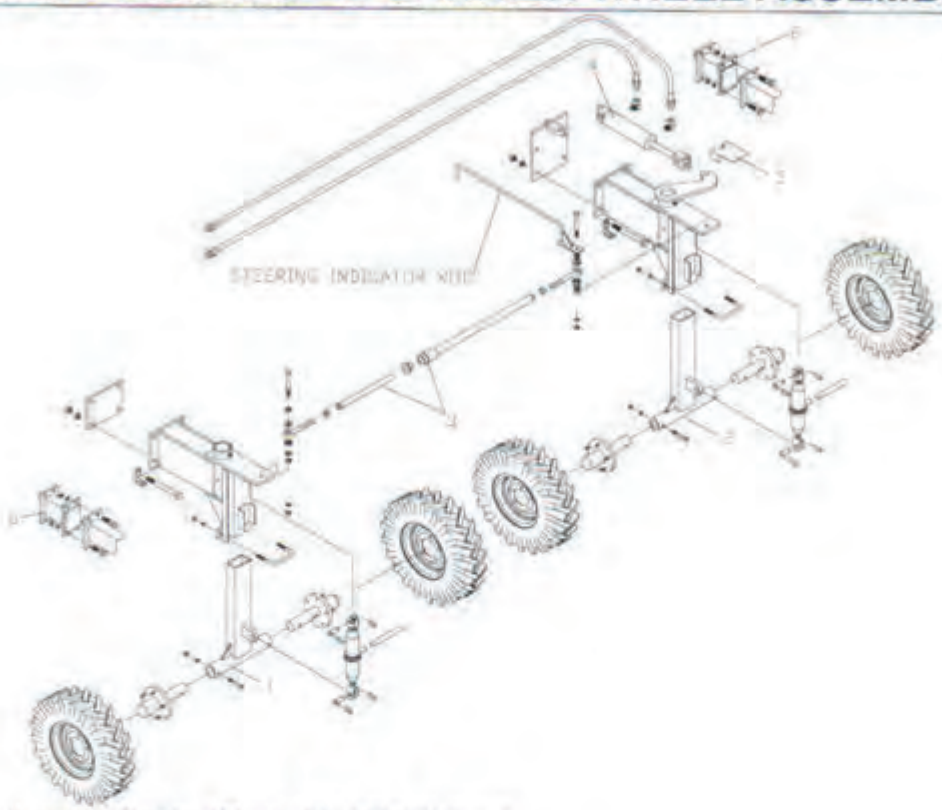

Figure 2. Steerable Carrier Wheels, 786-638 Defoliator.

1. Assemble the LH carrier strut (#1) and the RH carrier strut (#2) to the rear tube of the defoliator frame using the backing plates and 1" x 7-1/2" bolts as shown in **figure 2**. Use the same spacing as explained for the fixed carrier struts on page 4.

2. Attach the wheel & tire assemblies to hubs as shown. Position the spindles so the tires are 22" on center for 22" rows, and 24" for all other row spacings. ***Note** the direction of tire lugs.*

3. Attach the tie rod (#3) to the rear arm on the LH strut with the ¾" x 3-1/2" hex bolts, nuts, and lock washers. Attach the tie rod assembly and steering indicator rod to the RH strut the ¾" x 4" hex bolts. Set the tie rod length so the set of tires are exactly parallel with each other. Align the steering indicator rod with the strap on the mounting plate. Tighten all hardware.

4. Install a 3" dia. x 8" stoke hydraulic cylinder (#4) to the RH strut. With the hydraulic cylinder in the middle of its stroke, adjust the cylinder rod end clevis so the tires are straight with the machine.

5. Install elbows and hoses on hydraulic cylinder, route to the front, and secure. Loosen all four tie rod end nuts on the hydraulic cylinder, remove the two nuts, and install the shield (#5). Torque the tie rod end nuts gradually and equally up to 75 ft-lbs.

6. Attach hoses to the tractor and cycle cylinder until air is removed from the lines. Re-check tires to make sure they are parallel with each other.

SCALPER ASSEMBLY

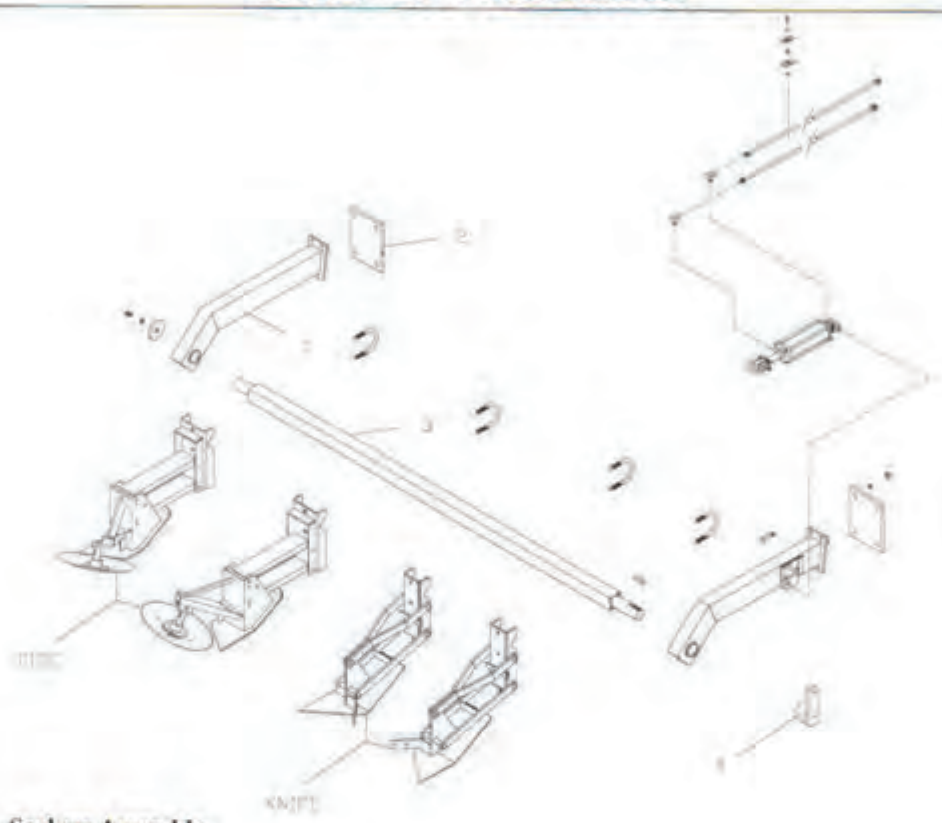

Figure 3. Scalper Assembly.

Knife or Disc Scalper Assembly

1. Assemble the LH side first. Assemble support arms (#1) to rear tube using backing plate (#2) and 5/8" x 7" bolts. See **figure 2, item #6,** steerable wheel assembly on page 5 for addition of the extensions if equipped with steerables or offset spindles.

2. For RH side, install support arm (#1) and lift arm (#4) with key onto cross tube (#3) first, then raise entire assembly into place. Install bolts and washers shown to secure the cross tube (#3) into the support arms (#1).

3. Install hydraulic cylinder (8" x 20-1/4" retracted length, not included) between tabs on the RH support arm and lift arm on the cross tube. Attach and secure hydraulic hoses (not provided) of sufficient length to reach the hydraulic outlets on the tractor. Fully extend cylinder and adjust the yoke so the supports of the knife or disc scalpers are perpendicular with the ground or bottom slightly ahead.

   Note: *Cylinder must have threaded yoke on one end to adjust length.*

Knife Scalper

1. Assemble scalper shoe assemblies, right-hand and left-hand, to mounting tube as shown. Be sure the cylinder is fully extended as explained in step 3. ***Note** the angle of the rear of the shoes. Position scalper unit so shoe is centered over row. Use U-clamps and ¾" nuts and washers to secure shoe assemblies to tube.*

2. Lift the scalper shoe assemblies and install the knives to the bar with clamp plate, ½" x 2" carriage bolts, nuts, and lock washers. Make sure knives are parallel with shoe edge. Set edge of the knife approximately ¼" below shoe. See **figure 4.**

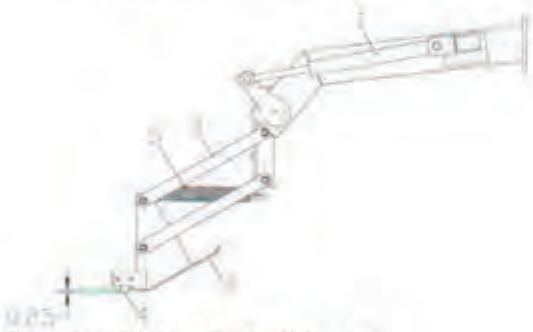

Figure 4. Scalper Knife & Spring.

1. **Cylinder**
2. **Scalper Shoe Bottom**
3. **Scalper Link Arm**
4. **Knife**
5. **Tension Spring**

Figure 4a. Spring Clamp.

3. Attach tension spring to the bar on the scalper-mounting bracket. Attach the other end of the spring to the chain and adjust to the appropriate hole in bar. Install clamp to the spring end as shown in **figure 4a.**

4. Adjust cylinder length so the mounting bracket is perpendicular with the ground or bottom slightly ahead. Adjust the scalper shoe bottom so it is parallel with the ground or slightly up at the front edge.

Mechanical Disc Scalper

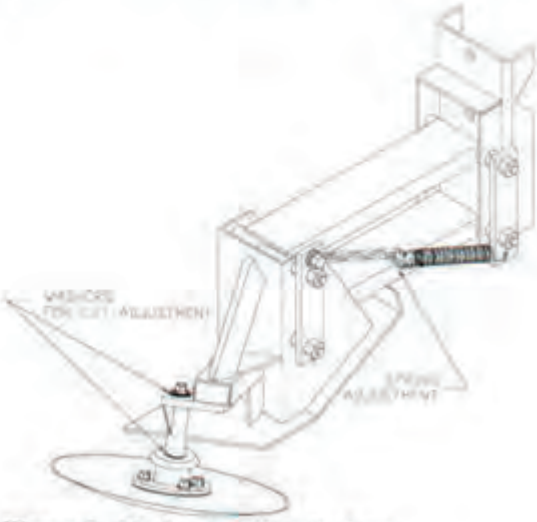

Figure 5. Mechanical Disc Scalper.

1. Assemble scalper shoe assemblies, right-hand and left-hand, to mounting tube as shown. Be sure the cylinder is fully extended as explained in step 3 on page 6. ***Note** the angle of the rear of the shoes. Position scalper unit so shoe is centered over row. Use U-clamps and ¾" nuts and washers to secure shoe assemblies to tube.*

2. Attach the tension spring on one end in the appropriate link of chain and to the flat bracket on the other end, see **figure 5**. Fasten the spring clamp as shown in **figure 4a**.

3. The addition or removal of washers can adjust the depth of cut. The distance from the bottom of the shoe to the lowest point of the disc is generally between ¾" and 1". Refer to **figure 5**.

4. Adjust the cylinder length so the mounting bracket is perpendicular to the ground or bottom slightly ahead. Adjust the scalper shoe so the bottom is parallel with the ground or slightly up at the front edge.

Mechanical Disc Scalper (2001)

Figure 5a. Mechanical Disc Scalper (2001) Cutting Depth Adjustment.

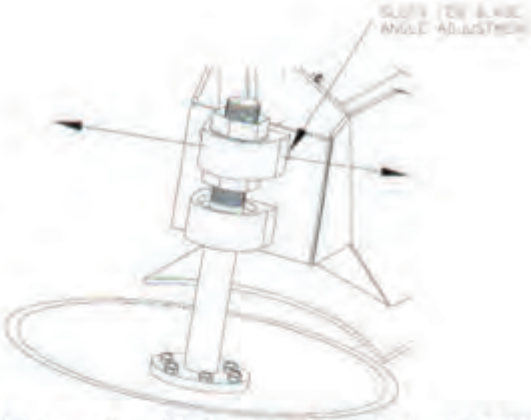

Figure 5b. Mechanical Disc Scalper (2001) Blade Angle Adjustment.

1. Assemble scalper shoe assemblies, right-hand and left-hand, to mounting tube as shown. Be sure the cylinder is fully extended as explained in step 3 on page 6. ***Note** the angle of the rear of the shoes. Position scalper unit so shoe is centered over row. Use U-clamps and ¾" nuts and washers to secure shoe assemblies to tube.*

2. The depth of cut is adjusted by loosening the set screws on the lower bearing and moving the two jam nuts on the scalper shaft, sliding the shaft up or down to attain the desired depth of cut, and then re-tightening the jam nuts and set screws. The distance from the bottom of the shoe to the lowest point of the disc is generally between ¾" and 1". Refer to **figure 5a**.

3. The side-to-side angle of the blade can be adjusted by loosening the two bolts on the top bearing and moving the bearing in the slots on the mounting plate. Re-tighten the bolts when finished. The top bearing is positioned at the factory in the center of the slots. **See figure 5b**.

LIGHT KIT ASSEMBLY

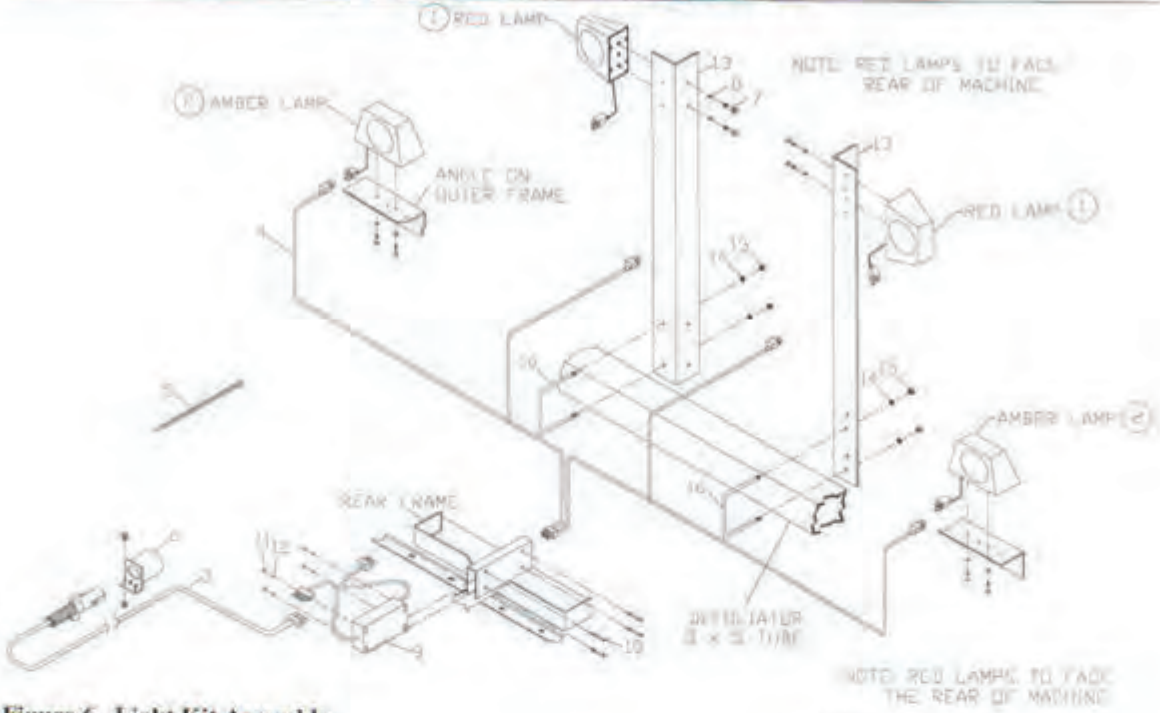

Figure 6. Light Kit Assembly.

GENERAL INFORMATION

This implement warning light kit is used on towed implements when the implement obscures the warning lamps on the towing vehicle.

The kit will also meet the lighting requirements for over 12' wide or that extend over 6' beyond the centerline of the towing vehicle.

The lamps will operate as turn signals when used in conjunction with a tractor equipped with turn signals.

This kit includes two warning lamps, tow tail lamps, 7-pin plug, and mounting hardware. The plug has additional capacity for work lights.

ASSEMBLY

All item numbers refer to **figure 6.**

1. Attach the defoliator to tractor.

CAUTION: Make sure PTO is disengaged, tractor is shut off and the key is in your pocket before working on the defoliator.

2. Assemble one amber warning lamp (#2) to the outer frame using lock washer (#8) and bolt (#7) on lamp. Repeat for the other warning lamp.

IMPORTANT: *The implement warning light kit is being used to satisfy width lighting requirements. The amber lamps must be located within 16" of the lateral extremities of the defoliator and must flash in unison with the towing vehicle warning lights.*

Locate warning lamps on implement as follows:

- Equal distance as possible from implement centerline.
- As far to the rear as possible.
- Visible from front and rear.
- At least 24" from base of lamp to ground.

BRACKET INSTALLATION

NOTE: red tail lamps ***MUST*** be symmetrical about centerline and 2' to 5' from center of machine respectively.

1. After warning lamps are located, locate angle brackets (#13, part #476490) on frame.

2. Secure brackets with 3/8" U-bolts (#16), lock washers (#14), and nuts (#15).

3. Now locate and secure red tail lamps to bracket.

LAMP INSTALLATION

1. Connect wires from warning lamps (#2) to terminals of wiring harness (#4).

2. Connect tail lamps (#1) to terminals of wiring harness (#4).

3. Connect primary harness (#3) to towing vehicle with 7-pin connector. Plug primary harness (#3) to converter module (#9).

4. Install converter module (#9) to defoliator frame using hardware provided. Plug the tail light harness (#4) into the converter module.

5. Check tail light operation. The amber lamps will flash in unison with the towing vehicle warning lights. The red tail lamps will light continuous when road lamps of towing vehicle are engaged. When signaling a left or right turn, the amber light opposite the turn will light continuous and the amber light in the direction of the turn will flash at an increased rate. The red light on the turn side will also flash with the amber light signaling the turn.

PREPARING FOR FIELD OPERATION

CAUTION: Make sure PTO is disengaged, tractor is shut off and the key is in your pocket before working on the defoliator.

REVIEWING THE MACHINE

Generally review the machine for:

- Any loose bolts or screws.
- Proper tensioning of drive belts.
- Proper PTO installation.
- Hydraulic cylinders and hoses being properly installed.
- Oil level in gearbox up to fill plug.
- All shields and guards being in place.
- Proper installation of any options.

HITCHING TO THE TRACTOR

1. Adjust front and rear wheels of the tractor to fit desired row spacing.

2. Adjust the tractor drawbar as shown in **figure 7** for 1000 RPM operation of PTO.

3. Position tractor near defoliator hitch, attach lift cylinder hoses to tractor outlets, activate cylinder and lift defoliator hitch above tractor hitch.

4. Attach the defoliator to the tractor with the yoke weldment and bolts provided with the tongue. Make sure the hardened washers (2) are between the ball of the hitch top and bottom and the plates of the yoke weldment.

5. Install the safety chain from loop on defoliator to tractor drawbar as shown in **figure 8**.

6. Connect PTO driveline to 1000 RPM tractor PTO shaft. Length of PTO from centerline of bearing crosses must be 55" to 60" installed.

7. Connect hydraulic hoses for scalper lift to tractor (if installed). Raise scalper units. Raise front of machine with main lift cylinder. Remove bolts and raise jack stands, replace bolts and secure jack stands in the up position.

8. Check the rubber flails to make sure they are free swinging and not tucked under adjacent rows, **see Rubber Flails on page 12.**

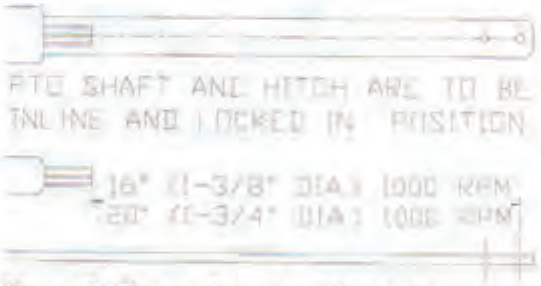

Figure 7. Tractor Drawbar Illustration.

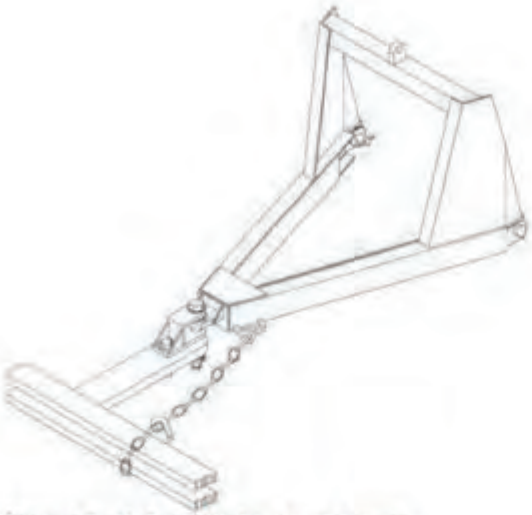

Figure 8. Safety Chain Attachment.

TEST RUN DEFOLIATOR

CAUTION: Keep well clear of moving parts. Be sure to shut off tractor and place key in your pocket while making adjustments. Wait for all movement to stop before approaching machine.

1. With tractor at an idle, slowly engage PTO. Check operation of machine. Slowly increase engine speed up to the proper PTO operating speed of 1000 RPM. Carefully check the operation, alignment, and clearances of all moving parts.

2. Shut down the defoliator and shut off the tractor. Once all movement has stopped, make any necessary adjustments.

3. After all adjustments are made, run the defoliator at operating speed for 10 to 15 minutes. Shut down the machine and once all parts have stopped, open the top covers (**figures 9A and 9B**) and re-check entire machine for any loose hardware and re-check the drives for belt tension and alignment.

Note: It is important that the defoliator be operated and adjusted correctly. The following section explains how to get the best service out of the machine.

Figure 9A. Open Top Covers, Front.

Figure 9B. Open Top Covers, Rear.

Figure 9C. Open Shield, RH Dive.

Figure 9D. Open Shield, LH Dive.

FIELD OPERATIONS & ADJUSTMENTS

OPERATING SPEED

1. The recommended ground speed is 2-3 mph. Adjust speed to your conditions.

Note: *University tests have proven excessive speed results in unnecessary loss.*

2. It is recommended that the defoliator be shut off when turning. Engage PTO with tractor at low RPM and "run-up" to full operating RPM gradually.

3. Be sure tractor drawbar is set as specified on page 11.

ROW SPACING

1. Make sure the rear wheels are set to straddle the row as explained on page 4.

2. Make sure the flail clusters are set so they are centered on the row and that the outer two clusters are set at the same distance from the edge of the machine.

3. Be sure to operate the defoliator on the rows as they were planted and not across guess rows.

HEIGHT ADJUSTMENT

1. Adjust the front rotor so approximately 1" to 1-1/2" of foliage is left on an average sized beet. Set this height by putting a stop on the front lift cylinder.

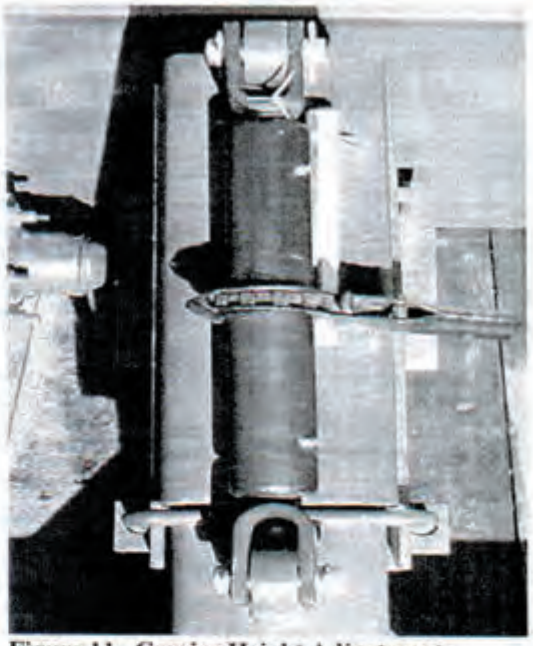

Figure 11. Carrier Height Adjustment.

2. Adjust the rear of the machine so the flail, when running, just sweeps the ground. This will be approximately 1" above the ground when not rotating. To adjust the height of the rear wheels **(see figure 11)**, loosen the 5/8" hex nuts on U-bolt **(shown in lower part of figure 11)**. Using the screwjack **(shown in center part of figure 11)**, move the machine up or down. Make sure both sides of the machine are moved the same distance. Be sure to tighten the U-bolts after adjustment is completed.

3. It is important that the rear flails just sweep the ground so that the trash is out of the way for harvesting.

Note: *Failure to loosen the U-bolt before adjusting the screwjack could result in damage to the screwjack or the defoliator.*

Note: Running the flails into the ground will take excessive power, prematurely wear the flails, and damage to the crop if improperly adjusted.

CLEANING

If conditions exist that cause excessive build up of mud and leaves, it is important to periodically clean the machine out.

CAUTION: While working on the machine, be sure to work safely. Be sure to use adequate blocking. Use adequately rated lifting devices. Make sure parts are secured before working under or near them.

CAUTION: Keep well clear of moving parts. Be sure to shut off tractor and place key in your pocket while making adjustments. Wait for all movement to stop before approaching machine.

COVER REMOVAL

The top covers lift at the front and rear of each side allowing access to the rotor and cluster area (**see figures 9A & 9B on page 11**). To open, remove pin from bracket and top angle and lift up the cover.

FLAIL CLUSTERS

To adjust flail clusters to row spacing, **see figures 12 & 13**. Loosen the disc clamp plates (A); slide clusters so they are exactly centered on the row. Retighten the disc clamping plates, making sure the gap between the plates is equal and in line with the other clusters.

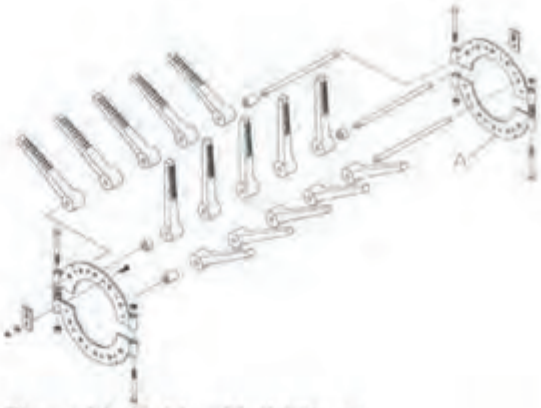

Figure 12. Rubber Flail Cluster.

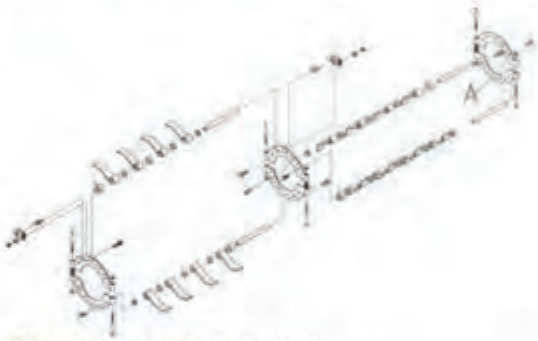

Figure 13. Steel Flail Cluster.

REPLACING RUBBER FLAILS

Frequently check flails. If any vibration occurs, check for broken or damaged flails, also check build-up that may cause an unbalanced condition or extreme flexing of rubber flails.

To replace flails, **see figure 12**.

1. Remove 3/8" carriage bolts and lock nuts which hold the pin clips. Loosen, drive off taper, and remove both clips. Now slide pin to one side and remove spacers and flails as needed.

Note: *Spacers and flails must be replaced in the same sequence as there were removed. If only single flails are exchanged, it is better to also replace the flail directly opposite to maintain balance.*

2. After flails and spacers are replaced, install pin clip by driving with a flat piece of steel and hammer into its position on the flail pin. Tighten the 3/8" carriage bolts and lock nuts securely on all pins.

REPLACING STEEL FLAILS

Frequently check flails. If any vibration occurs, check for broken or damaged flails, also check build-up that may cause an unbalanced condition.

The steel flail pins are held in place by 5/8"-11 x 1-1/4" grade 5 bolts on each end of the 1" diameter pin (**see figure 13**). These bolts are locktited in place and will be necessary to use an impact wrench to remove. In addition to the locktite, there is a retaining plate that captures the bolt head to insure the retention of the bolt during operation.

1. Remove the entire pin, with the flails and spacers, from between the plates (A). Replace flails as needed.

2. Before reinstallation, clean the bolt and the pin. Use Locktite 271 or better when the bolts are reinstalled. Torque these 5/8"-11 x 1-1/4" bolts to 150 ft-lbs. Make sure the bolt retaining plate is reassembled after the bolts have been torqued.

Note: *Spacers, flails and center mounting plate must be replaced in the same sequence as they were removed. If only single flails are exchanged, it is better to also exchange the flail directly opposite to maintain balance.*

DRIVE BELT TENSION

Drive belts are tensioned by spring loaded idlers (**see figure 14 & 15**). The compression springs are compressed to 5-1/4" (**see decal that is on the machine**). Note that with the rubber flails on the front rotor, the drive for the #1 rotor is on the RH side of the machine. Different sheaves are used also. These drives should be checked frequently and re-tensioned immediately if any belt slippage occurs. ***Do Not Over-tighten.***

Figure 14. RH Drives, Steel Flails.

Figure 15. LH Drives, Steel Flails.

KNIFE SCALPER

1. Adjust scalper shoe (**figure 16**, #1) so it is parallel with the ground or tipped up slightly in front. To do this, adjust the yoke of the hydraulic cylinder (#2) so that when fully extended the scalper shoe is at the correct position.

2. Make sure the tension spring is attached to the scalper assembly. It should hold the scalper shoe firmly to the ground.

3. The scalper knife (#3) should be set so it is parallel and straight with the edge of the shoe, 1/4" to 3/8" is recommended for an initial setting. Run the machine in the field and get one row adjusted to do the desired job. Then adjust the other rows to the same setting.

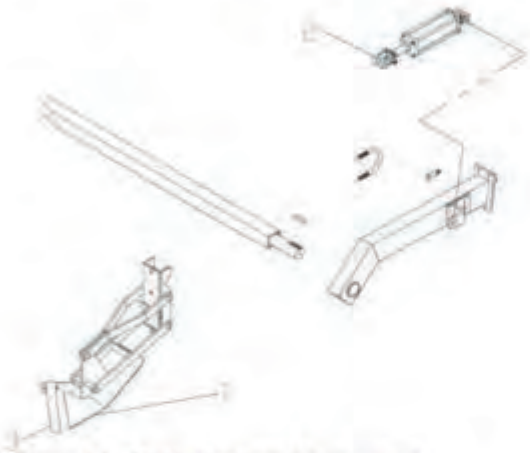

Figure 16. Knife Scalper Adjustment.

MECHANICAL DISC SCALPER

1. Adjust the spring tension by hooking spring in the appropriate link of chain (**see figure 17**).

2. See **pages 7 & 8** for procedures to fine-tune the scalper row unit.

3. Run the machine in the field and get one row properly adjusted, then adjust the other rows to that setting.

MECHANICAL DISC SCALPER (2001)

1. Adjust the spring tension with the nuts on the eyebolt (**see figure 17a).**

2. See **pages 7 & 8** for procedures to fine-tune the scalper row unit.

3. Run the machine in the field and get one row properly adjusted, then adjust the other rows to that setting.

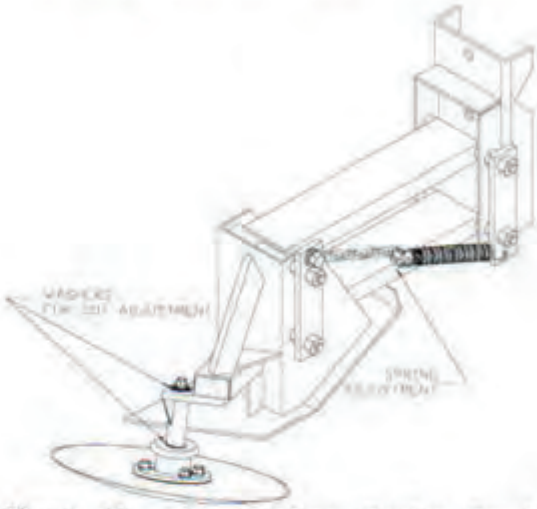

Figure 17. Disc Scalper Cutting Depth Adjustment.

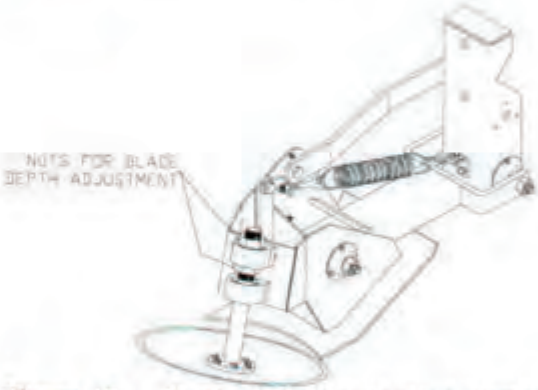

Figure 17a. Mechanical Disc Scalper (2001) Cutting Depth Adjustment.

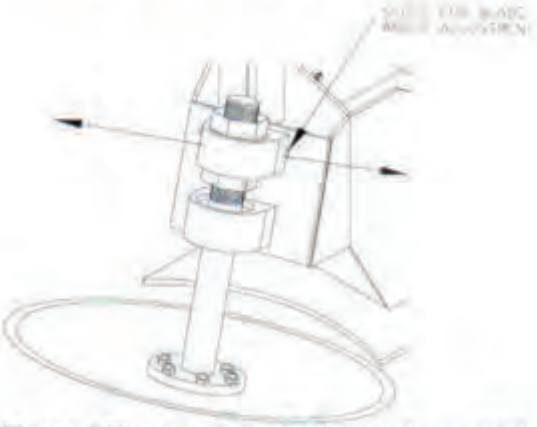

Figure 17b. Mechanical Disc Scalper (2001) Blade Angle Adjustment.

LUBRICATION AND STORAGE

LUBRICATION

Economical and efficient operation of any machine depends upon regular and adequate lubrication of moving parts. Neglect leads to reduced efficiency, premature wear, breakdown, and needless and costly replacement of parts.

CAUTION: Keep well clear of moving parts. Be sure to shut off the tractor and place key in pocket while making adjustments. Wait for all movement to stop before approaching machine.

LUBRICATE EVERY 10 HOURS.

1. U-Joints at the gearbox.
2. Belt drive idler pivot points.
3. Belt drive spring bolt slide areas.
4. Scalper lift support pivots.
5. Steerable wheel pivots if so equipped.

CV PTO – A high quality general-purpose grease may be used; however, a lithium based grease is recommended. ***Lubricate every 8 hours of operation.***

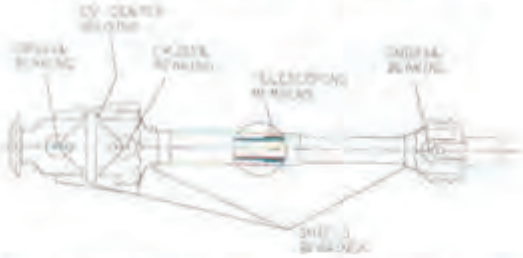

1. Cross & Bearings (3 places), fill until grease is purged around the seal (2-4 pumps).
2. CV Center Housing (1 place), fill until grease is evident around the center section disc (6-12 pumps).
3. Telescoping Members (1 place), fill until grease fills the telescoping area. Disassemble occasionally to ensure components are clean and adequately greased (4-8 pumps).
4. Shield Bearings (3 plastic zerks), 2 pumps.

IMPORTANT: *When making many sharp turns, grease the CV center housing at 4-hour intervals.*

IMPORTANT: *Failure to grease the CV center housing and telescoping members will reduce the life of the CV.*

LUBRICATE ONCE PER SEASON OR EVERY 500 HOURS.

1. Wheel bearings – clean and repack with wheel bearing grease.

BALL BEARINGS

NOTE: *The flanged bearings are sealed bearings. Lubricate sparingly, seal damage may result with over greasing. One or two pumps every 20 hours max. Diesel fuel squirted on the seals at the end of the season will help to keep seals soft and flexible.*

STORAGE

1. Clean the defoliator inside and out.
2. Lubricate the defoliator. Grease the threads of adjusting bolts. Run the machine briefly to distribute grease.
3. Paint all parts where paint is worn.
4. Remove tension from belts and make sure shields are in place.
5. If stored outside, remove top covers.
6. Block up the machines taking the load off the tires. **Do not deflate the tires.**

SPECIFICATIONS

786-4 Row 28" or 30" Row Spacing
786-6 Row 22" or 24" Row Spacing
638-6 Row 28" or 30" Row Spacing

Constant Velocity PTO	Standard Equipment	
Operating PTO Speed:	1000 RPM	
Tractor Requirements:	130-140 HP	
Drives:		
Gearbox:	Heavy Duty 1:1.5 Ratio	
Belts:	C-Section-Power Band	
Belt Tighteners:	Spring Loaded	
Rear Wheels:	Dual Fixed or Steerable, Height Adjustable	
Tires:	7.60-15 Ground Drive (4)	
Top Cover & Rear Drop:	Heavy Duty Belting (Between Rotor & Tires)	
	786	**638**
Row Spacing:	4-28" or 30" 6-22" or 24"	6-28" or 30"
Inside Width:	11'10"	14'8"
Operating Dimensions:	43"H x 14'3"W	43"H x 17'1"W
W/O Scalpers:	16'-6"L	16'6"L
W/Knife Scalpers:	20'-6"L	20'6"L
Shipping Dimensions: **34"H x 11'6" x**	14'3"W	17'1"W
Weight (Approx.):	5300 lbs.	6300 lbs.
Rotors – (See price list for combinations available)		
Height Adjustment:	Lift Cylinder in Front (not provided), Screw Jack at Wheels in Rear	
Drive Shields:	Designed for One Man Removal	

OPTIONS

Steel or Rubber Flails on Front or #1 Rotor

Scalper Attachment – Knife or Ground Driven Disc

Fixed or Steerable Rear Wheels

Cluster Width (see price list for choices available)