Illustrated Parts List

Model 2100
Forage and Receiver Box

Art's-Way Manufacturing Co., Inc.

710610

Issued November 2022

This symbol means ATTENTION! BECOME ALERT! YOUR SAFETY IS INVOLVED. The message that follows the symbol contains important information about your safety. Carefully read the message. Make sure you fully understand the causes of possible injury or death.

IF THIS MACHINE IS USED BY AN EMPLOYEE, IS LOANED, OR IS RENTED, MAKE SURE THAT THE OPERATOR UNDERSTANDS THE TWO INSTRUCTIONS BELOW.

BEFORE THE OPERATOR STARTS THE ENGINE:

GIVE INSTRUCTIONS TO THE OPERATOR ON SAFE AND CORRECT USE OF THE MACHINE.
MAKE SURE THE OPERATOR READS AND UNDERSTANDS THE OPERATOR'S MANUAL FOR THIS MACHINE.

WARNING

IMPROPER OPERATION OF THIS MACHINE CAN CAUSE INJURY OR DEATH.

BEFORE STARTING THE ENGINE, DO THE FOLLOWING:

1. READ THE OPERATOR'S MANUAL.

2. READ ALL SAFETY DECALS ON THE MACHINE.

3. CLEAR THE AREA OF OTHER PERSONS.

4. LEARN AND PRACTICE SAFE USE OF MACHINE CONTROLS IN A SAFE AND CLEAR AREA BEFORE YOU OPERATE THIS MACHINE ON A JOB SITE.

It is your responsibility to observe pertinent laws and regulations and to follow manufacturer's instructions on machine operation and maintenance.

See your Authorized Art's-Way Manufacturing Co., Inc. dealer or
Art's-Way Manufacturing Co., Inc. for additional operator's manuals, illustrated parts catalogs, and service manuals.

TO THE OWNER

Congratulations on the purchase of your new Art's-Way Forage and Receiver Box. You have selected a top quality machine that is designed and built with pride to ensure you have many years of efficient and reliable service.

Many people have worked on the design, production, and delivery of this Forage and Receiver Box. The information in this manual is based on the knowledge, study, and experience through years of specializing in the manufacturing of farm machinery. This manual is designed to provide you with important information regarding safety, maintenance, and machine operation so you can and will get the best possible performance from your Forage and Receiver Box.

Even if you are an experienced operator of this or similar equipment, we ask that you read this manual before operating this Forage and Receiver Box. The way you operate, adjust, and maintain this unit will have much to do with its successful performance. Any further questions you may have about this product of Art's-Way equipment should be directed to your local Art's-Way dealer or to Art's-Way Manufacturing Co., Inc. Armstrong, Iowa, 50514, (712) 864-3131.

SPECIFICATIONS AND DESIGN ARE SUBJECT TO CHANGE WITHOUT NOTICE

Art's-Way Manufacturing Co., Inc. is continually making product improvements. In doing so, we reserve the right to make changes and/or add improvements to our products without obligation for the equipment previously sold.

Modifications to this Forage and Receiver Box may affect the performance, function, and safety of its operation. Therefore, no modifications are to be made without the written permission of Art's-Way Manufacturing Co., Inc. Any modification made without the written permission of Art's-Way Mfg. Co. Inc. shall void the warranty of this product.

In the interest of continued safe operation of this Forage and Receiver Box, pay particular attention to the safety alert symbol(s) throughout this manual.

Art's-Way Manufacturing Co., Inc. STATEMENT OF PRODUCT LIABILITY

Art's-Way Manufacturing Co., Inc. recognizes its responsibility to provide customers with a safe and efficient product. Art's-Way Manufacturing Co., attempts to design and manufacture its products in accordance with all accepted engineering practices effective at the date of design. This statement should not be interpreted to mean that our products will protect against the user's own carelessness or failure to follow common safety practices nor will Art's-Way Manufacturing Co., be liable for any such act. In addition, Art's-Way Manufacturing Co., assumes no liability for any altered product or any modified product by users or anyone other than an authorized dealer.

IMPORTANT WARRANTY INFORMATION

The warranty information for this Forage and Receiver Box can be found on www.artsway-ag.com. There is also a seperate warrany document that accompanies this manual.

LIMITATIONS OF THIS MANUAL

This manual contains operating instructions for your 2100 Forage and Receiver Box only. Any mention of other machinery in this manual other than the 2100 Forage and Receiver Box is for reference only. This manual does not replace nor is it to be used for any machinery that may be attached to or used in conjunction with the 2100 Forage and Receiver Box.

PARTS & SERVICE

As the purchaser of your new forage box, it is very important to consider the following factors:

A. Original Quality

B. Availability of Service Parts

C. Availability of Adequate Service Facilities

Art's-Way Manufacturing Co., Inc. has an excellent dealership network ready to answer any questions you may have about your forage box. Parts for your machine may be ordered through our dealers. When placing a parts order, please have the **model** and **serial number** ready. This will allow the dealer to fill your order as quickly as possible.

For your convenience, we have provided this space for you to record your model number, serial number, and the date of purchase, as well as your dealer's name and address.

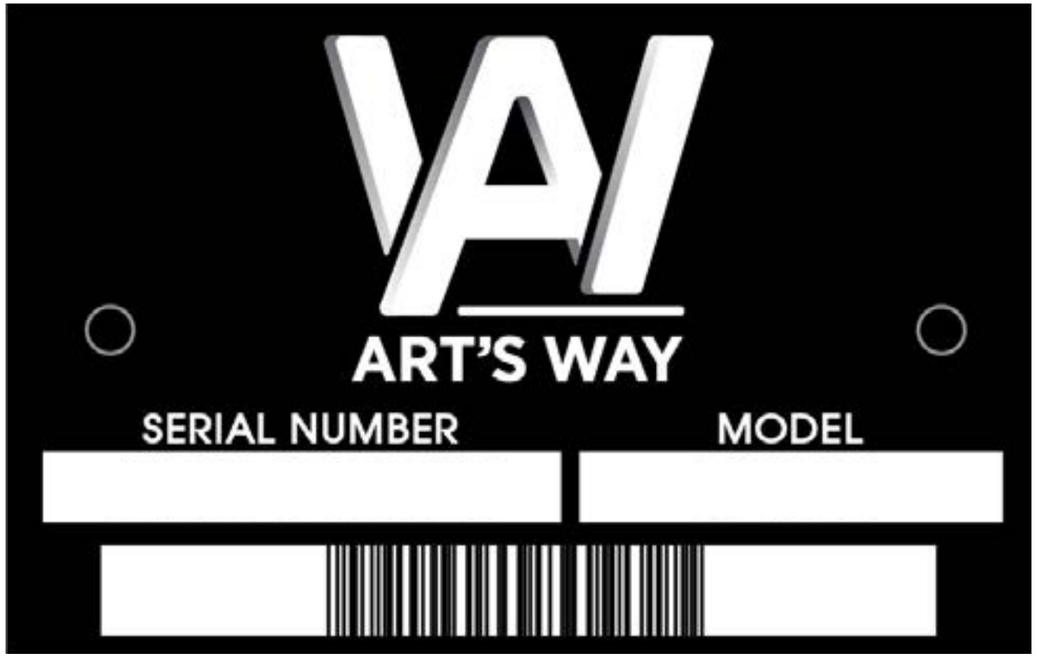

TABLE OF CONTENTS

TO THE OWNER 1
SPECIFICATIONS AND DESIGN ARE SUBJECT TO CHANGE WITHOUT NOTICE 1
Art's-Way Manufacturing Co., Inc. STATEMENT OF PRODUCT LIABILITY 1
IMPORTANT WARRANTY INFORMATION 1
LIMITATIONS OF THIS MANUAL 1
PARTS & SERVICE 2
TABLE OF CONTENTS 3-5
LIMITED WARRANTY 6
SAFETY FIRST 7
NOTICES OF DANGER, WARNING, AND CAUTION 7
Safety Instructions 8
GENERAL 8
BEFORE OPERATING 9
DURING OPERATION 9
MAINTENANCE SAFETY 9
HYDRAULIC SAFETY 10
TRANSPORTATION SAFETY 10
STORAGE SAFETY 10
TIRE SAFETY 11
ASSEMBLY SAFETY 11

TABLE OF CONTENTS

NAME	PAGE
~~ILLUSTRATED PARTS LIST: FORAGE BOX~~~~~	13
505 RUNNING GEAR	14
325 RUNNING GEAR	16
285 RUNNING GEAR	18
265 RUNNING GEAR	20
205 RUNNING GEAR	22
WHEEL ASSEMBLY (660540)	24
WHEEL ASSEMBLY (660545)	26
WHEEL ASSEMBLY (660550)	28
WHEEL ASSEMBLY (660555)	30
FRAME-FLOOR ASSEMBLY	32
STAKES-SIDES ASSEMBLY	34
REAR DRIVE ASSEMBLY (COMBO/REAR UNLOAD)	36
REAR DRIVE ASSEMBLY (FRONT UNLOAD)	38
FRONT SHELL ASSEMBLY (COMBO/FRONT UNLOAD)	40
FRONT SHELL ASSEMBLY (COMBO/FRONT UNLOAD) (CONTINUED)	42
FRONT SHELL ASSEMBLY (REAR UNLOAD)	44
FRONT DRIVE ASSEMBLY (COMBO/FRONT UNLOAD)	46
FRONT DRIVE ASSEMBLY (REAR UNLOAD)	48
SHELL-FRAME ASSEMBLY (COMBO/FRONT UNLOAD)	50
SHELL-FRAME ASSEMBLY (REAR UNLOAD)	52
SILLS-RAFTERS ASSEMBLY	54
APRON CHAINS ASSEMBLY	56
REAR DOOR ASSEMBLY (COMBO/REAR UNLOAD)	58
GATE DELAY ASSEMBLY (COMBO/REAR UNLOAD)	60
REAR DOOR ASSEMBLY (FRONT UNLOAD)	62
SIDE EXTENSIONS ASSEMBLY (COMBO/FRONT UNLOAD)	64
SIDE EXTENSIONS ASSEMBLY (REAR UNLOAD)	66
ROOF ASSEMBLY	68
WIND SCREEN (COMBO/FRONT UNLOAD)	70
SHELL FILLER ASSEMBLY (REAR UNLOAD)	72
EXTENSION FILLER ASSEMBLY (REAR UNLOAD)	74
DRIVE SYSTEM ASSEMBLY (HYD. IN CAB CONTROL)	76
DRIVE SYSTEM ASSEMBLY (HYD. MANUAL CONTROL)	78
OUTFEED ASSEMBLY (COMBO/FRONT UNLOAD)	80
HYDRAULICS ASSEMBLY (COMBO UNLOAD)	82
HYDRAULICS ASSEMBLY (FRONT UNLOAD)	84
HYDRAULICS ASSEMBLY (REAR UNLOAD)	86
HYDRAULICS DIAGRAM (INCAB COMBO UNLOAD)	88
HYDRAULICS DIAGRAM (INCAB COMBO UNLOAD W/ FILTER)	89
HYDRAULICS DIAGRAM (INCAB COMBO UNLOAD W/ DUMP)	90

TABLE OF CONTENTS

HYDRAULICS DIAGRAM (INCAB COMBO UNLOAD W/ FILTER & DUMP)	91
HYDRAULICS DIAGRAM (INCAB COMBO UNLOAD W/ FILTER & BLEED ORIFICE)	92
HYDRAULICS DIAGRAM (INCAB FRONT UNLOAD W/ FILTER & BLEED ORIFICE)	93
HYDRAULICS DIAGRAM (INCAB FRONT UNLOAD)	94
HYDRAULICS DIAGRAM (INCAB FRONT UNLOAD W/ FILTER & DUMP)	95
HYDRAULICS DIAGRAM (MANUAL COMBO UNLOAD)	96
HYDRAULICS DIAGRAM (MANUAL FRONT UNLOAD)	97
HYDRAULICS DIAGRAM (MANUAL REAR UNLOAD)	98
HYDRAULICS DIAGRAM (GATE DELAY)	99
MANIFOLD ASSEMBLY (INCAB COMBO/FRONT UNLOAD) (GEN 1)	100
MANIFOLD ASSEMBLY (MANUAL COMBO/FRONT UNLOAD)	102
MANIFOLD ASSEMBLY (MANUAL COMBO/FRONT UNLOAD) (CONTINUED)	104
ELECTRONICS ASSEMBLY	106
ELECTRONICS ASSEMBLY (MANUAL REAR UNLOAD)	108
ELECTRONICS DIAGRAM (INCAB COMBO/FRONT UNLOAD)	110
ELECTRONICS DIAGRAM (INCAB COMBO/FRONT UNLOAD W/ DUMP)	111
CONTROLLER HARNESS KIT	112
ELECTRONICS DIAGRAM (REAR UNLOAD)	113
SHIELDS ASSEMBLY	114
DECALS (FRONT/COMBO)	116
DECALS (REAR UNLOAD)	118
DECALS (FARM NAME)	120

WARRANTY INFORMATION MAY BE OBTAINED FROM WWW.ARTSWAY-AG.COM.

SAFETY FIRST

SAFETY INSTRUCTIONS

"A careful operator is the best insurance against an accident." Quote from the National Safety Council.

Most accidents can be prevented if the operator:

1. Fully understands how the machine functions.
2. Can anticipate situations which may produce problems.
3. Can make necessary corrections before problems develop.

THIS SYMBOL MEANS ATTENTION!

BECOME ALERT!

YOUR SAFETY IS INVOLVED!

- Universal Safety Alert Symbol

The American Society of Agricultural Engineers has adopted the Universal Safety Alert Symbol as a way to identify areas of potential danger if the equipment is not operated correctly. Please be alert whenever you see this symbol in the manuals or on your forage box.

Art's-Way Manufacturing Co., Inc. strives to make our equipment as safe as possible. The Art's-Way 2100 Forage and Receiver Box conforms to applicable safety standards at the time of manufacturing. A safety conscious equipment operator makes an effective accident-prevention program complete.

Safety features and instructions for the forage box are detailed in the Safety Guidelines section of this Operator's Manual. It is the responsibility of the owner to ensure that all operators read and understand the manual before they are allowed to operate the forage box. (Occupational Safety and Health Administration (OSHA) regulations 1928.57).

NOTICES OF DANGER, WARNING, AND CAUTION

Signal Words: Note the use of signal words **DANGER**, **WARNING**, and **CAUTION** on the forage box and in this manual. The appropriate signal word for each has been selected using the following guidelines:

⚠ DANGER

Indicates a hazardous situation which, if not avoided, will result in death or serious injury.

⚠ WARNING

Indicates a hazardous situation which, if not avoided, could result in death or serious injury.

⚠ CAUTION

Indicates a potentially hazardous situation which, if not avoided, could result in minor or moderate injury.

NOTICE

NOTICE is used to address practices not related to physical injury.

SAFETY INSTRUCTIONS

Safety instructions (or equivalent) signs indicate specific safety-related instructions or procedures.

Note: Contains additional information important to a procedure and will be found within the regular text body of this manual.

SAFETY INSTRUCTIONS

GENERAL

Most work related accidents are caused by failure to observe basic safety rules or precautions. An accident can often be avoided by recognizing potentially hazardous situations before an accident occurs. As you operate and maintain the forage box you must be alert to potential hazards. You should also have the necessary training, skills, and tools to perform any assembly procedure.

Improper operation and/or maintenance of this unit could cause a dangerous situation that results in injury or death.

Do not use this unit until you read and understand the information contained in this manual. Do not use this equipment for anything other than its intended purpose.

Safety precautions and warnings are provided in this manual and on the unit. If these hazard warnings are not heeded, bodily injury or death could occur to you or to other persons.

Art's-Way Manufacturing Co., Inc. cannot anticipate every possible circumstance that might involve a potential hazard. The warnings in this manual and on the product are, therefore, not all-inclusive. If a method of operation not specifically recommended by us is used, you must satisfy yourself that it is safe for you and for others. You should also ensure that the unit will not be damaged or be made unsafe by the methods that you choose.

The information, specifications, and illustrations in this manual are based on the information that was available at the time this material was written and can change at any time.

Safety Alert Symbols

This is the safety alert symbol. It is used to alert you to potential personal injury hazards. Obey all safety messages that follow this symbol to avoid possible injury or death.

This manual contains DANGERS, WARNINGS, CAUTIONS, NOTICES, SAFETY INSTRUCTIONS, and NOTES which must be followed to prevent the possibility of improper service, damage to the equipment, personal injury, or death. The following key words call the readers attention to potential hazards.

Hazards are identified by the "Safety Alert Symbol" and followed by a signal word such as "DANGER", "WARNING", or "CAUTION".

SAFETY INSTRUCTIONS

Remember:
"The Best Operator is a Safe Operator"

CAUTION

Read and understand the operator's manual and all the safety decals before operating the forage box. Review all safety instructions with all operators annually.

BEFORE OPERATING

SAFETY INSTRUCTIONS

Do not wear loose fitting clothing as it may catch in moving parts.

Make sure all guards and shields are installed, including the tractor power take-off (PTO) master shield, before starting or operating the forage box.

Be sure that the correct implement driveline parts are used and that they are properly secured.

Lower the lifter wheels when the forage box is not in use.

Install safety chain when attaching the forage box to the tractor.

Clear the area of bystanders, especially children, when making repairs, adjustments, or performing maintenance on the forage box.

Do not allow riders.

Put all tractor and machine controls in "neutral" and disengage the PTO before starting. Follow the starting instructions according to the OEM tractor manual.

Operate the forage box only while seated on the tractor seat.

Make sure the unit is adequately supported with safety blocks or safety stands when changing tires or performing maintenance.

DURING OPERATION

CAUTION

Entanglement Hazard
Keep hands, feet, hair, and clothing away from moving parts. Wait for all movement to stop before approaching equipment.
Before making adjustments:

1. **Shut off the tractor,**
2. **Set parking brake,**
3. **Put machine in neutral, and**
4. **Remove key while making adjustments.**

Keep all shields and guards in place and in good working condition.

Keep all bystanders, especially children, away from the forage box while in operation.

Do not allow riders while the forage box is in operation.

Do not attempt to unclog, clean, or adjust the forage box while it is running.

Stay away from overhead power lines. Electrocution can occur even without direct contact.

Keep all hydraulic lines, fittings, and couplers tight and free of leaks. (Refer to Safety Guidelines – Hydraulic Safety).

Use caution when ascending or descending on the forage box. Wet shoes or boots are slippery.

MAINTENANCE SAFETY

SAFETY INSTRUCTIONS

Follow all operating, maintenance, and safety instructions found in this Manual.

Before servicing, adjusting, repairing, or unclogging the machine, always make sure the tractor engine is stopped, key in your pocket, the machine is lowered to the ground, all controls are placed in neutral, the parking brake is set, and all the moving parts have stopped.

Use sufficient tools, jacks, and hoists that have the capacity for the job.

Use support blocks or safety stands when changing tires or performing maintenance.

Follow good shop practices of keeping the service area clean and dry, and use adequate light for the job at hand.

Before applying pressure to the hydraulic system, make sure all lines, fittings, and couplers are tightly secured and in good condition.

Make sure all shields/guards are in place and properly secured when performing maintenance.

HYDRAULIC SAFETY

SAFETY INSTRUCTIONS

Follow all operating, maintenance, and safety instructions found in this Manual.

Make sure components in the hydraulic system are kept clean and in good working condition.

Relieve pressure from the hydraulic system before servicing or disconnecting from the tractor.

Keep all hydraulic lines, fittings, and couplers tightly secured and free of leaks.

Replace any worn, cut, abraded, flattened, or crimped hoses.

Do not make any temporary repairs to the hydraulic lines, fittings, or hoses using tape, clamps, or cement. The hydraulic system operates under extremely high pressure and temporary repairs may fail suddenly and create a hazardous/dangerous situation.

Wear proper hand and eye protection when searching for a high-pressure hydraulic leak. Use a piece of wood or cardboard as a backstop instead of hands to identify and isolate a leak. If injured by a concentrated high-pressure stream of hydraulic fluid, seek medical attention immediately. Serious infection or toxic reaction can develop if hydraulic fluid penetrates the surface of the skin.

Before applying pressure to the system, make sure all components are tight and that the hydraulic lines, hoses, and couplings are not damaged.

TRANSPORTATION SAFETY

SAFETY INSTRUCTIONS

Follow all operating and safety instructions found in this manual when transporting this equipment.

Make sure the forage box complies with all local regulations regarding transporting equipment on public roads and highways.

Make sure the Slow Moving Vehicle (SMV) emblem and all lights and reflectors required by local highway and transportation authorities are properly in place, clean, and clearly visible to traffic.

Do not allow riders on any machinery during transport.

Make sure the forage box is securely attached to the tractor and install a safety chain to the forage box.

Make sure the tractor brake pedals are latched together.

Do not exceed 20 mph (32 km/h) when transporting the forage box. Always reduce speed on rough roads and surfaces, or when going down inclines.

Use caution when turning and always use the turn signals on the tractor to indicate your turning intentions to the other traffic.

The weight of the trailed machine should NEVER exceed the weight of the towing vehicle.

Check all clearances carefully whenever the machine is towed.

Lower the elevator into the transport position before transporting the forage box on the highway .

Stay away from overhead obstructions and power lines during transport. Electrocution can occur even without direct contact.

STORAGE SAFETY

SAFETY INSTRUCTIONS

Follow all operating and safety instructions found in this manual when storing this equipment.

Store the forage box in an area away from human activity.

Do not permit children to play on or around the stored machine at any time.

Make sure that the forage box is stored in an area with a firm and level base to prevent the machine from tipping or sinking into the ground.

Block the wheels to prevent the machine from rolling.

TIRE SAFETY

SAFETY INSTRUCTIONS

Follow all operating and safety instructions found in this manual when working around tires.

Have only a qualified tire dealer or tire repair service perform tire repairs.

Do not attempt to install a tire on a wheel or rim unless you have the proper equipment and experience to do the job.

Do not substitute tires with a lesser road rating and/or capacity for the original equipment tires.

⚠ WARNING

Explosive Force Hazard
Tire replacement, repair, and/or maintenance should be done by a qualified tire dealer or qualified repair service.

Failure to follow proper procedures when installing a tire on a wheel or rim can produce an explosive force that will result in serious injury or death.

Do not attempt to install a tire without proper equipment and experience to perform the job.

ASSEMBLY SAFETY

SAFETY INSTRUCTIONS

Follow all assembly, operating, and safety instructions found in this manual when assembly this equipment.

Use adequate manpower to perform assembly procedures safely.

Assemble the forage box in an area with sufficient space to maneuver the largest components and allow easy access to all sides of the machine.

Use only forklifts, lift cranes, jacks, and tools with sufficient capacity for the loads.

Do not allow spectators, especially children, in the working area.

THIS PAGE LEFT INTENTIONALLY BLANK

SECTION 1: ILLUSTRATED PARTS LIST

505 RUNNING GEAR

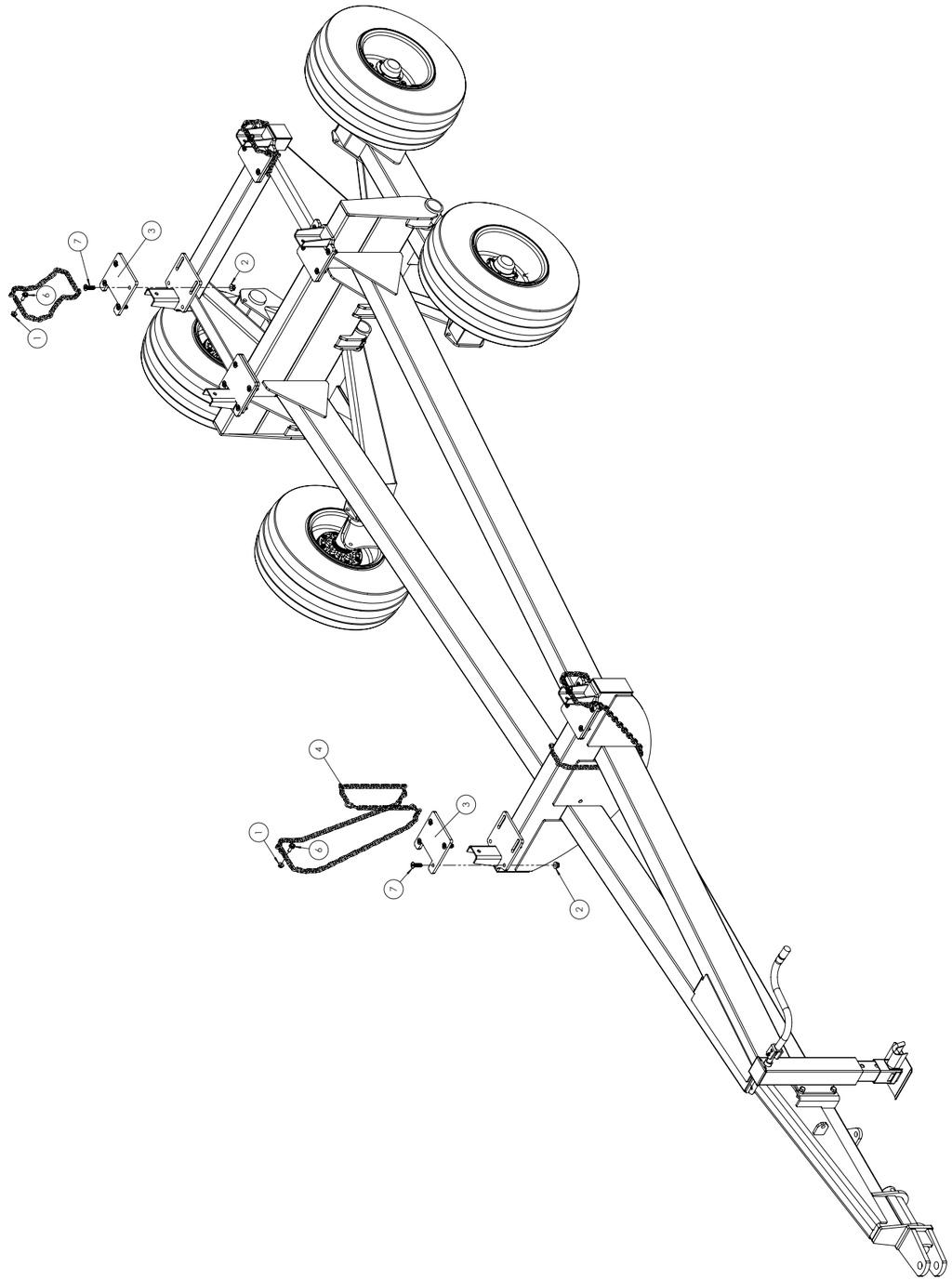

ITEM NO.	PART NUMBER	DESCRIPTION	QTY.
1	600140	NUT, HFH NYLOC 1/2-13	4
2	600150	NUT, HFH NYLOC 5/8-11	24
3	710702	BELTED RUBBER PAD	6
4	710882	CHAIN, TIE DOWN	2
5	710883	CHAIN, TIE DOWN	2
6	MP904557	HHDBLT - 1/2-13 X 1 WHZ	4
7	MP907620	SCREW, FHSCS 5/8-11 X 2"	24
FOR HORST SERVICE PARTS REFER TO THE MANUAL INCLUDED WITH THE HORST GEAR, OR VISIT WWW.HORSTWAGONS.COM			

325 RUNNING GEAR

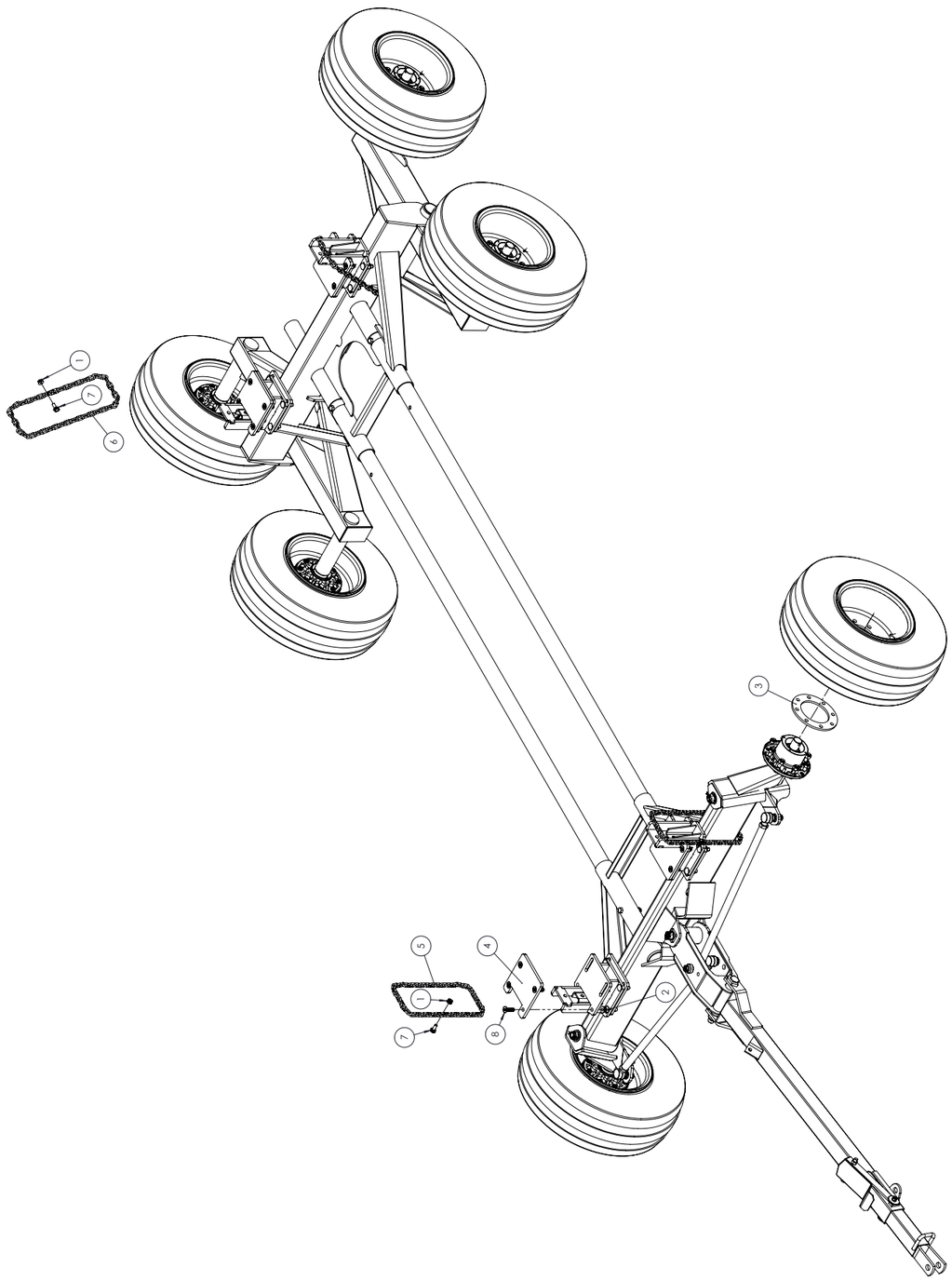

ITEM NO.	PART NUMBER	DESCRIPTION	QTY.
1	600140	NUT, HFH NYLOC 1/2-13	4
2	600150	NUT, HFH NYLOC 5/8-11	16
3	652470	3/8" 8 LUG	6
4	710702	BELTED RUBBER PAD	4
5	710880	CHAIN, TIE DOWN	2
6	710881	CHAIN, TIE DOWN	2
7	MP904557	HHDBLT - 1/2-13 X 1 WHZ	4
8	MP907620	SCREW, FHSCS 5/8-11 X 2"	16
FOR HORST SERVICE PARTS REFER TO THE MANUAL INCLUDED WITH THE HORST GEAR, OR VISIT WWW.HORSTWAGONS.COM			

285 RUNNING GEAR

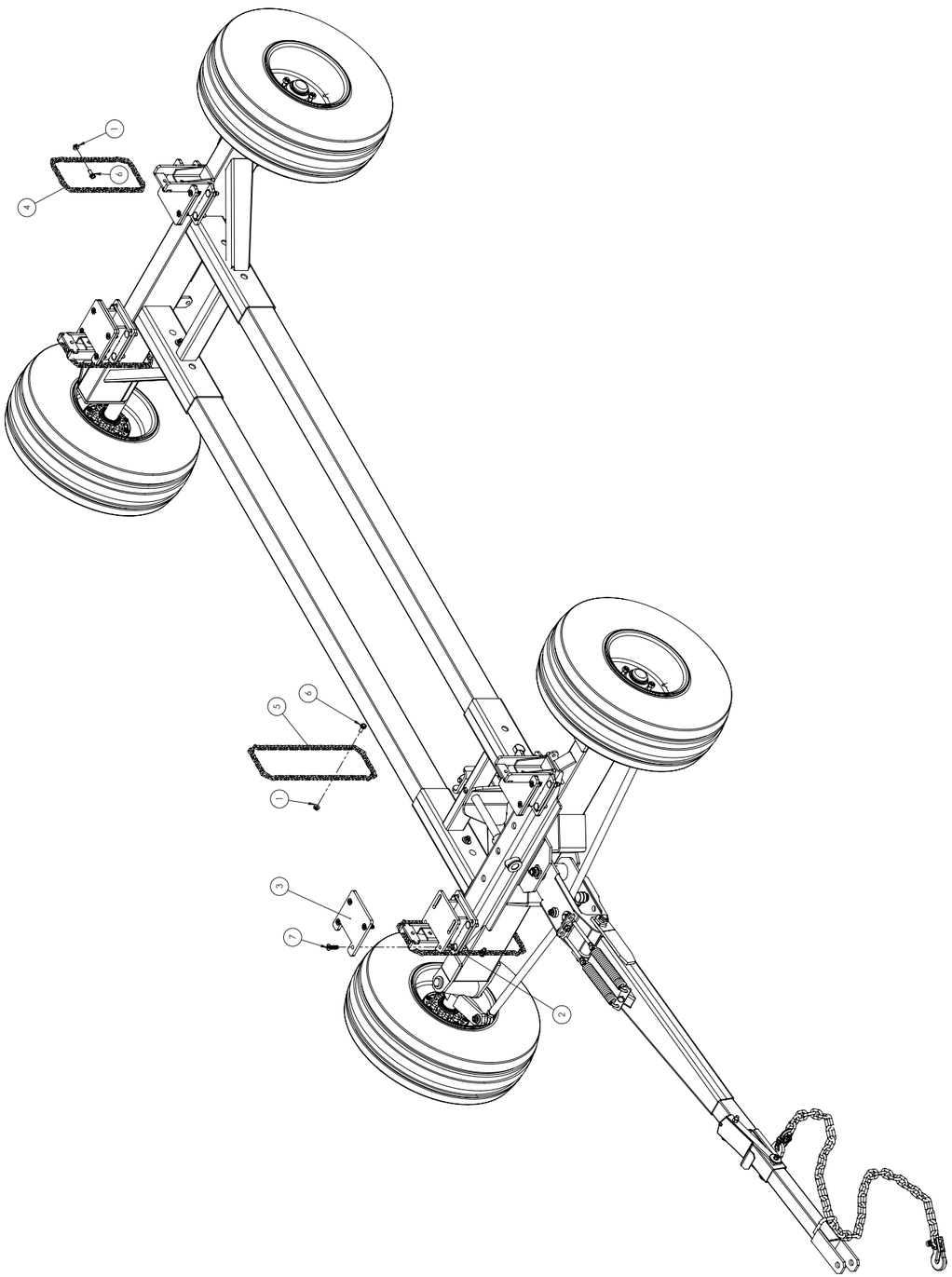

ITEM NO.	PART NUMBER	DESCRIPTION	QTY.
1	600140	NUT, HFH NYLOC 1/2-13	4
2	600150	NUT, HFH NYLOC 5/8-11	16
3	710702	BELTED RUBBER PAD	4
4	710880	CHAIN, TIE DOWN	2
5	710884	CHAIN, TIE DOWN	2
6	MP904557	HHDBLT - 1/2-13 X 1 WHZ	4
7	MP907620	SCREW, FHSCS 5/8-11 X 2"	16
FOR HORST SERVICE PARTS REFER TO THE MANUAL INCLUDED WITH THE HORST GEAR, OR VISIT WWW.HORSTWAGONS.COM			

265 RUNNING GEAR

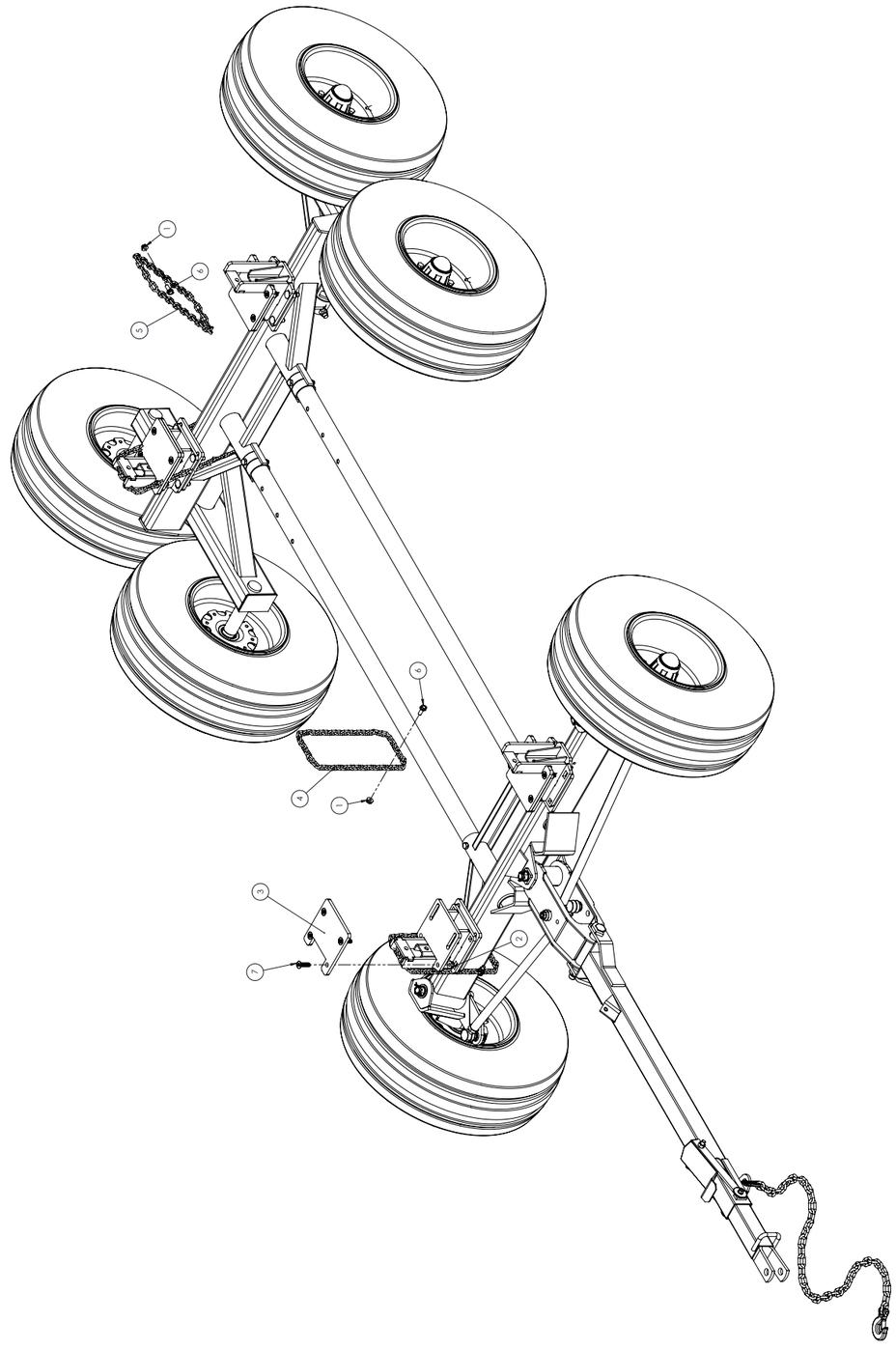

ITEM NO.	PART NUMBER	DESCRIPTION	QTY.
1	600140	NUT, HFH NYLOC 1/2-13	4
2	600150	NUT, HFH NYLOC 5/8-11	16
3	710702	BELTED RUBBER PAD	4
4	710880	CHAIN, TIE DOWN	2
5	710881	CHAIN, TIE DOWN	2
6	MP904557	HHDBLT - 1/2-13 X 1 WHZ	4
7	MP907620	SCREW, FHSCS 5/8-11 X 2"	16
FOR HORST SERVICE PARTS REFER TO THE MANUAL INCLUDED WITH THE HORST GEAR, OR VISIT WWW.HORSTWAGONS.COM			

205 RUNNING GEAR

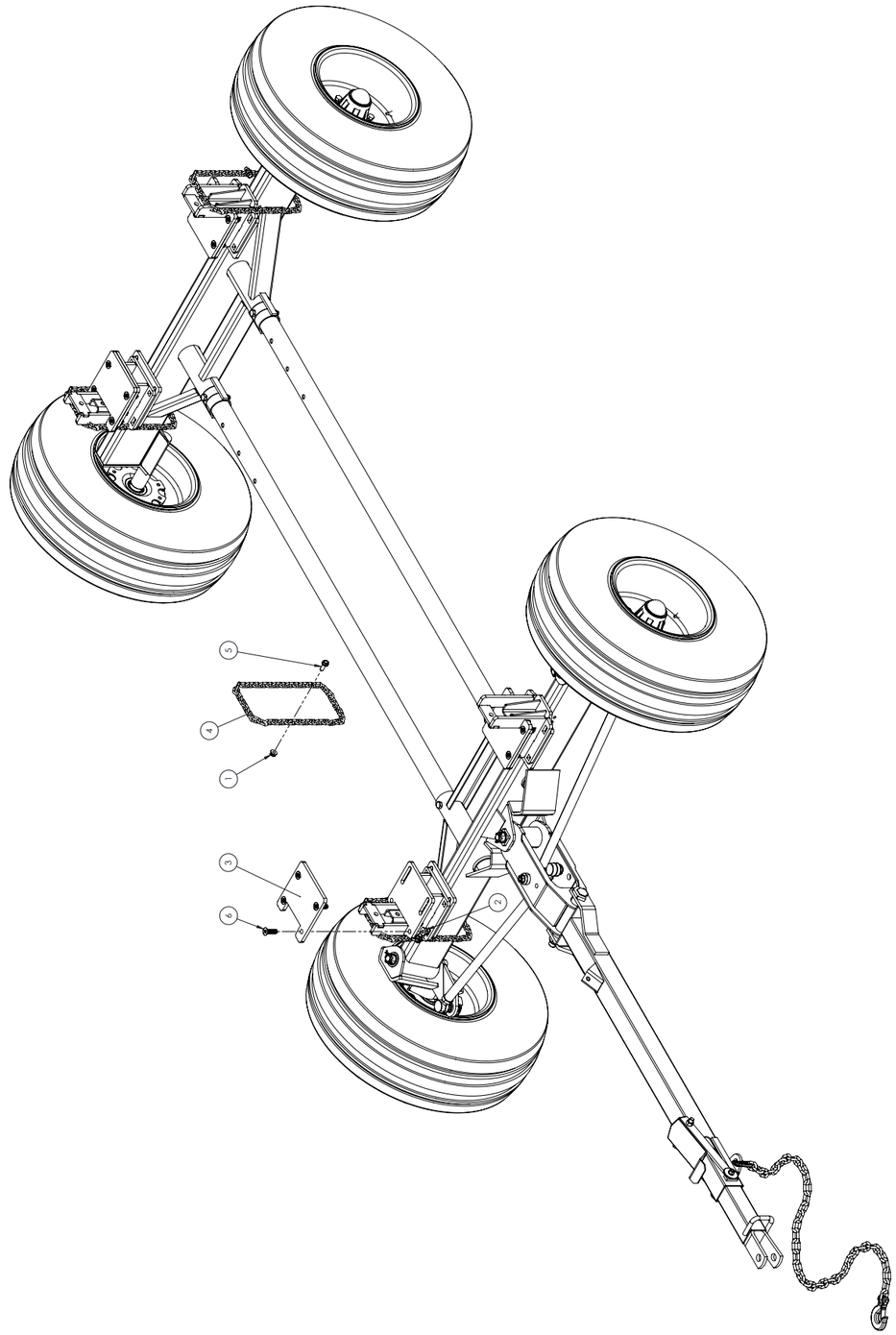

ITEM NO.	PART NUMBER	DESCRIPTION	QTY.
1	600140	NUT, HFH NYLOC 1/2-13	4
2	600150	NUT, HFH NYLOC 5/8-11	16
3	710702	BELTED RUBBER PAD	4
4	710885	CHAIN, TIE DOWN	4
5	MP904557	HHDBLT - 1/2-13 X 1 WHZ	4
6	MP907620	SCREW, FHSCS 5/8-11 X 2"	16
FOR HORST SERVICE PARTS REFER TO THE MANUAL INCLUDED WITH THE HORST GEAR, OR VISIT WWW.HORSTWAGONS.COM			

WHEEL ASSEMBLY (660540)

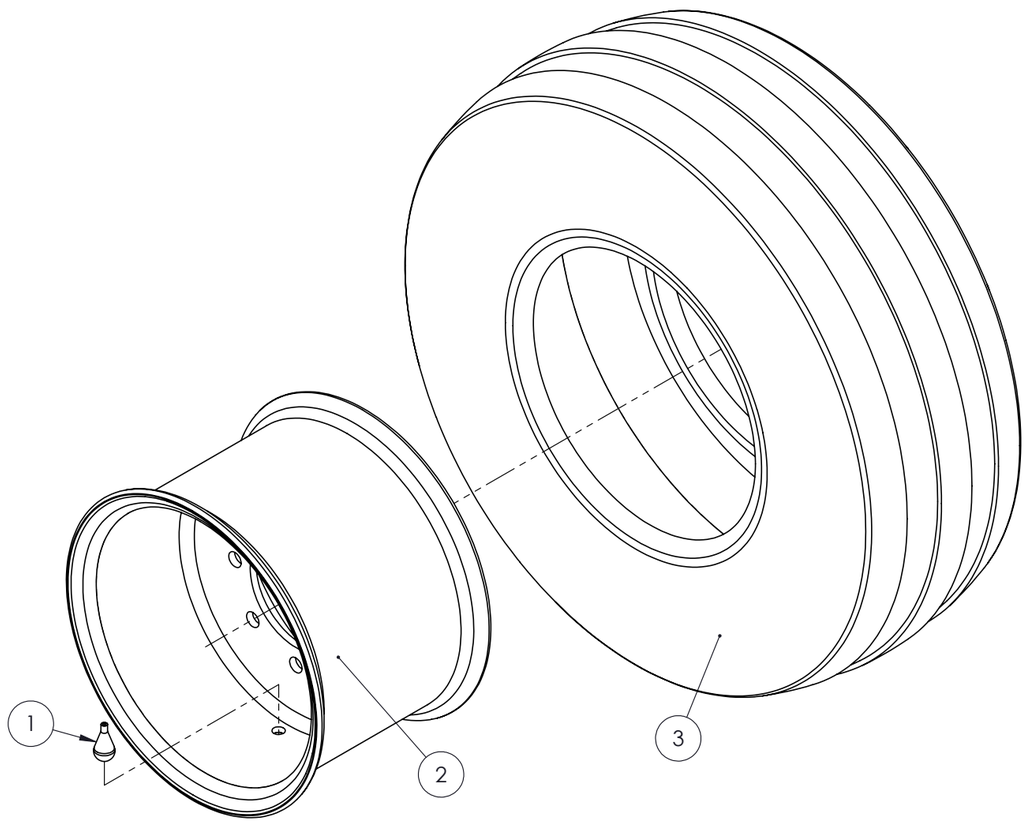

ITEM NO.	PART NUMBER	DESCRIPTION	QTY.
1	164420	VALVE STEM W/CAP	1
2	MP12.00090	RIM, 1.5" OFFSET	1
3	MP12.00100	TIRE, 425/65RX22.5	1

WHEEL ASSEMBLY (660545)

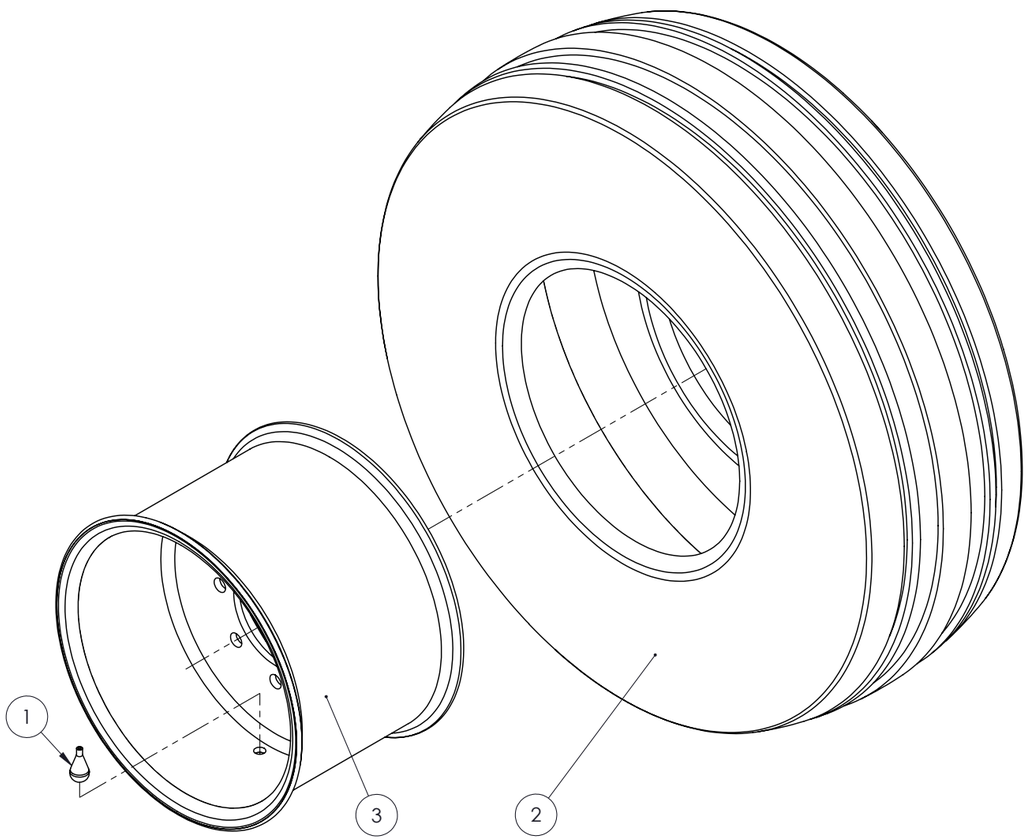

ITEM NO.	PART NUMBER	DESCRIPTION	QTY.
1	164420	VALVE STEM W/CAP	1
2	MP12.00097	TIRE, 425/65RX22.5	1
3	MP12.00103	RIM, 1.5" OFFSET	1

WHEEL ASSEMBLY (660550)

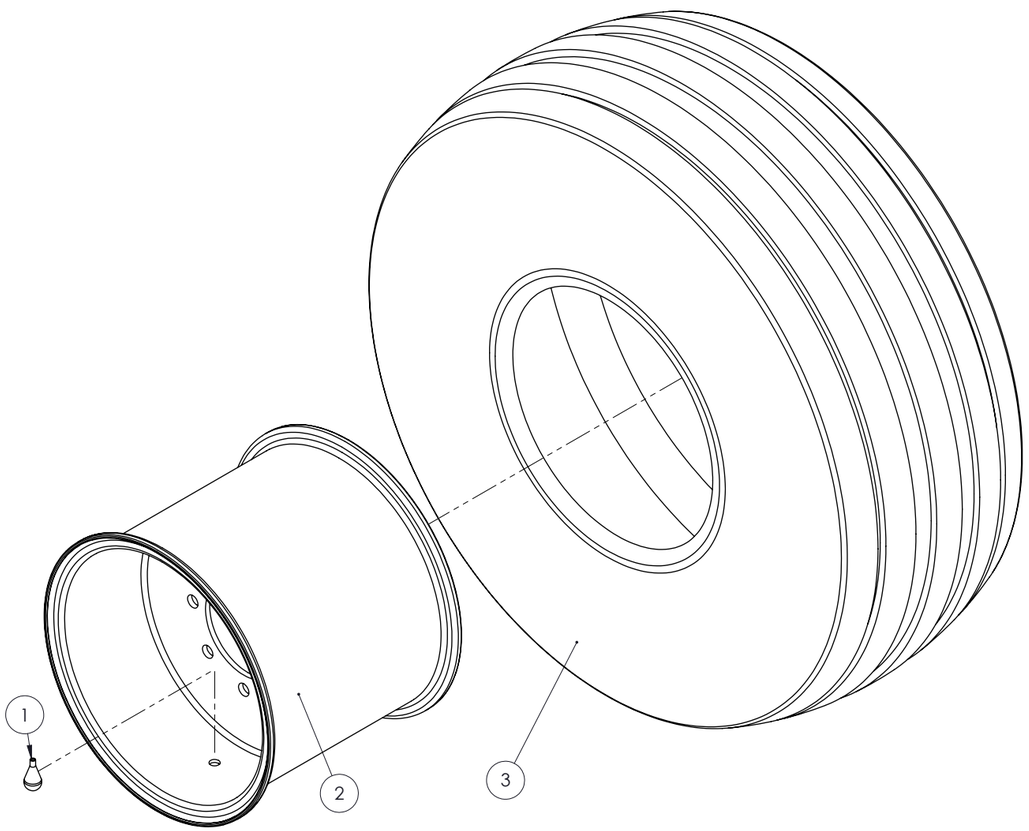

ITEM NO.	PART NUMBER	DESCRIPTION	QTY.
1	164420	VALVE STEM W/CAP	1
2	MP12.00114	RIM, 1.5" OFFSET	1
3	MP12.10740	TIRE, 425/65RX22.5	1

WHEEL ASSEMBLY (660555)

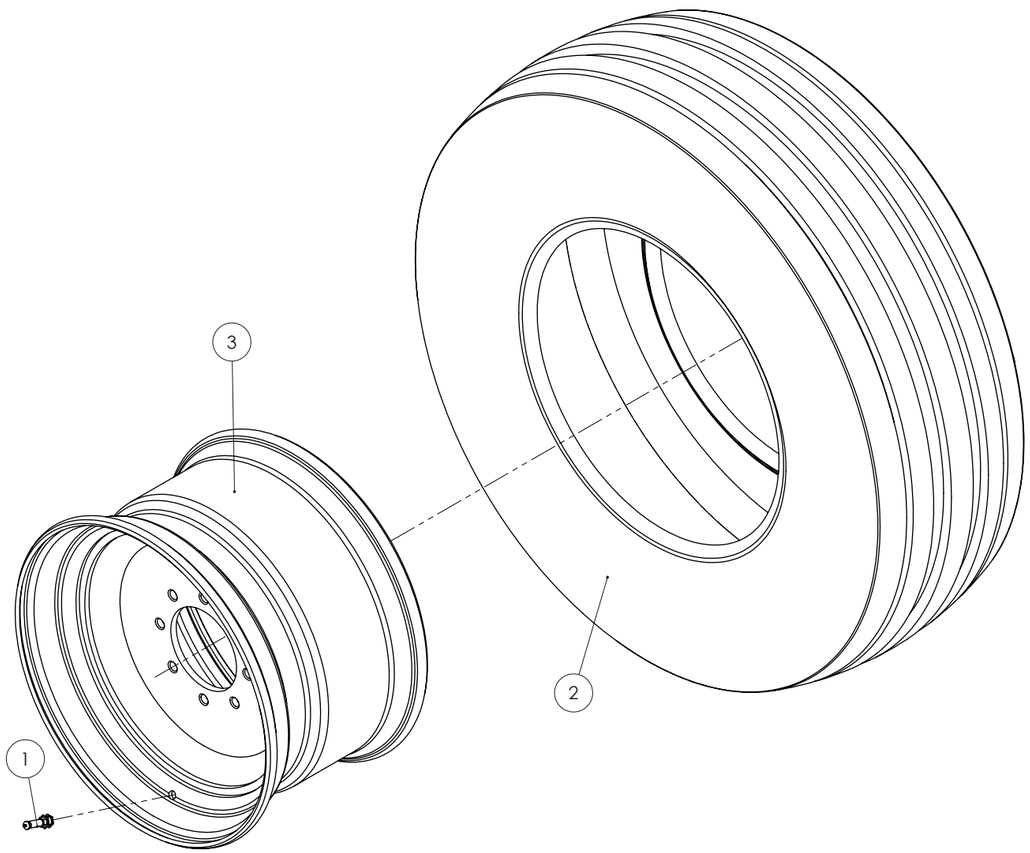

ITEM NO.	PART NUMBER	DESCRIPTION	QTY.
1	269490	STEEL VALVE STEM	1
2	MP12.09999	TIRE, 425/65RX22.5	1
3	MP12.10506	RIM, 22.5X13 8-BOLT	1

FRAME-FLOOR ASSEMBLY

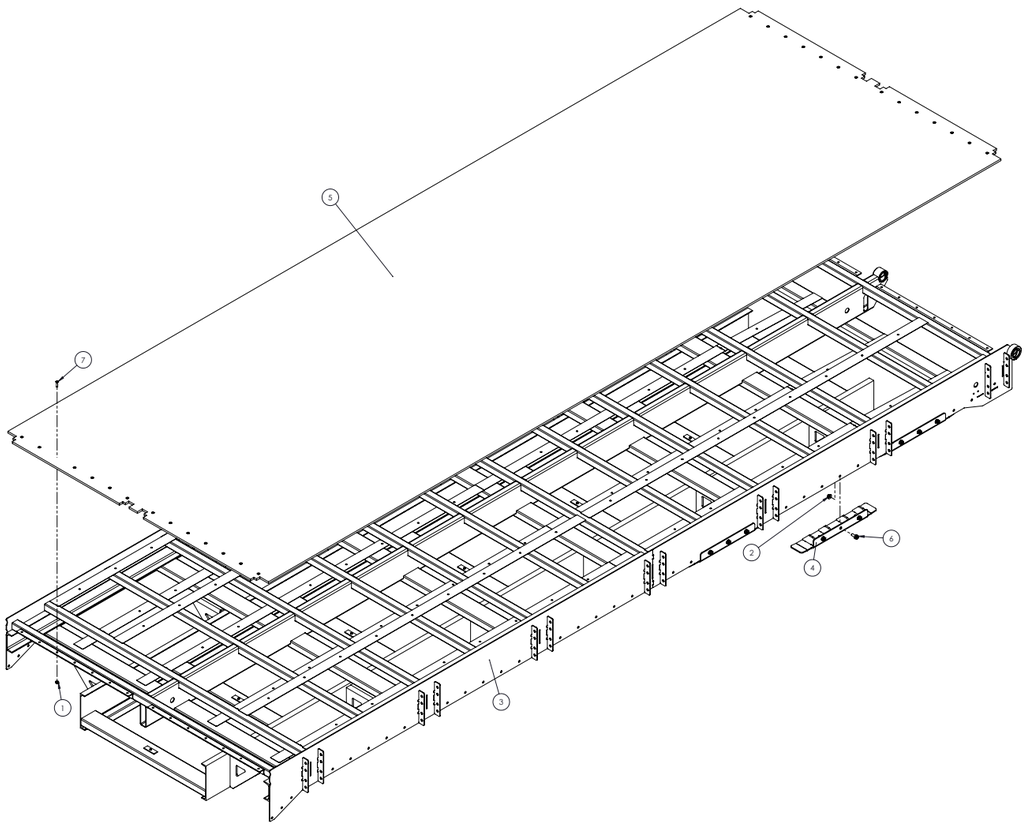

ITEM NO.	PART NUMBER	DESCRIPTION	QTY. (16')	QTY. (18')	QTY. (20')
1	600110	NUT, HFH NYLOC 5/16-18	28	28	28
2	600140	NUT, HFH NYLOC 1/2-13	18	18	18
3	710100	MAIN-FRAME-20' COMBO	-	-	1
	710200	MAIN-FRAME-18' COMBO	-	1	-
	710300	MAIN-FRAME-16' COMBO	1	-	-
4	710400	BUMP STOP BRACE WELDMENT	4	4	6
5	710705	SINGLE PIECE FLOOR 20'	-	-	1
	710706	SINGLE PIECE FLOOR 18'	-	1	
	710707	SINGLE PIECE FLOOR 16'	1	-	-
6	MP904557	HHDBLT - 1/2-13 X 1 WHZ	18	18	18
7	MP907624	SCREW - FHSCS 5/16-18 X	28	28	28
20' BOX SHOWN					

STAKES-SIDES ASSEMBLY

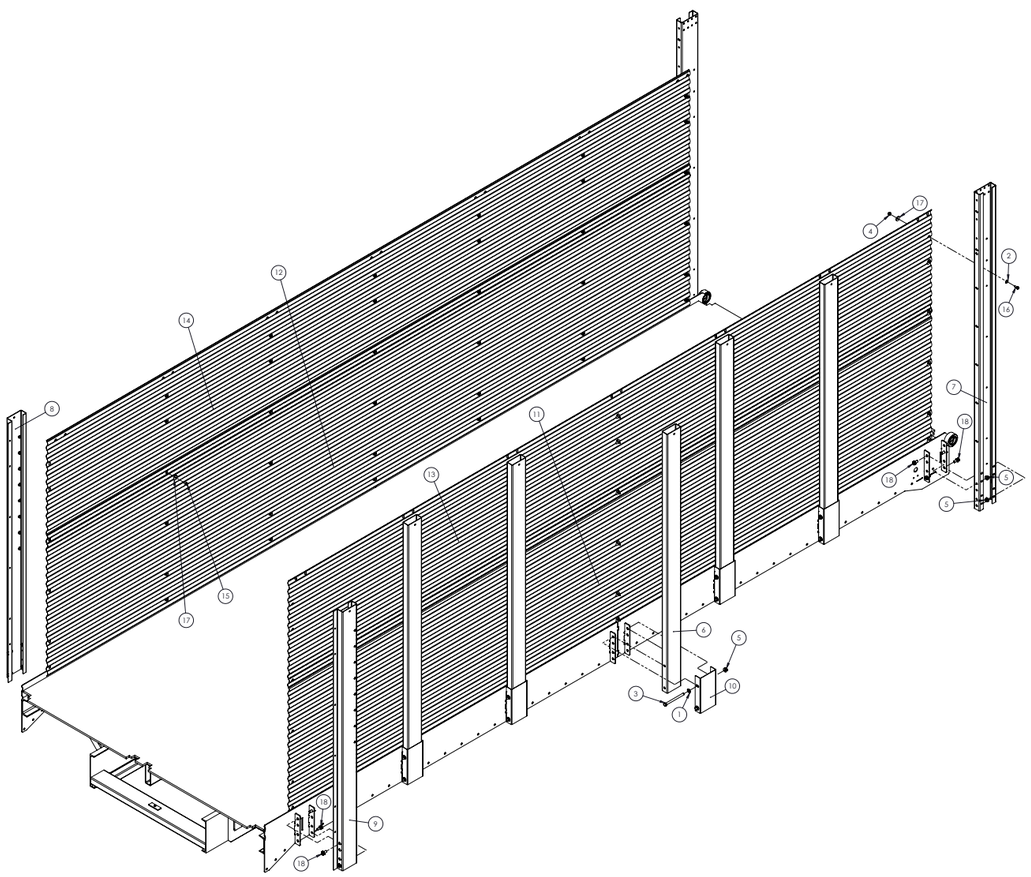

ITEM NO.	PART NUMBER	DESCRIPTION	QTY. (16')	QTY. (18')	QTY. (20')
1	005200	WASHER, FLAT 1/2 STD	12	16	20
2	022920	WASHER, FLAT 5/16 STD	12	12	12
3	1070015	BOLT, 1/2-13 X 6-1/2 GR5 ZN	12	16	20
4	600110	NUT, HFH NYLOC 5/16-18	12	12	12
5	600140	NUT, HFH NYLOC 1/2-13	18	20	26
6	710405	MIDDLE STAKE,	6	8	10
7	710406	REAR STAKE	2	2	2
8	710449	FRONT RIGHT STAKE WLDT	1	1	1
9	710459	FRONT LEFT STAKE WLDT	1	1	1
10	710469	STAKE CAP	6	8	10
11	710470	FB SIDE, LOWER LH 20'	-	-	1
	710485	FB SIDE, LOWER LH 18'	-	1	-
	710493	FB SIDE, LOWER LH 16'	1	-	-
12	710471	FB SIDE, LOWER RH 20'	-	-	1
	710486	FB SIDE, LOWER RH 18'	-	1	-
	710494	FB SIDE, LOWER RH 16'	1	-	-
13	710472	FB SIDE, UPPER LH 20'	-	-	1
	710487	FB SIDE, UPPER LH 18'	-	1	-
	710495	FB SIDE, UPPER LH 16'	1	-	-
14	710473	FB SIDE, UPPER RH 20'	-	-	1
	710488	FB SIDE, UPPER RH 18'	-	1	-
	710496	FB SIDE, UPPER RH 16'	1	-	-
15	MP09.71121	HHDBLT - G5 5/16 X 1	36	48	60
16	MP09.71122	HHDBLT - 5/16-18 X 1-1/4	12	12	12
17	MP300439B1	WASHER, FENDER 5/16	48	60	72
18	MP903952	HHDBLT - 1/2-13 X 1 WHZ	14	14	14
20' BOX SHOWN					

REAR DRIVE ASSEMBLY (COMBO/REAR UNLOAD)

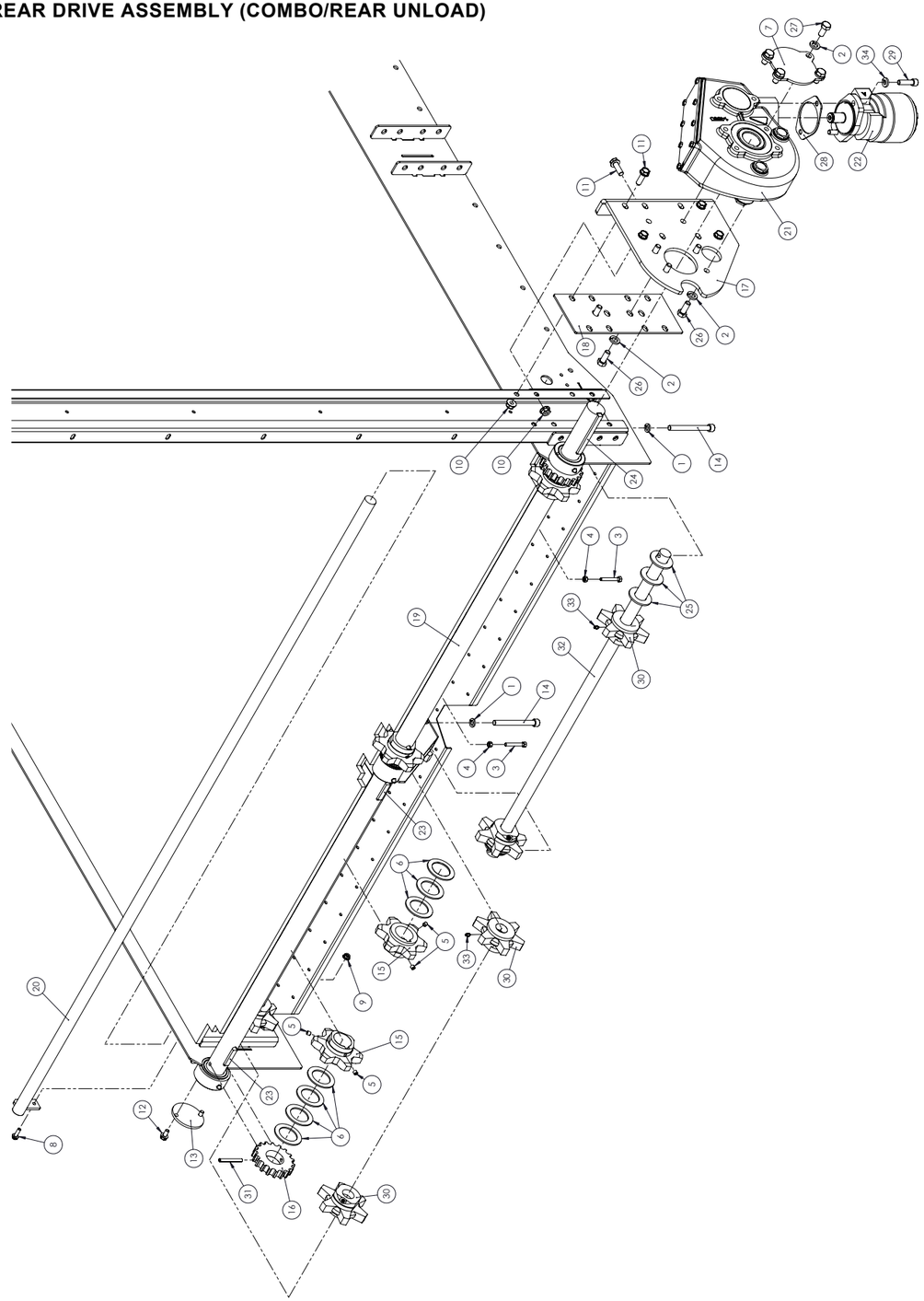

ITEM NO.	PART NUMBER	DESCRIPTION	QTY.
1	005370	WASHER, LOCK 1/2	4
2	020440	WASHER, LOCK 5/8	10
3	022910	HBOLT 0.3125-18X2.25--GR5-ZN	4
4	023630	NUT, HEX 5/16-18	4
5	218660	SCREW, HSSS 3/8-16 X 3/8	8
6	396120	BUSHING, MACH	14
7	598420	END PLATE, GEARBOX	1
8	600060	BOLT, HFH 5/16-18 X 1"	1
9	600110	NUT, HFH NYLOC 5/16-18	1
10	600140	NUT, HFH NYLOC 1/2-13	6
11	600580	BOLT, HFH 1/2-13 X 1-1/2"	6
12	600650	BOLT, HFH 3/8-16	2
13	690665	END CAP, APRON DRIVE	1
14	710075	BOLT, SHCS 1/2-13 X 5" GR 8	4
15	710416	APRON CHAIN SPROCKET	4
16	710427	DOOR LATCH GEAR	2
17	710428	REAR GEAR BOX PLATE	1
18	710429	REAR GEAR BOX SHIM	1
19	710432	REAR APRON DRIVE SHAFT	1
20	710433	IDLER SHAFT WLDT	1
21	710711	RT250 GEARBOX, BERMA	1
22	710720	MOTOR, HYD C-CONV & FR/RE APRON	1
23	710803	KEY, SQ. 1/2" X 2-3/16"	4
24	710804	KEY, SQ 1/2" X 5-7/16"	1
25	E829022	WASHER, FLAT 1-1/4" SAE	12
26	H3549	BOLT, HHCS M14-2 X 35 GR8.8 ZN	6
27	H4138	BOLT, HHCS M14-2 X 30 GR8.8 ZN	4
28	H610132	MOTOR SHIM PLATE	1
29	HZ86-11-1245	SHCS, M12-1.75 X 45	2
30	MP01.60120.5	SPROCKET - 667H 6T	8
31	MP01.74255	PIN, .375 X 3-1/2 SLT SPRING	2
32	MP16.20084.5	SHAFT, APRON IDLER	2
33	MP905081	FITTING, 1/4-28 STR ZN	8
34	MP907700	WASHER, LOCK M12	2

REAR DRIVE ASSEMBLY (FRONT UNLOAD)

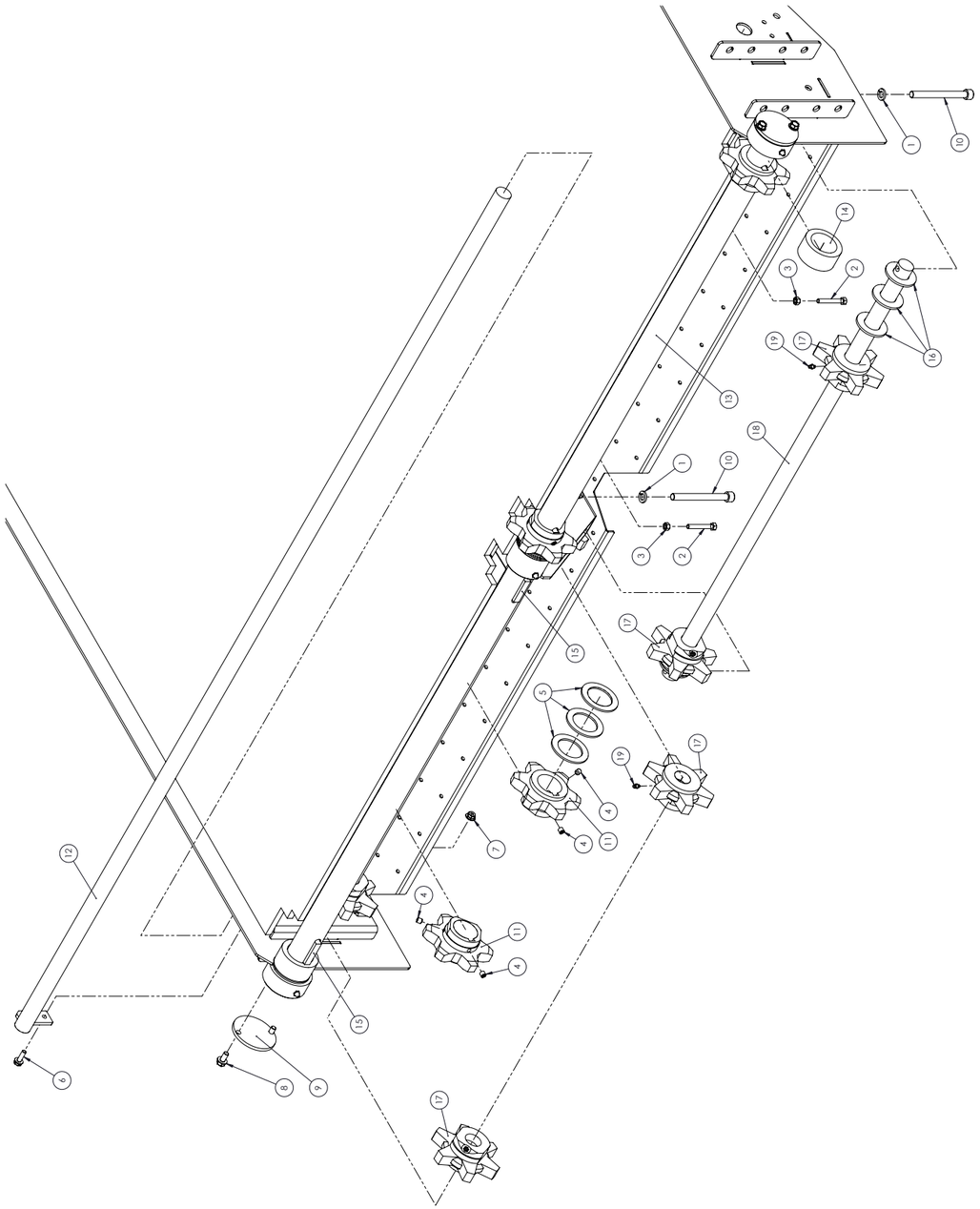

ITEM NO.	PART NUMBER	DESCRIPTION	QTY.
1	005370	WASHER, LOCK 1/2	4
2	022910	HBOLT 0.3125-18X2.25--GR5-ZN	4
3	023630	NUT, HEX 5/16-18	4
4	218660	SCREW, HSSS 3/8-16 X 3/8	8
5	396120	BUSHING, MACH	6
6	600060	BOLT, HFH 5/16-18 X 1"	1
7	600110	NUT, HFH NYLOC 5/16-18	1
8	600650	BOLT, HFH 3/8-16	4
9	690665	END CAP, APRON DRIVE	2
10	710075	BOLT, SHCS 1/2-13 X 5" GR 8	4
11	710416	APRON CHAIN SPROCKET	4
12	710433	IDLER SHAFT WLDT	1
13	710479	REAR APRON "DRIVE" SHAFT	1
14	710483	SPACER, REAR "DRIVE"	2
15	710803	KEY, SQ. 1/2" X 2-3/16"	4
16	E829022	WASHER, FLAT 1-1/4" SAE	12
17	MP01.60120.5	SPROCKET - 667H 6T	8
18	MP16.20084.5	SHAFT, APRON IDLER	2
19	MP905081	FITTING, 1/4-28 STR ZN	8

FRONT SHELL ASSEMBLY (COMBO/FRONT UNLOAD)

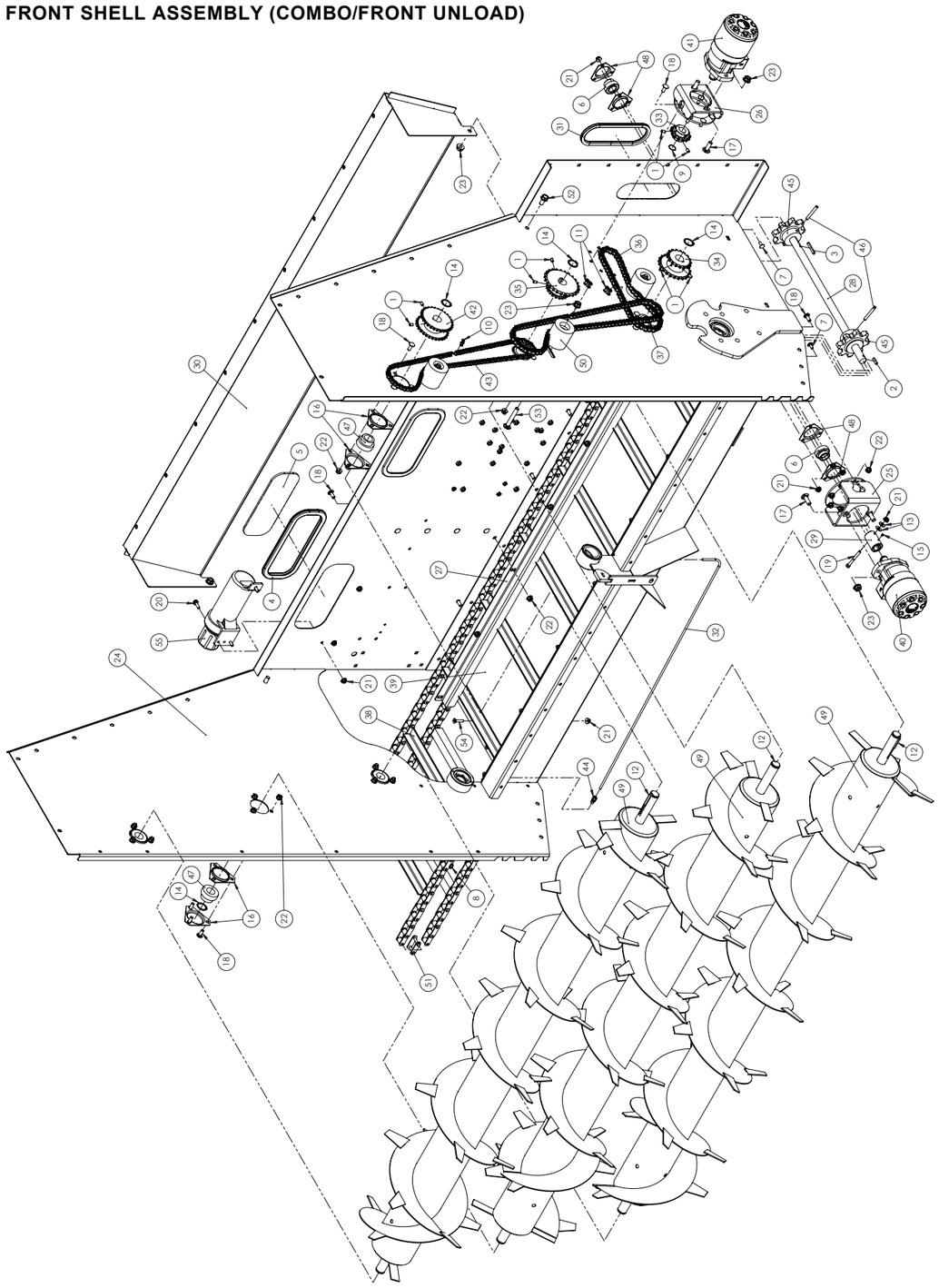

ITEM NO.	PART NUMBER	DESCRIPTION	QTY.
1	010990	SCREW, HSSS 5/16-18 X 5/16	10
2	011505	KEY, SQUARE 1/4" X 1"	1
3	011515	KEY, SQUARE 1/4" X 2"	2
4	012020	RUBBER, WINDOW	3
5	012050	GLASS, 4.5 X 12.0	3
6	012310	BEARING ADAP.,	2
7	012410	BOLT, CRG 5/16-18X3/4	6
8	013170	FITTING, GREASE STRAIGHT	1
9	013250	RING, RETAINING	1
10	013290	CONNECTING LINK, #40	1
11	013760	CONNECTING LINK, #50	2
12	020230	KEY, SQUARE 5/16 X 1-7/8	3
13	022920	WASHER, FLAT 5/16 STD	2
14	025710	RING, SNAP	6
15	120975	SET SCREW, 1/4"-20 X 1/4"	3
16	132090	FLANGETTE	12
17	156850	BOLT, CRG 1/2-13 X 1-1/2"	4
18	170530	BOLT, CRG 3/8-16 X 1"	49
19	257480	BOLT, HHCS 5/16-18 X 2 3/4 GR5 ZN	1
20	600060	BOLT, HFH 5/16-18 X 1"	3
21	600110	NUT, HFH NYLOC 5/16-18	20
22	600120	NUT, HFH NYLOC 3/8-16	48
23	600140	NUT, HFH NYLOC 1/2-13	9
24	710500	FRONT SHELL WLDT	1
25	710509	MOTOR MOUNT RING WLDT	1
26	710510	MOTOR MOUNT RING WLDT 2	1
27	710534	CONVEYOR CHAIN GUARD	2
28	710535	CONVEYOR DRIVE SHAFT	1
29	710536	CONVEYOR COUPLER	1

FRONT SHELL ASSEMBLY (COMBO/FRONT UNLOAD) (CONTINUED)

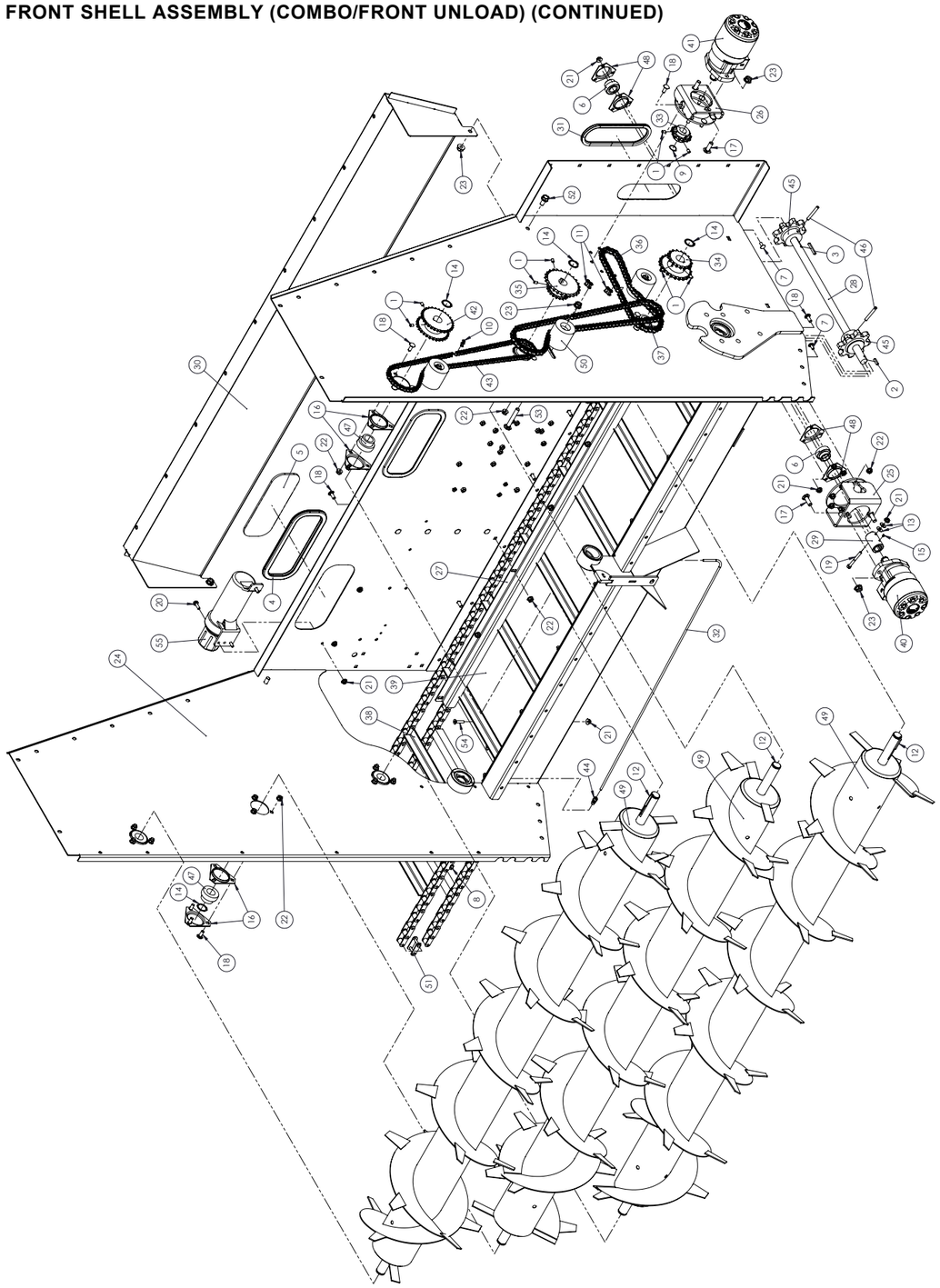

ITEM NO.	PART NUMBER	DESCRIPTION	QTY.
30	710550	SAFETY BAR	1
31	710585	SEAL, PORT	1
32	710595	GREASE LINE, FRONT SHELL	1
33	710650	SPROCKET, BEATER MOTOR	1
34	710651	SPROCKET, 1ST BEATER	1
35	710652	SPROCKET, 2ND BEATER	1
36	710660	CHAIN ROLLER, #50	1
37	710661	CHAIN ROLLER, #50	1
38	710700	CROSS CONVEYOR	1
-	MP01.75810	SERVICE SLAT WITH WELDED LINKS	-
-	MP01.11750	SERVICE SLAT (WELD IN)	-
39	710708	CONVEYOR FLOOR	1
40	710720	MOTOR, HYD C-CONV & FR/RE APRON	1
41	710730	MOTOR, HYD BEATERS	1
42	710734	SPROCKET, 3RD BEATER	1
43	710872	CHAIN ROLLER, #40	1
44	HT78-47-0204	STRAIGHT, BRASS, 1/8 M	1
45	MP01.60160.7	SPROCKET, DRIVE	2
46	MP01.74170	PIN, SPIROL 5/16 X 2-1/2	2
47	MP01.77560	BEARING - SPHERICAL 1.2	6
48	MP14.77107	FLANGETTE	4
49	MP16.20034.7	BEATER WLDT,	3
50	MP26.00021	TENSIONER - 3 X 3.125 UHMW	3
51	MP900703	LINK, CONNECTING	2
-	MP900709	LINK, OFFSET	-
52	MP903952	HHDBLT - 1/2-13 X 1 WHZ	2
53	MP907054	BOLT, CRG 1/2-13 X 3-1/2 GR5 ZN	3
54	MP907624	SCREW - FHSCS 5/16-18 X	10
55	MP907739	TUBE - OP MAN HOLDER	1

FRONT SHELL ASSEMBLY (REAR UNLOAD)

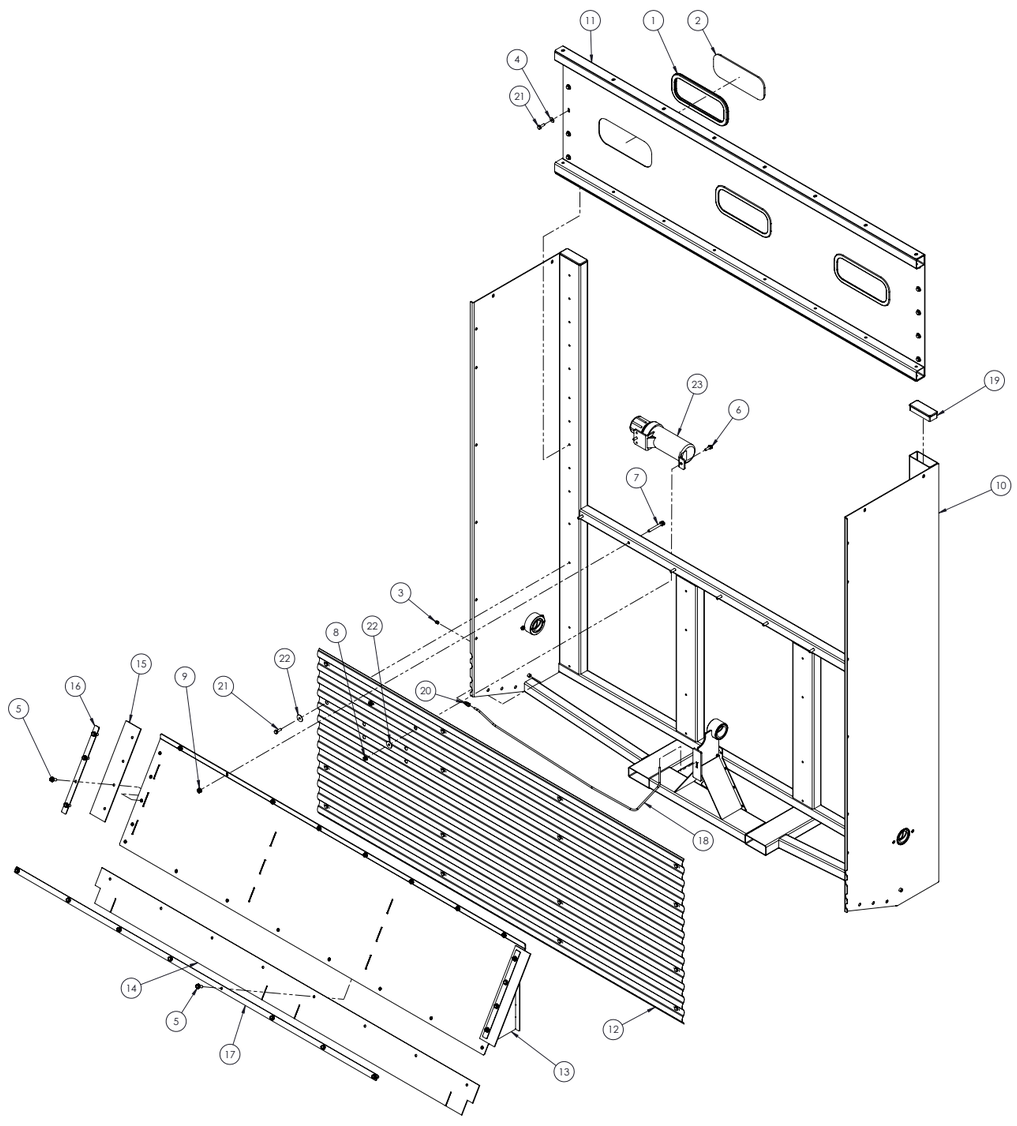

ITEM NO.	PART NUMBER	DESCRIPTION	QTY.
1	012020	RUBBER, WINDOW	3
2	012050	GLASS, 4.5 X 12.0	3
3	013170	FITTING, GREASE STRAIGHT	1
4	022920	WASHER, FLAT 5/16 STD	10
5	600050	BOLT, HFH 3/8-16 X 1.00"	16
6	600060	BOLT, HFH 5/16-18 X 1"	2
7	600080	BOLT, HFH 3/8-16	8
8	600110	NUT, HFH NYLOC 5/16-18	2
9	600120	NUT, HFH NYLOC 3/8-16	8
10	710010	FRONT SHELL, REAR UNLOAD	1
11	710020	PANEL, WINDOWED, WDLT	1
12	710025	PANEL, CORRUGATED	1
13	710030	BAFFLE WLDT	1
14	710035	BAFFLE, CHAIN SEAL	1
15	710036	BAFFLE, SIDE SEAL	2
16	710037	RETAINER, SIDE SEAL	2
17	710038	RETAINER, CHAIN SEAL	1
18	710045	GREASE LINE, RU-FS	1
19	710850	PLUG, 2"X5"X11GA TUBE	4
20	HT78-47-0204	STRAIGHT, BRASS, 1/8 M	1
21	MP09.71122	HHDBLT - 5/16-18 X 1-1/4	26
22	MP300439B1	WASHER, FENDER 5/16	18
23	MP907739	TUBE - OP MAN HOLDER	1

FRONT DRIVE ASSEMBLY (COMBO/FRONT UNLOAD)

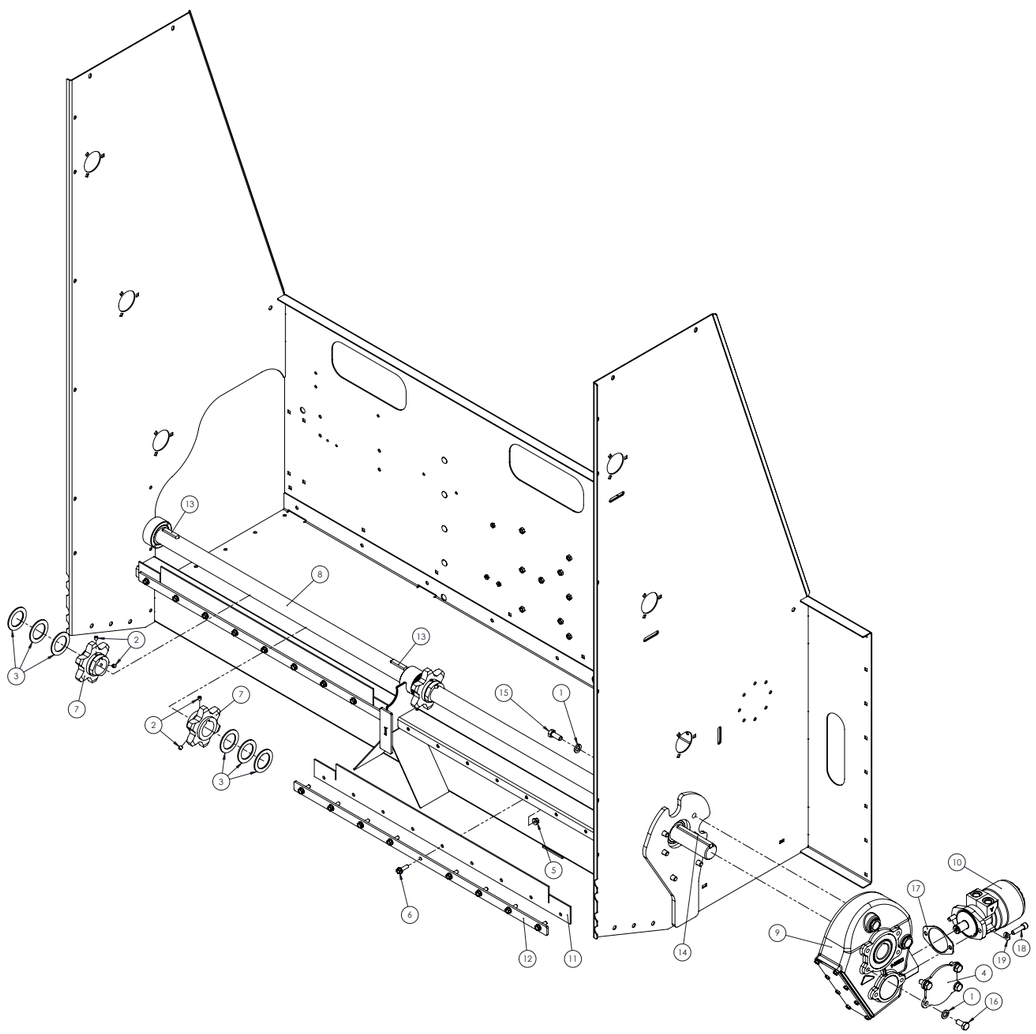

ITEM NO.	PART NUMBER	DESCRIPTION	QTY.
1	020440	WASHER, LOCK 5/8	10
2	218660	SCREW, HSSS 3/8-16 X 3/8	8
3	396120	BUSHING, MACH	14
4	598420	END PLATE, GEARBOX	1
5	600120	NUT, HFH NYLOC 3/8-16	18
6	600280	BOLT, HFH 3/8-16 X 1-1/4"	18
7	710416	APRON CHAIN SPROCKET	4
8	710431	FRONT APRON DRIVE SHAFT	1
9	710711	RT250 GEARBOX, BERMA	1
10	710720	MOTOR, HYD C-CONV & FR/RE APRON	1
11	710740	SEAL, CHAIN RETURN	2
12	710741	RUBBER FLAP RETAINER	2
13	710803	KEY, SQ. 1/2" X 2-3/16"	4
14	710804	KEY, SQ 1/2" X 5-7/16"	1
15	H3549	BOLT, HHCS M14-2 X 35 GR8.8 ZN	6
16	H4138	BOLT, HHCS M14-2 X 30 GR8.8 ZN	4
17	H610132	MOTOR SHIM PLATE	1
18	HZ86-11-1245	SHCS, M12-1.75 X 45	2
19	MP907700	WASHER, LOCK M12	2

FRONT DRIVE ASSEMBLY (REAR UNLOAD)

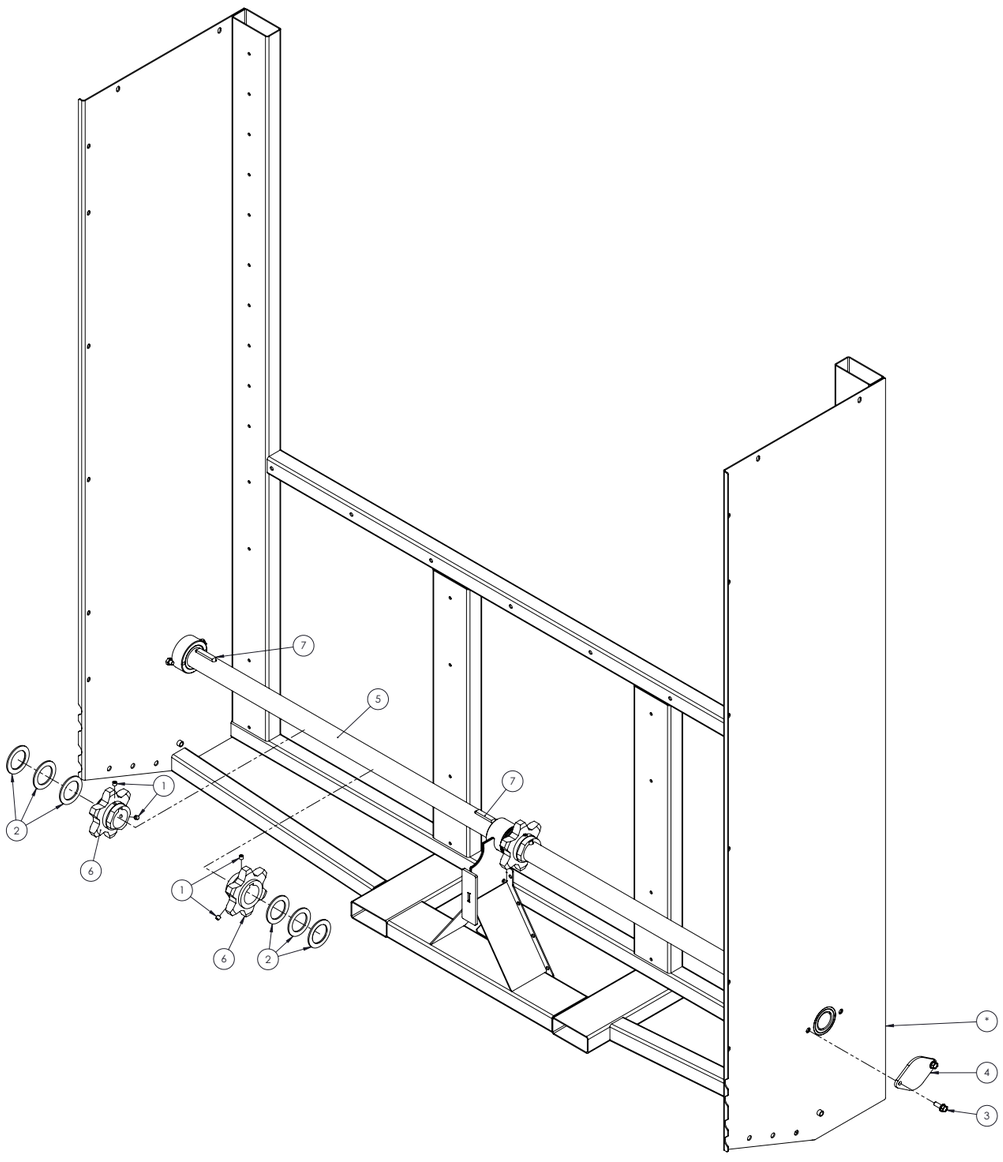

ITEM NO.	PART NUMBER	DESCRIPTION	QTY.
1	218660	SCREW, HSSS 3/8-16 X 3/8	8
2	396120	BUSHING, MACH	14
3	600050	BOLT, HFH 3/8-16 X 1.00"	4
4	710040	CAP, FRONT SHAFT	2
5	710050	FRONT APRON DRIVE SHAFT	1
6	710416	APRON CHAIN SPROCKET	4
7	710803	KEY, SQ. 1/2" X 2-3/16"	4

SHELL-FRAME ASSEMBLY (COMBO/FRONT UNLOAD)

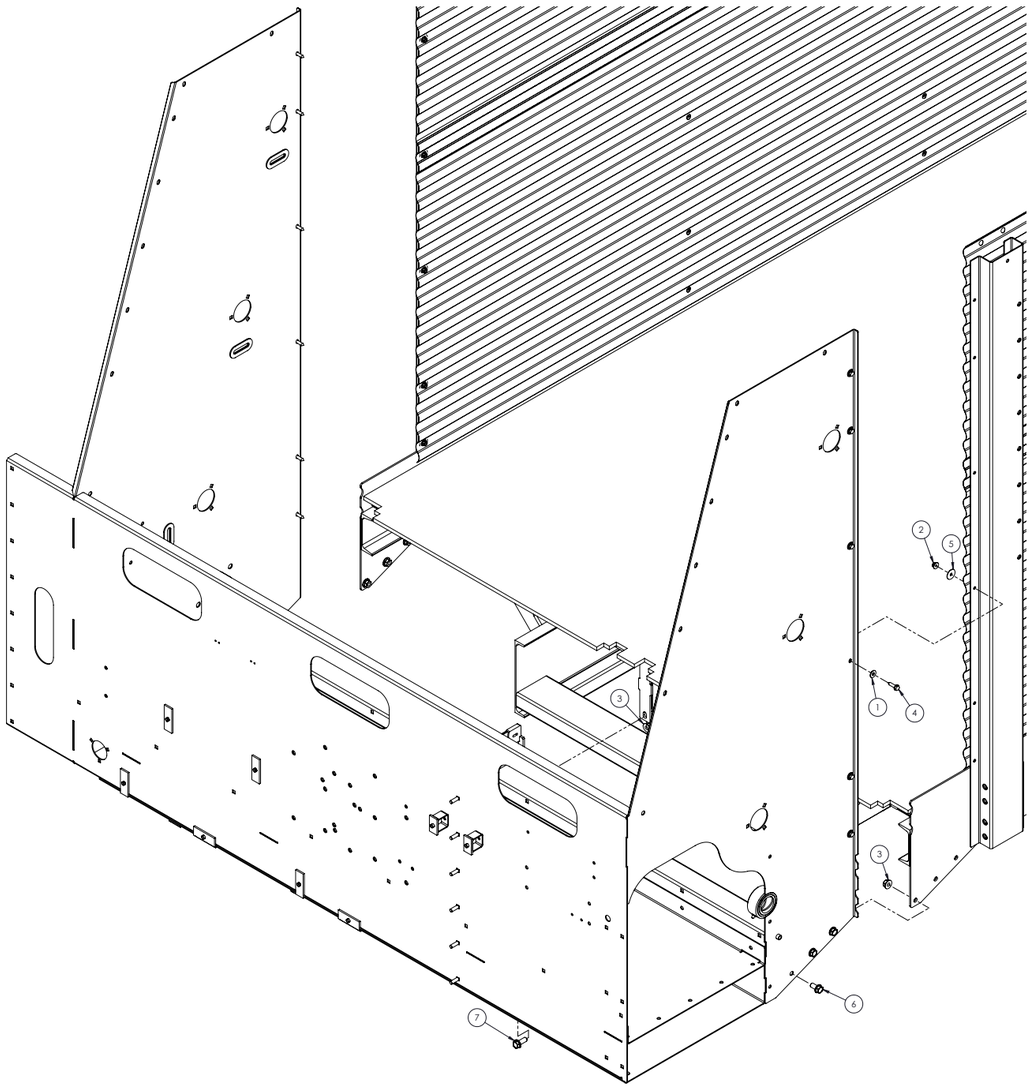

ITEM NO.	PART NUMBER	DESCRIPTION	QTY.
1	022920	WASHER, FLAT 5/16 STD	12
2	600110	NUT, HFH NYLOC 5/16-18	12
3	600140	NUT, HFH NYLOC 1/2-13	7
4	MP09.71122	HHDBLT - 5/16-18 X 1-1/4	12
5	MP300439B1	WASHER, FENDER 5/16	12
6	MP903952	HHDBLT - 1/2-13 X 1" WHZ	6
7	MP904557	HHDBLT - 1/2-13 X 1-1/4" WHZ	1

SHELL-FRAME ASSEMBLY (REAR UNLOAD)

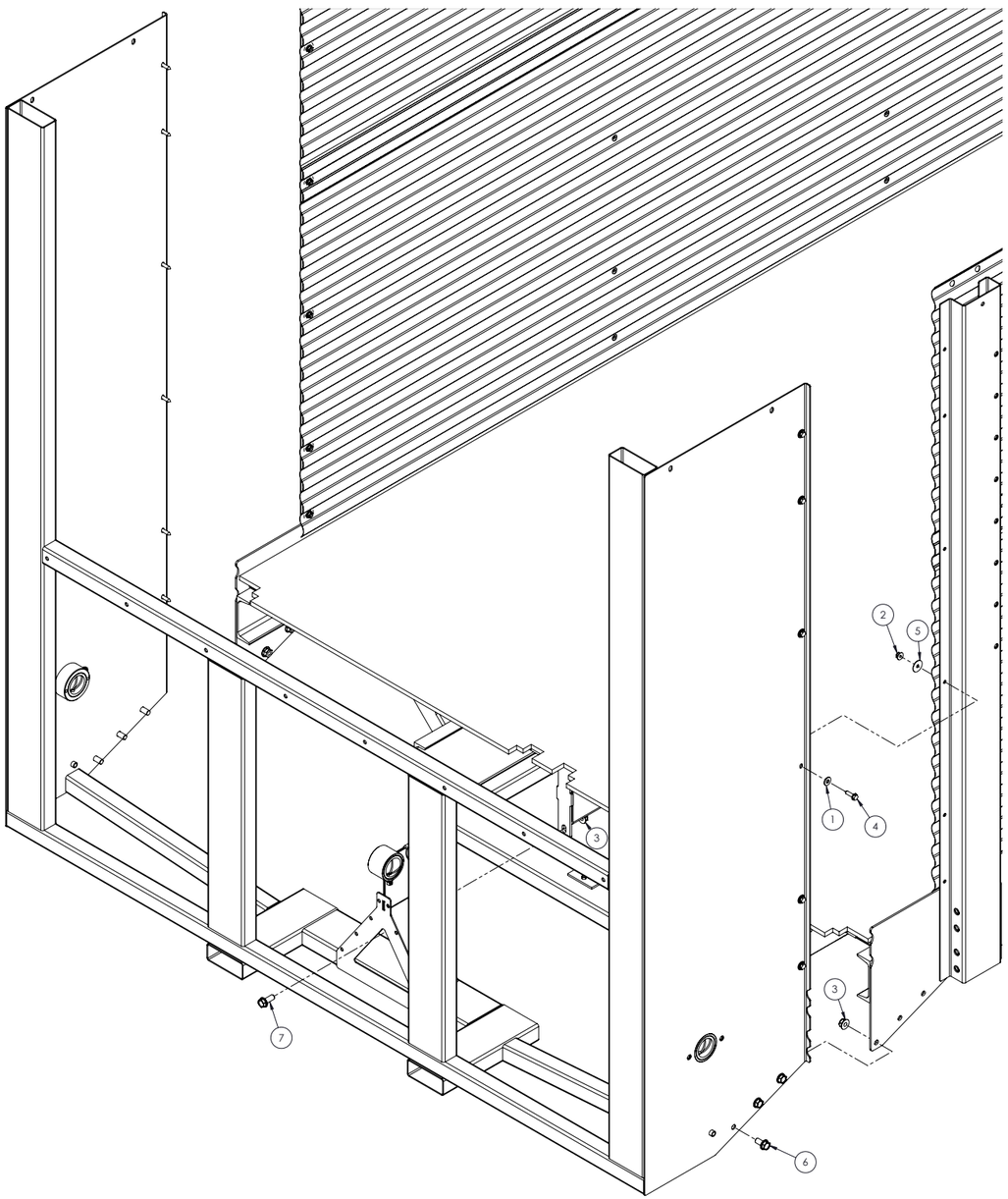

ITEM NO.	PART NUMBER	DESCRIPTION	QTY.
1	022920	WASHER, FLAT 5/16 STD	12
2	600110	NUT, HFH NYLOC 5/16-18	12
3	600140	NUT, HFH NYLOC 1/2-13	7
4	MP09.71122	HHDBLT - 5/16-18 X 1-1/4	12
5	MP300439B1	WASHER, FENDER 5/16	12
6	MP903952	HHDBLT - 1/2-13 X 1 WHZ	6
7	MP904557	HHDBLT - 1/2-13 X 1-1/4" WHZ	1

SILLS-RAFTERS ASSEMBLY

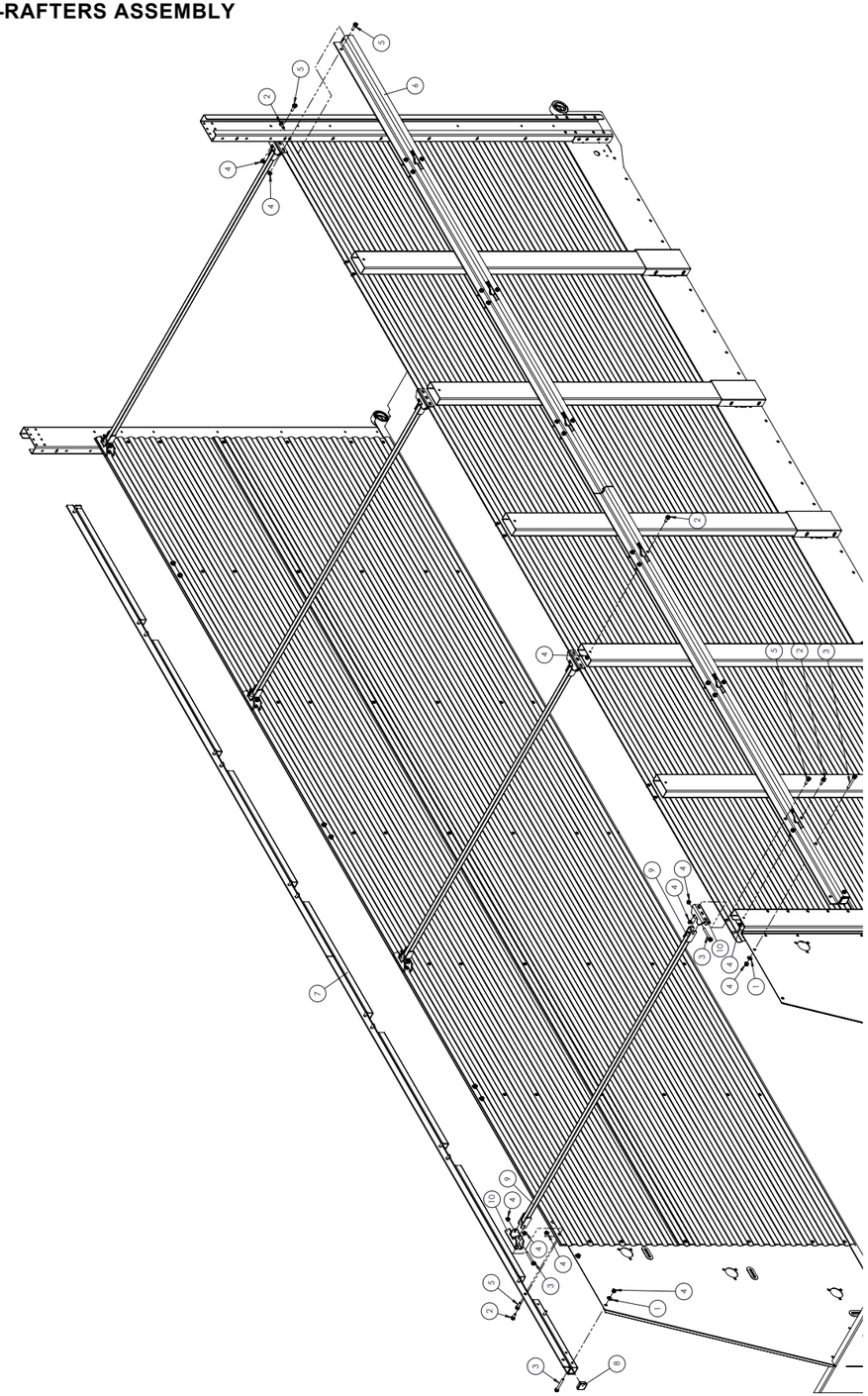

ITEM NO.	PART NUMBER	DESCRIPTION	QTY. (16')	QTY. (18')	QTY. (20')
1	021190	WASHER, FLAT 3/8 STD	12	12	16
2	600050	BOLT, HFH 3/8-16 X 1.00"	10	12	14
3	600080	BOLT, HFH 3/8-16	10	12	12
4	600120	NUT, HFH NYLOC 3/8-16	38	46	52
5	600280	BOLT, HFH 3/8-16 X 1-1/4"	20	24	28
6	710408	SILL WELDMENT LEFT 20'	-	-	1
	710435	SILL WELDMENT LEFT 18'	-	1	-
	710446	SILL WELDMENT LEFT 16'	1	-	-
7	710413	SILL WELDMENT RIGHT 20'	-	-	1
	710438	SILL WELDMENT RIGHT 18'	-	1	-
	710456	SILL WELDMENT RIGHT 16'	1	-	-
8	710855	PLUG, 1-3/4"X1-3/4"X11GA	2	2	2
9	MP16.20824.7	RAFTER - (2002)	3	4	4
10	MP16.20827.7	MOUNT - RAFTER 2002	6	8	8
20' BOX SHOWN					

APRON CHAINS ASSEMBLY

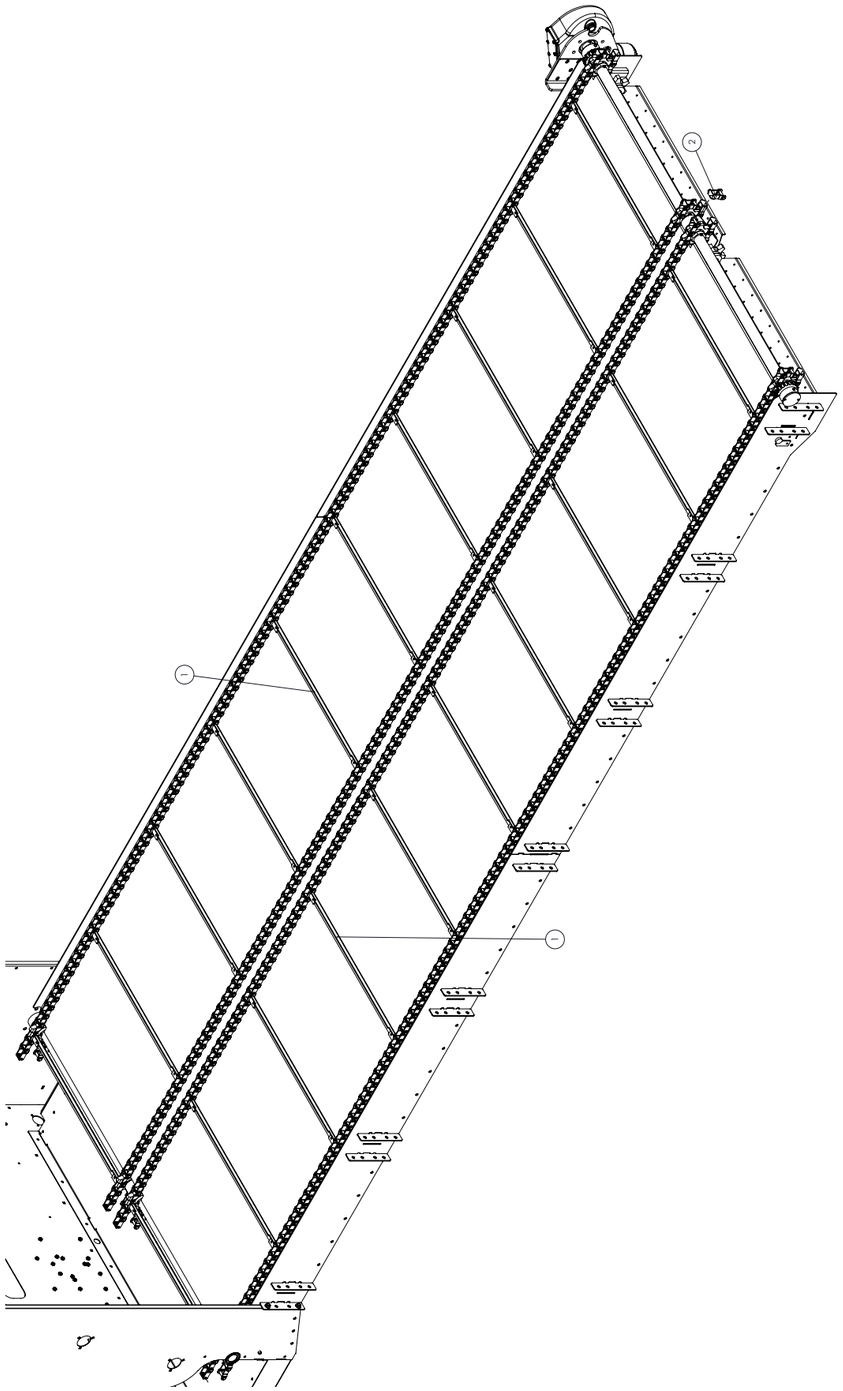

ITEM NO.	PART NUMBER	DESCRIPTION	QTY. (16')	QTY. (18')	QTY. (20')
1	MP16.20803	667X APRON CHAIN	-	-	2
	MP16.20413		-	2	-
	MP16.20411		2	-	-
2	MP61.79340	CONNECTING LINK, 667X	4		
-	MP61.79125	SERVICE SLAT WITH RIVETED LINKS	-		
-	MP61.79130	SERVICE SLAT, RIVET READY	-		
-	MP61.79170	RIVET, 5/16" X 13/16"	-		
-	MP905426	TABBED CONNECTING LINK, 667X	-		
20' BOX SHOWN					

REAR DOOR ASSEMBLY (COMBO/REAR UNLOAD)

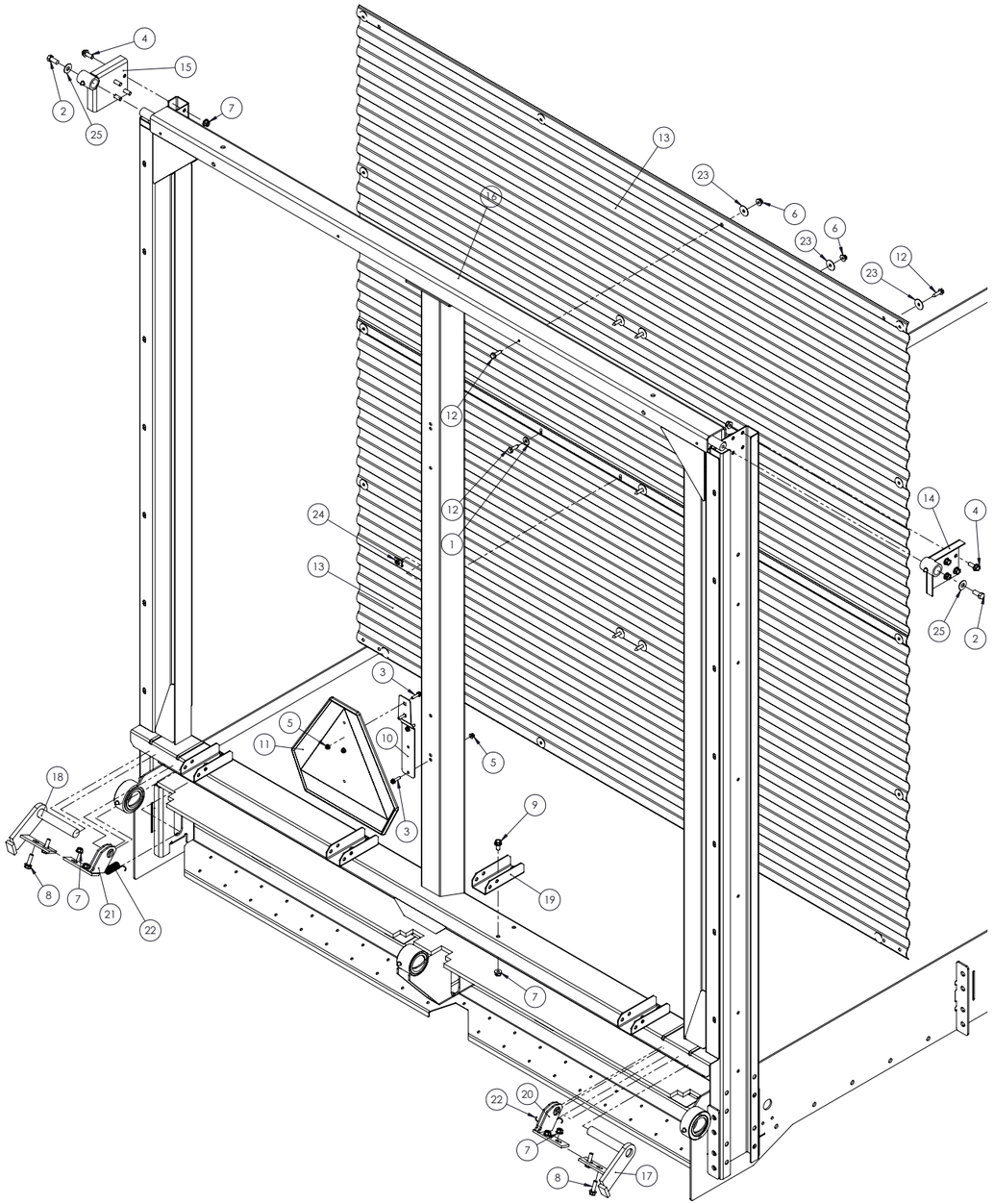

ITEM NO.	PART NUMBER	DESCRIPTION	QTY.
1	022920	WASHER, FLAT 5/16 STD	2
2	128000	BOLT, HHCS 7/16-14 X 1	2
3	600020	BOLT, HFH 1/4-20 X 1.00"	4
4	600050	BOLT, HFH 3/8-16 X 1.00"	8
5	600100	NUT, HFH NYLOC 1/4-20	4
6	600110	NUT, HFH NYLOC 5/16-18	16
7	600120	NUT, HFH NYLOC 3/8-16	20
8	600280	BOLT, HFH 3/8-16 X 1-1/4"	4
9	600650	BOLT, HFH 3/8-16	8
10	E104471	BRACKET	1
11	E224138	EMBLEM, CAUTION SMV	1
12	MP09.71122	HHDBLT - 5/16-18 X 1-1/4	22
13	MP16.10437	PANEL - REAR DOOR	2
14	MP16.20172.5	HINGE WELDMENT R/S	1
15	MP16.20173.5	HINGE WELDMENT L/S	1
16	MP16.20228.2	TAILGATE WELDMENT	1
17	MP16.20229.5	LATCH WELDMENT RH	1
18	MP16.20230.5	LATCH WELDMENT LH	1
19	MP16.20358.7	MOUNT, REAR DOOR	4
20	MP16.20359.5	STOP, LATCH RH	1
21	MP16.20360.5	STOP, LATCH LH	1
22	MP16.20390	SPRING - EXT .085 X .75	2
23	MP300439B1	WASHER, FENDER 5/16	22
24	MP900382	NUT - RETAINED 5/16 UNC	6
25	P99549	WASHER, FLAT 7/16 SA 15/	2

GATE DELAY ASSEMBLY (COMBO/REAR UNLOAD)

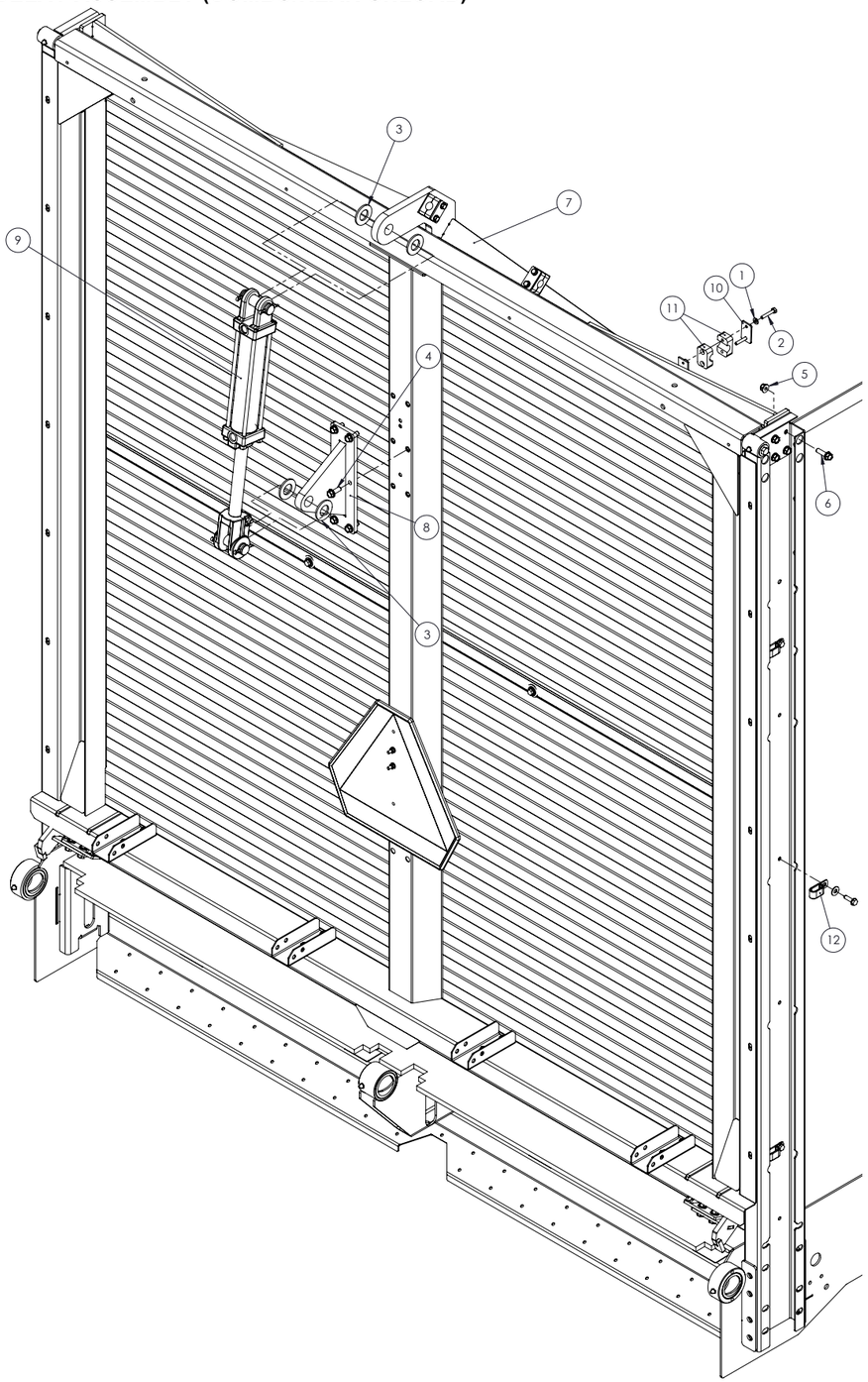

ITEM NO.	PART NUMBER	DESCRIPTION	QTY.
1	023620	WASHER, LOCK 5/16	6
2	047000	BOLT, HHCS 1/4-20 X 1-1/2	6
3	1107389	WASHER, FLAT 1 SAE	4
4	600050	BOLT, HFH 3/8-16 X 1.00"	6
5	600120	NUT, HFH NYLOC 3/8-16	8
6	600280	BOLT, HFH 3/8-16 X 1-1/4"	8
7	716000	MOUNT BEAM WLDT,	1
8	716010	MOUNT LUG WLDT,	1
9	716020	CYLINDER, 2" X 8" 3K PSI	1
10	HC14-00-3169	TOP CAP, HOSE CLAMP	3
11	HC14-00-3171	SECTION, HOSE CLAMP	6
12	MP05.73375	CLAMP - HOSE	3

REAR DOOR ASSEMBLY (FRONT UNLOAD)

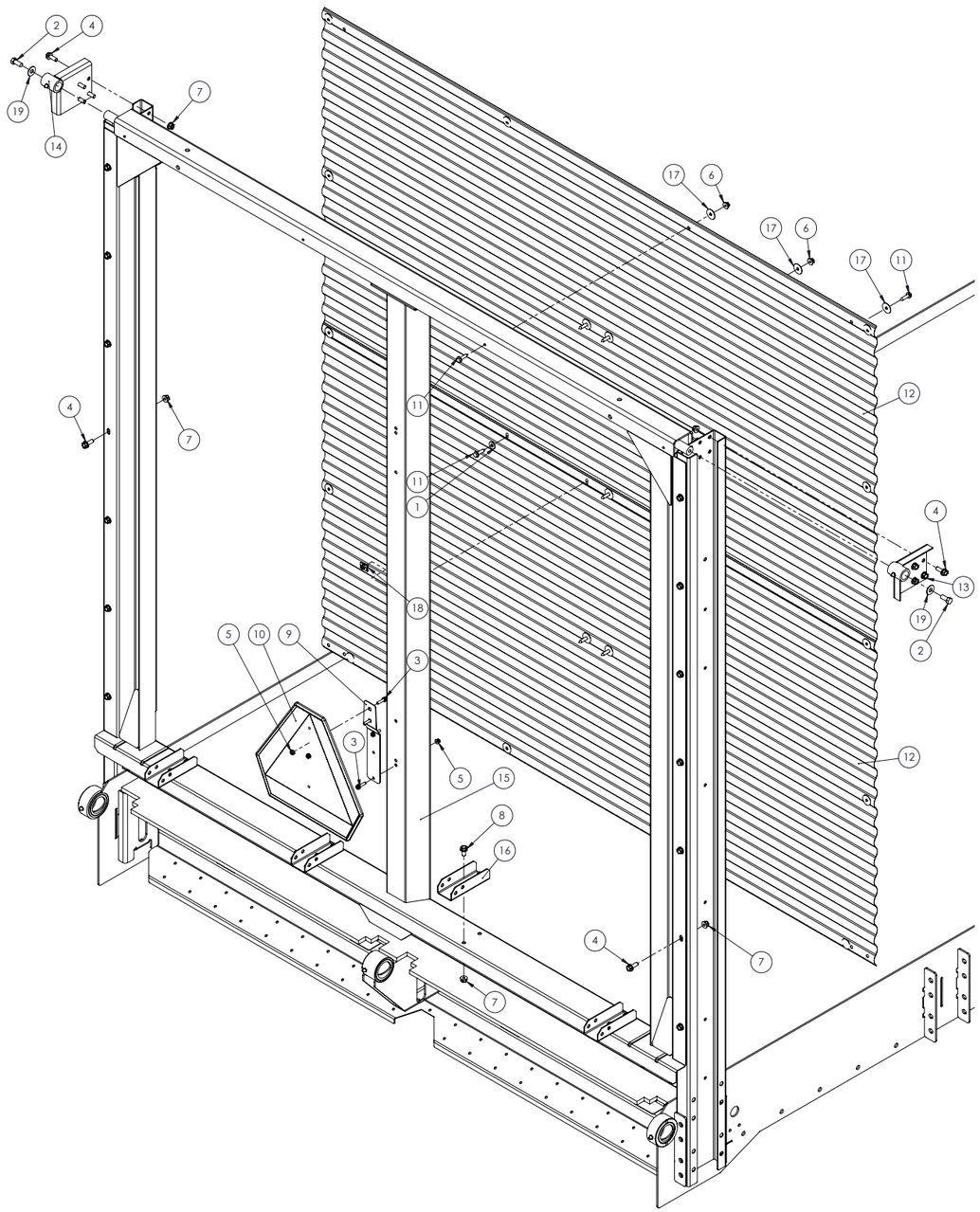

ITEM NO.	PART NUMBER	DESCRIPTION	QTY.
1	022920	WASHER, FLAT 5/16 STD	2
2	128000	BOLT, HHCS 7/16-14 X 1	2
3	600020	BOLT, HFH 1/4-20 X 1.00"	4
4	600050	BOLT, HFH 3/8-16 X 1.00"	22
5	600100	NUT, HFH NYLOC 1/4-20	4
6	600110	NUT, HFH NYLOC 5/16-18	16
7	600120	NUT, HFH NYLOC 3/8-16	30
8	600650	BOLT, HFH 3/8-16	8
9	E104471	BRACKET	1
10	E224138	EMBLEM, CAUTION SMV	1
11	MP09.71122	HHDBLT - 5/16-18 X 1-1/4	22
12	MP16.10437	PANEL - REAR DOOR	2
13	MP16.20172.5	HINGE WELDMENT R/S	1
14	MP16.20173.5	HINGE WELDMENT L/S	1
15	MP16.20228.2	TAILGATE WELDMENT	1
16	MP16.20358.7	MOUNT, REAR DOOR	4
17	MP300439B1	WASHER, FENDER 5/16	22
18	MP900382	NUT - RETAINED 5/16 UNC	6
19	P99549	WASHER, FLAT 7/16 SA 15/	2

SIDE EXTENSIONS ASSEMBLY (COMBO/FRONT UNLOAD)

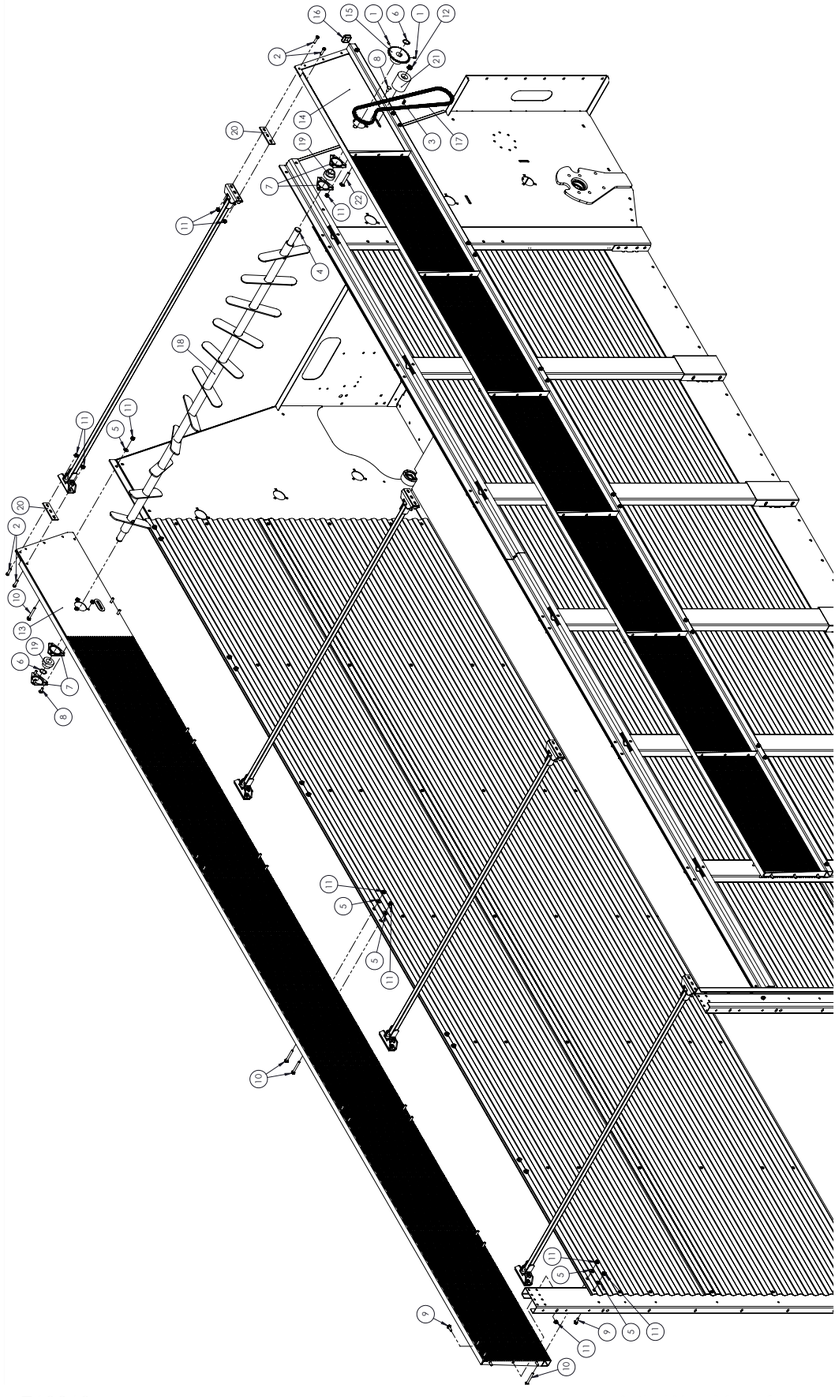

ITEM NO.	PART NUMBER	DESCRIPTION	QTY. (16')	QTY. (18')	QTY. (20')
1	010990	SCREW, HSSS 5/16-18 X 5/16	2	2	2
2	011370	BOLT, HHCS 3/8-16 X 1-1/2	12	16	16
3	013290	CONNECTING LINK, #40	1	1	1
4	020230	KEY, SQUARE 5/16 X 1-7/8	1	1	1
5	021190	WASHER, FLAT 3/8 STD	22	26	30
6	025710	RING, SNAP	2	2	2
7	132090	FLANGETTE	4	4	4
8	170530	BOLT, CRG 3/8-16 X 1"	6	6	6
9	600050	BOLT, HFH 3/8-16 X 1.00"	8	8	8
10	600080	BOLT, HFH 3/8-16	26	24	28
11	600120	NUT, HFH NYLOC 3/8-16	52	54	58
12	600140	NUT, HFH NYLOC 1/2-13	1	1	1
13	710420	SIDE EXTENSION LH 20'	-	-	1
	710441	SIDE EXTENSION LH 18'	-	1	-
	710463	SIDE EXTENSION LH 16'	1	-	-
14	710430	SIDE EXTENSION RH 20'	-	-	1
	710445	SIDE EXTENSION RH 18'	-	1	-
	710467	SIDE EXTENSION RH 16'	1	-	-
15	710735	SPROCKET, 4TH BEATER	1	1	1
16	710855	PLUG, 1-3/4"X1-3/4"X11GA	2	2	2
17	710873	CHAIN ROLLER, #40	1	1	1
18	710900	4TH BEATER WLDT	1	1	1
19	MP01.77560	BEARING - SPHERICAL 1.2	2	2	2
20	MP16.20830.7	SHIM - RAFTER MOUNT 1/4	6	8	8
21	MP26.00021	TENSIONER - 3 X 3.125 UHMW	1	1	1
22	MP907054	BOLT, CRG 1/2-13 X 3-1/2 GR5 ZN	1	1	1
20' BOX SHOWN					

SIDE EXTENSIONS ASSEMBLY (REAR UNLOAD)

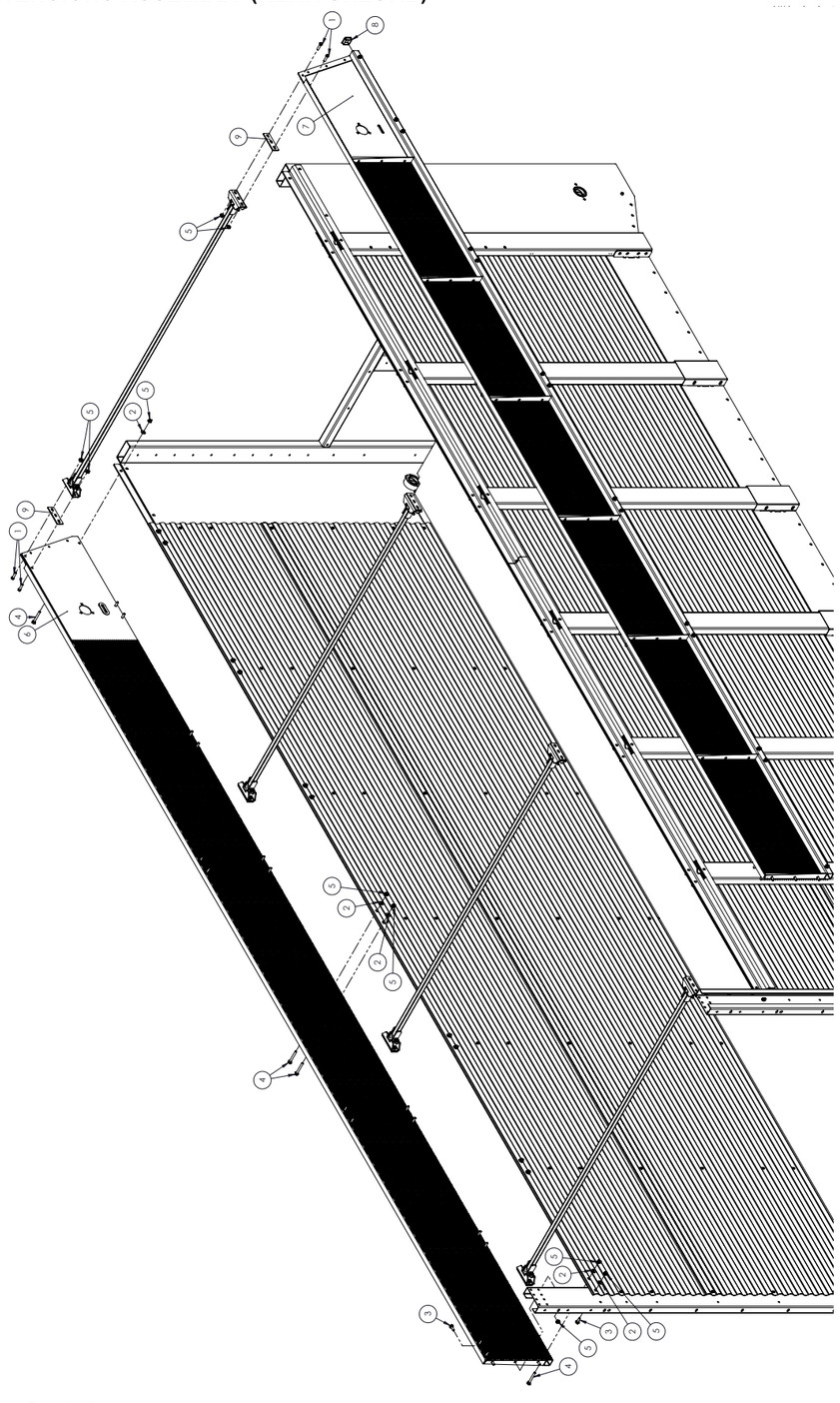

ITEM NO.	PART NUMBER	DESCRIPTION	QTY. (16')	QTY. (18')	QTY. (20')
1	011370	BOLT, HHCS 3/8-16 X 1-1/2	12	16	16
2	021190	WASHER, FLAT 3/8 STD	22	26	30
3	600050	BOLT, HFH 3/8-16 X 1.00"	8	8	8
4	600080	BOLT, HFH 3/8-16	26	24	28
5	600120	NUT, HFH NYLOC 3/8-16	52	54	52
6	710420	SIDE EXTENSION LH 20'	-	-	1
	710441	SIDE EXTENSION LH 18'	-	1	-
	710463	SIDE EXTENSION LH 16'	1	-	-
7	710430	SIDE EXTENSION RH 20'	-	-	1
	710445	SIDE EXTENSION RH 18'	-	1	-
	710467	SIDE EXTENSION RH 16'	1	-	-
8	710855	PLUG, 1-3/4"X1-3/4"X11GA	2	2	2
9	MP16.20830.7	SHIM - RAFTER MOUNT 1/4	6	8	8
20' BOX SHOWN					

ROOF ASSEMBLY

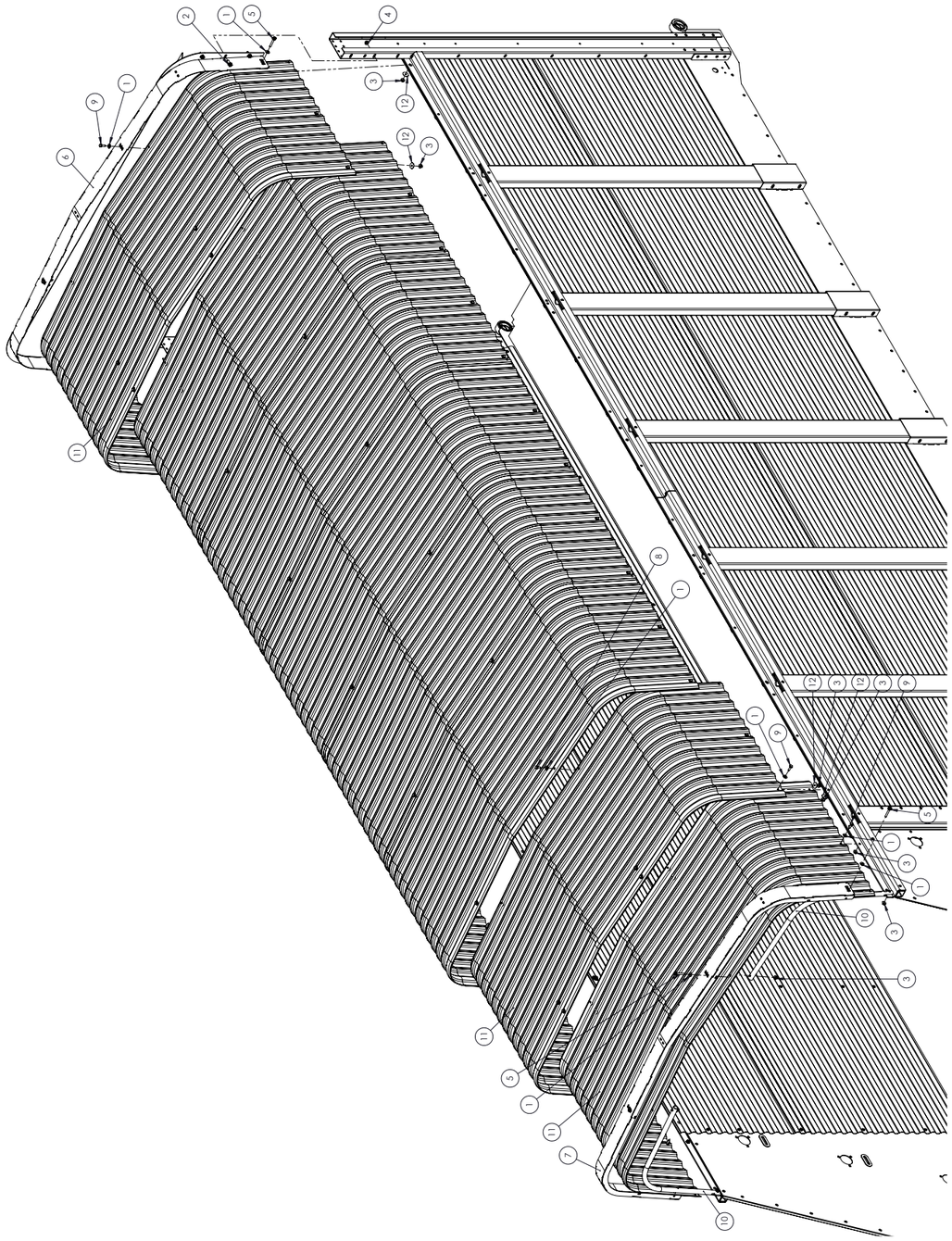

ITEM NO.	PART NUMBER	DESCRIPTION	QTY. (16')	QTY. (18')	QTY. (20')
1	022920	WASHER, FLAT 5/16 STD	56	48	56
2	600050	BOLT, HFH 3/8-16 X 1.00"	6	6	6
3	600110	NUT, HFH NYLOC 5/16-18	56	48	56
4	600120	NUT, HFH NYLOC 3/8-16	6	6	6
5	600270	BOLT, HFH 5/16-18	6	6	6
6	710080	REAR EDGE PROTECTOR ROOF	1	1	1
7	710085	FRONT EDGE PROTECTR ROOF	1	1	1
8	MP09.71121	HHDBLT - G5 5/16 X 1	18	14	18
9	MP09.71122	HHDBLT - 5/16-18 X 1-1/4	32	28	32
10	MP16.20680.7	REINFORCING TUBE,	2	2	2
11	MP16.20779	ROOF SECTION,	8	7	8
12	MP300439B1	WASHER, FENDER 5/16	50	42	50
20' BOX SHOWN					

WIND SCREEN (COMBO/FRONT UNLOAD)

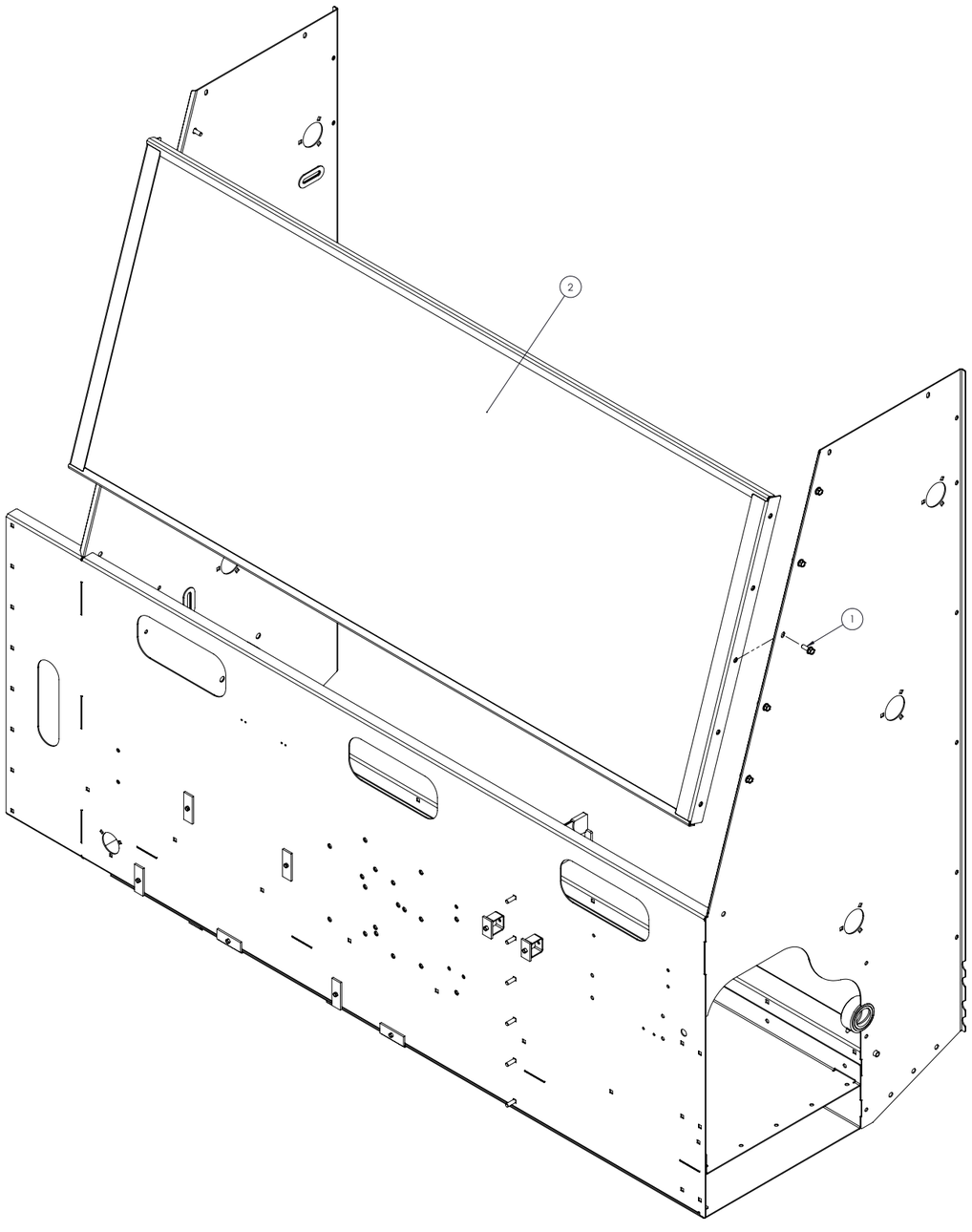

ITEM NO.	PART NUMBER	DESCRIPTION	QTY.
1	600050	BOLT, HFH 3/8-16 X 1.00"	10
2	710070	FRONT UNLOAD WIND SCREEN	1

SHELL FILLER ASSEMBLY (REAR UNLOAD)

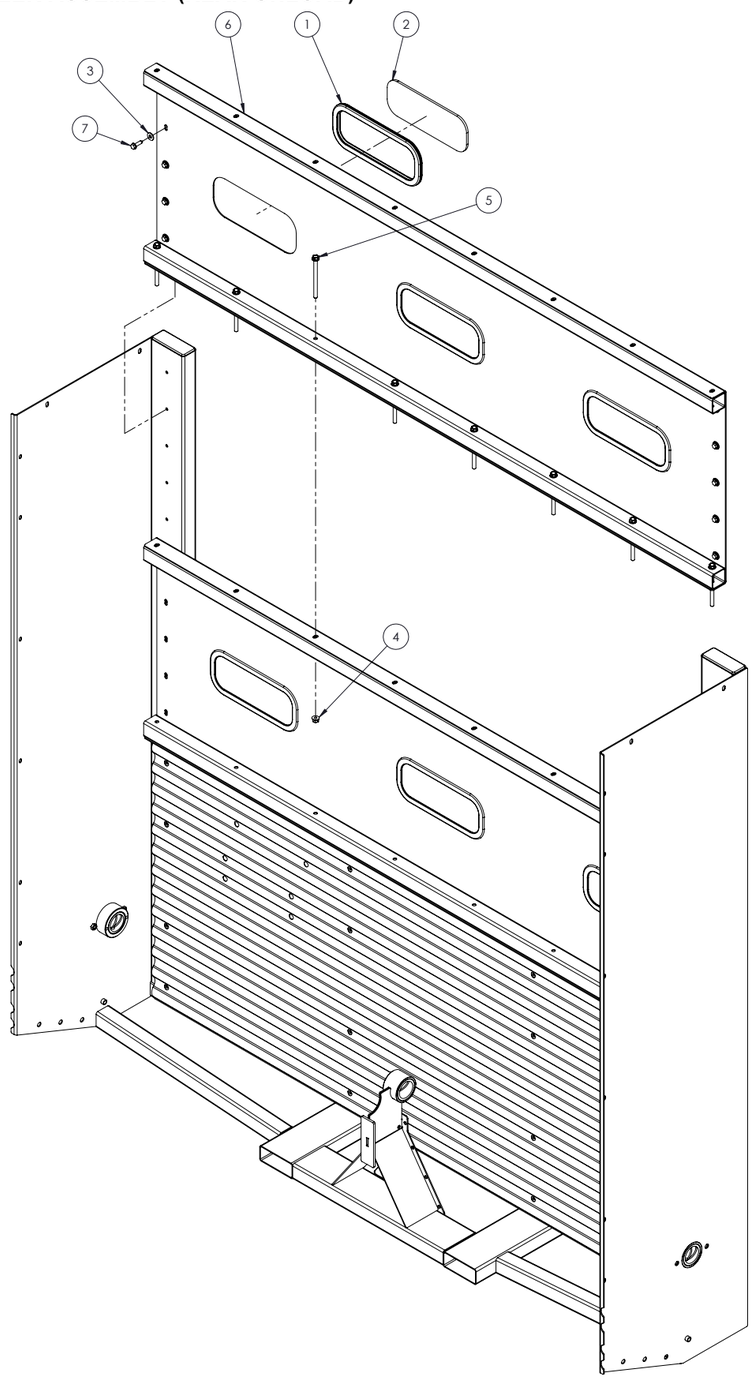

ITEM NO.	PART NUMBER	DESCRIPTION	QTY.
1	012020	RUBBER, WINDOW	3
2	012050	GLASS, 4.5 X 12.0	3
3	022920	WASHER, FLAT 5/16 STD	10
4	600120	NUT, HFH NYLOC 3/8-16	8
5	600675	BOLT, HFH 3/8-16 X 4.00"	8
6	710020	PANEL, WINDOWED, WDLT	1
7	MP09.71122	HHDBLT - 5/16-18 X 1-1/4	10

EXTENSION FILLER ASSEMBLY (REAR UNLOAD)

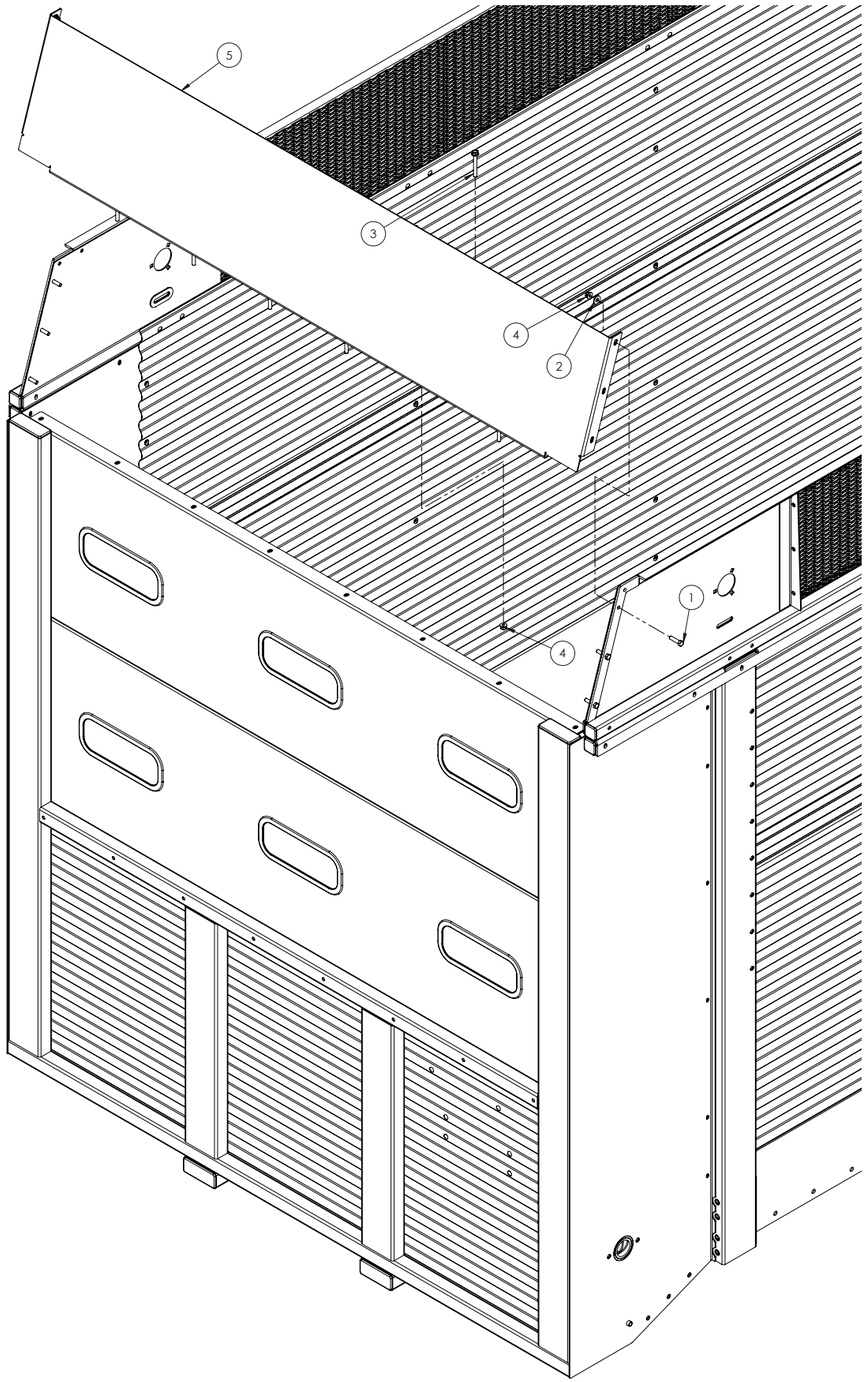

ITEM NO.	PART NUMBER	DESCRIPTION	QTY.
1	011370	BOLT, HHCS 3/8-16 X 1-1/2	6
2	021190	WASHER, FLAT 3/8 STD	6
3	600080	BOLT, HFH 3/8-16	6
4	600120	NUT, HFH NYLOC 3/8-16	12
5	710060	SIDE EXTENSION FR FILLER	1
6	710450	REAR DRIVE SHIELD	1

DRIVE SYSTEM ASSEMBLY (HYD. IN CAB CONTROL)

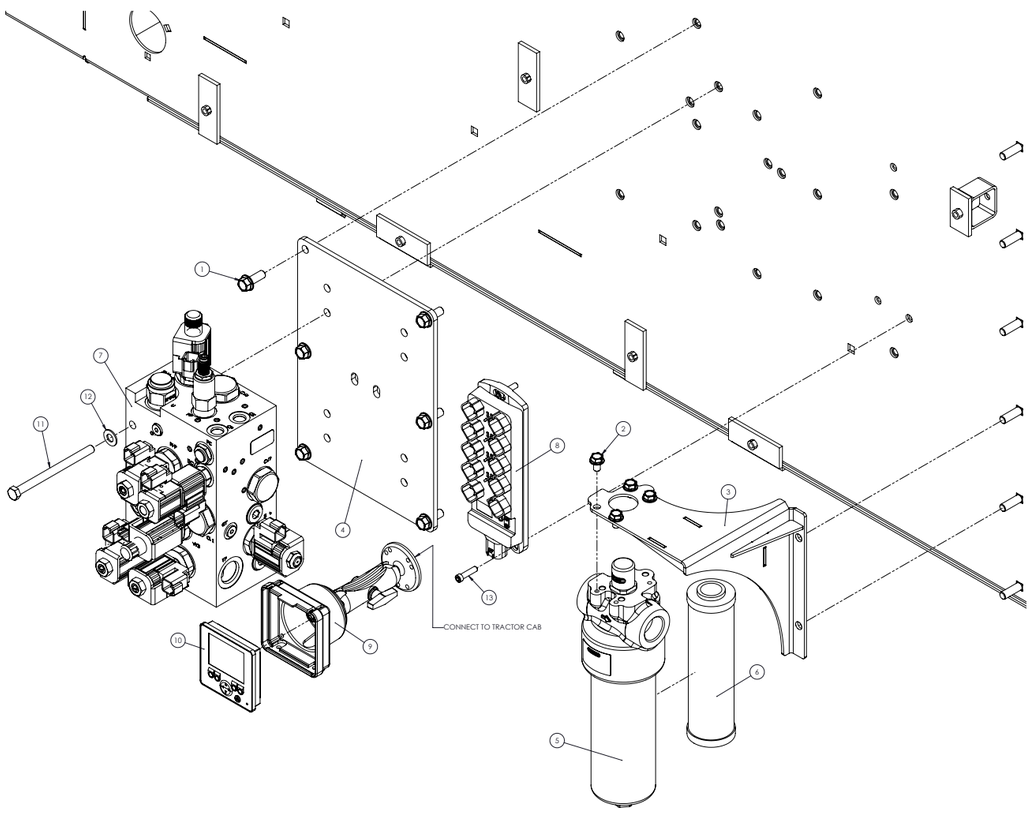

ITEM NO.	PART NUMBER	DESCRIPTION	QTY.
1	600050	BOLT, HFH 3/8-16 X 1.00"	6
2	600065	BOLT, HFH 5/16-24	4
3	710005	FILTER MOUNT WELDMENT	1
4	710475	BLOCK STIFFNER PLATE	1
5	710725	FILTER, HIGH FLOW	1
6	710726	FILTER ELEMENT,	1
7	710750	MANIFOLD, HYD ELECTRIC	1
8	710761	CONTROLLER JUNCTION	1
9	710763	RAM MOUNT KIT,	1
10	710764	DISPLAY, CONTROL BOX,	1
11	991170	BOLT, HHCS 3/8-16 X 5	3
12	I120394	WASHER, FLAT 3/8 SAE	3
13	V067301	SCREW, SHCS 1/4-20 X 1	3

DRIVE SYSTEM ASSEMBLY (HYD. MANUAL CONTROL)

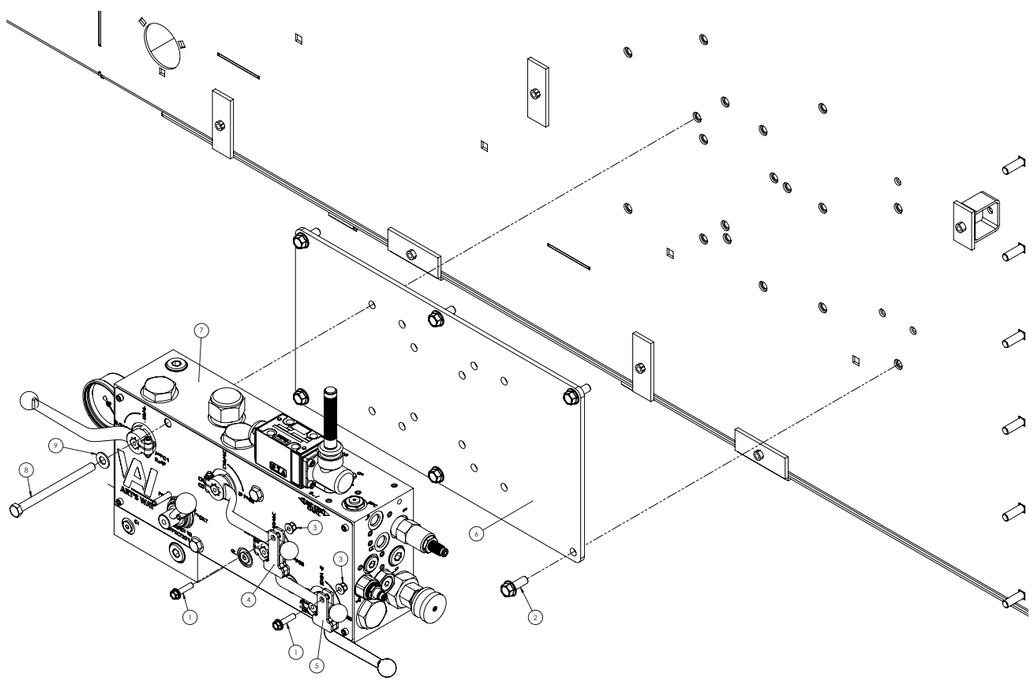

ITEM NO.	PART NUMBER	DESCRIPTION	QTY.
1	600020	BOLT, HFH 1/4-20 X 1.00"	2
2	600050	BOLT, HFH 3/8-16 X 1.00"	6
3	600100	NUT, HFH NYLOC 1/4-20	2
4	710090	HANDLE STOP, LONG	1
5	710095	HANDLE STOP, SHORT	1
6	710484	MOUNT PLATE,	1
7	710755	MANIFOLD, MANUAL	1
8	991170	BOLT, HHCS 3/8-16 X 5	3
9	I120394	WASHER, FLAT 3/8 SAE	3

OUTFEED ASSEMBLY (COMBO/FRONT UNLOAD)

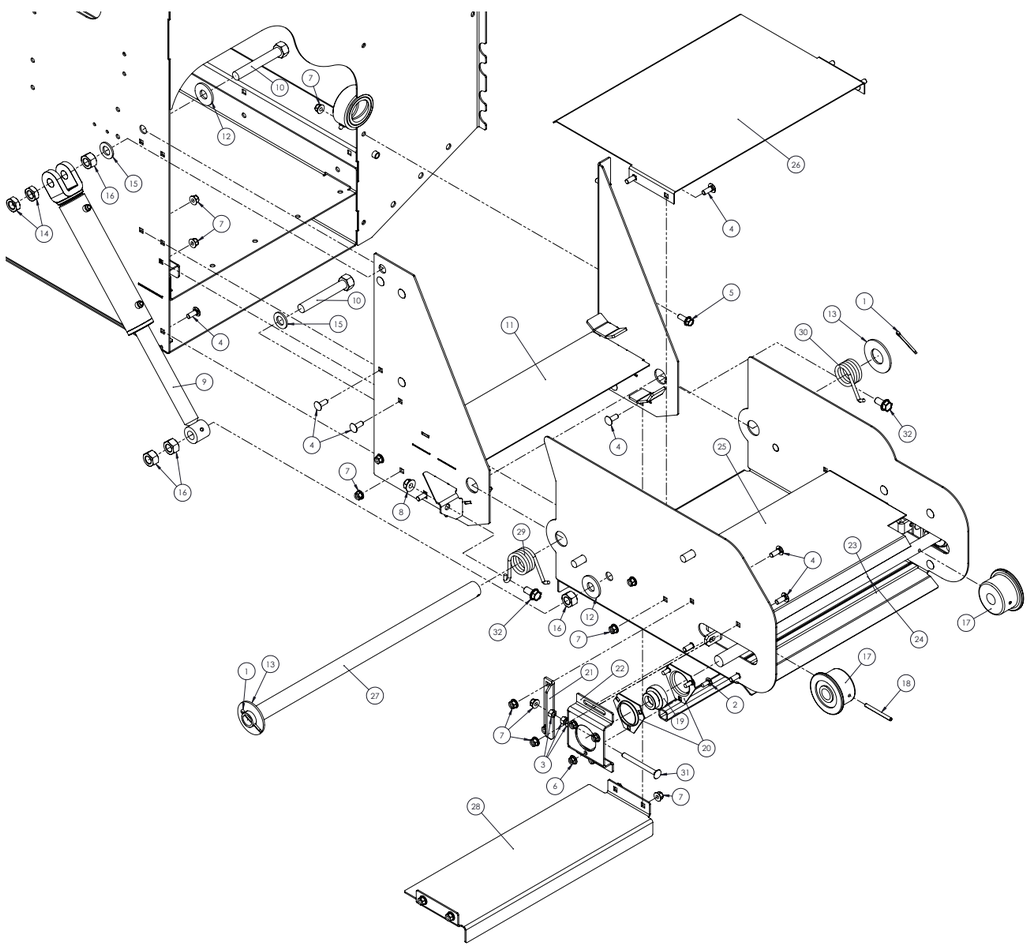

ITEM NO.	PART NUMBER	DESCRIPTION	QTY.
1	003950	PIN, COTTER 3/16 X 2	2
2	012410	BOLT, CRG 5/16-18X3/4	6
3	027260	NUT, HEX 3/8-16 GR5	6
4	170530	BOLT, CRG 3/8-16 X 1"	23
5	600050	BOLT, HFH 3/8-16 X 1.00"	3
6	600110	NUT, HFH NYLOC 5/16-18	6
7	600120	NUT, HFH NYLOC 3/8-16	28
8	600140	NUT, HFH NYLOC 1/2-13	2
9	632600	2" X 8" PRINCE	1
10	710476	BOLT, CYLINDER MOUNT	2
11	710575	OUTFEED WLDT	1
12	990710	WASHER, FLAT 3/4 STD	2
13	1100925	WASHER, MACHINE, 1-1/4" 10 GA Z5	2
14	E552038	NUT, JAM 3/4-10 HEX	2
15	I131017	WASHER, FLAT	2
16	J14H794	NUT, HEX 3/4-10 GR5 ZN	4
17	MP01.60500.5	ROLLER, OUTFEED	2
18	MP01.74140	PIN, ROLL .25 X 2	2
19	MP01.77500	BEARING - SPHERICAL 1	2
20	MP14.77107	FLANGETTE	4
21	MP16.20006.5	PLATE, TAKEUP	2
22	MP16.20007.5	BRACKET, BEARING	2
23	MP16.20853.7	FRAME-OUTFEED WLDMNT	1
24	MP16.20861	CENTER STRINGER	1
25	MP16.20863.7	PAN WELDMENT	1
26	MP16.20870.7	PAN - FOLDING OUTFEED EXT	1
27	MP16.20871.7	TUBE - PIVOT OUTFEED	1
28	MP16.20873.7	PAN, OUTFEED RETURN	1
29	MP32.00737	STRINGER TORSION - RH	1
30	MP32.00738	STRINGER TORSION - LH	1
31	MP901759	BOLT, CRG 3/8-16 X 4"	2
32	MP903952	HHDBLT - 1/2-13 X 1 WHZ	2

HYDRAULICS ASSEMBLY (COMBO UNLOAD)

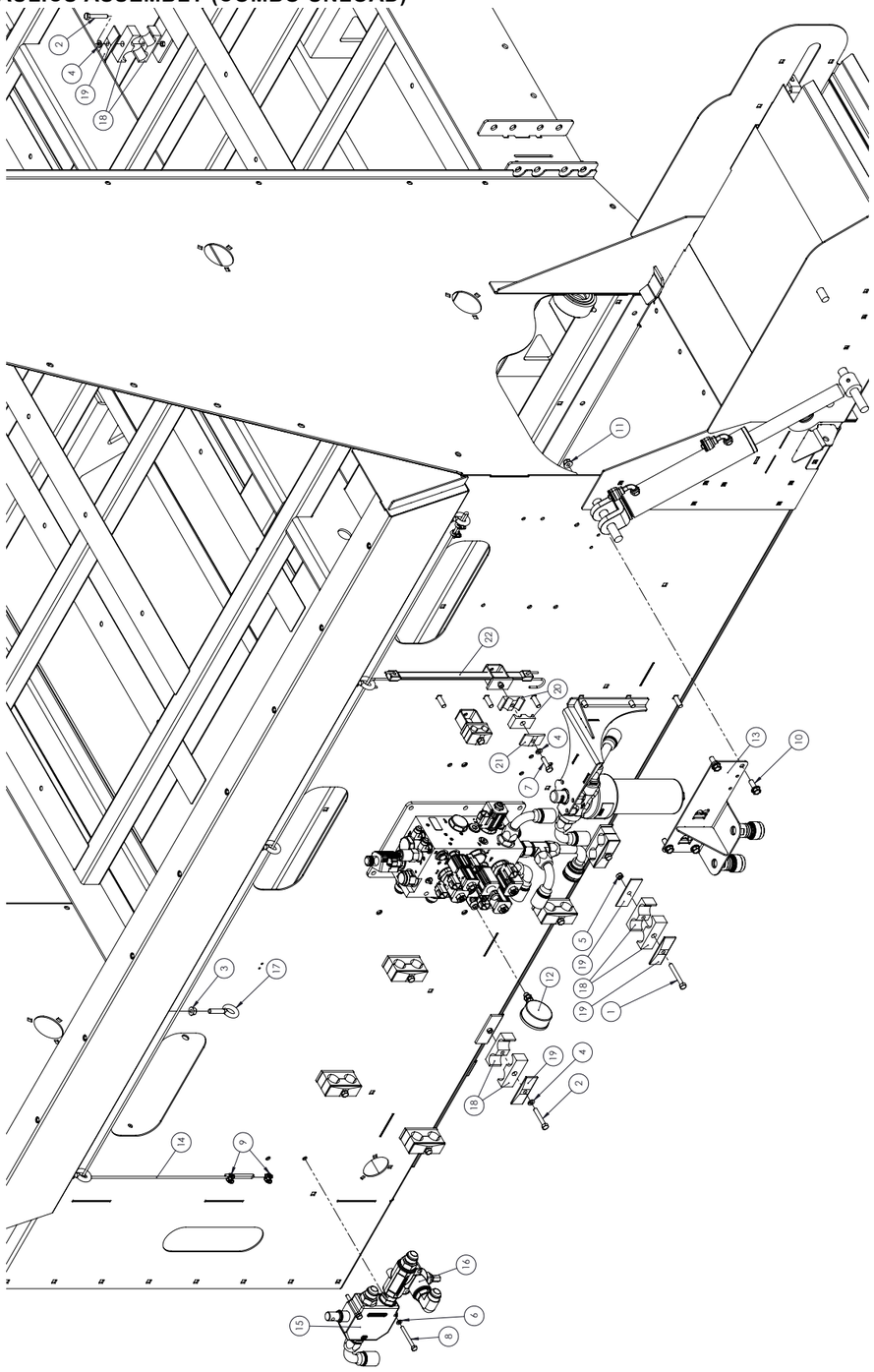

ITEM NO.	PART NUMBER	DESCRIPTION	QTY. (16')	QTY. (18')	QTY. (20')
1	009800	BOLT, HHCS 5/16-18 X 2 1/2	1	1	1
2	017120	BOLT, HHCS 5/16-18 X 2 G	15	15	15
3	020180	NUT, LOCK 3/8-16 FLG	5	5	5
4	023620	WASHER, LOCK 5/16	17	17	17
5	025670	NUT, LOCK 5/16-18	1	1	1
6	029440	WASHER, LOCK 1/4 SAE	2	2	2
7	030030	BOLT, HHCS 5/16-18 X1-1/4 GR5	2	2	2
8	031560	BOLT, HHCS 1/4-20 X 2-1/2	2	2	2
9	148120	CLAMP, 3/16" WIRE ROPE	4	4	4
10	600050	BOLT, HFH 3/8-16 X 1.00"	4	4	4
11	600120	NUT, HFH NYLOC 3/8-16	4	4	4
12	646200	GAUGE 2.5" 0-4K PSI STEM MOUNT	1	1	1
13	710490	HOSE/CABLE HOLDER WLDT	1	1	1
14	710590	CABLE, SAFETY PULL	1	1	1
15	710745	BLOCK, SAFETY KILL	1	1	1
16	710746	VALVE, RELIEF INLINE	1	1	1
17	710801	BOLT, EYE 3/18"-16	5	5	5
18	710811	CLAMP, HALF PLASTIC	28	30	32
19	710812	CLAMP, COVER PLATE	15	16	17
20	710816	CLAMP, HALF PLASTIC	4	4	4
21	710817	CLAMP, COVER PLATE	2	2	2
22	MP906533	RUBBER STRAP, 15"	1	1	1
20' INCAB BOX SHOWN					

HYDRAULICS ASSEMBLY (FRONT UNLOAD)

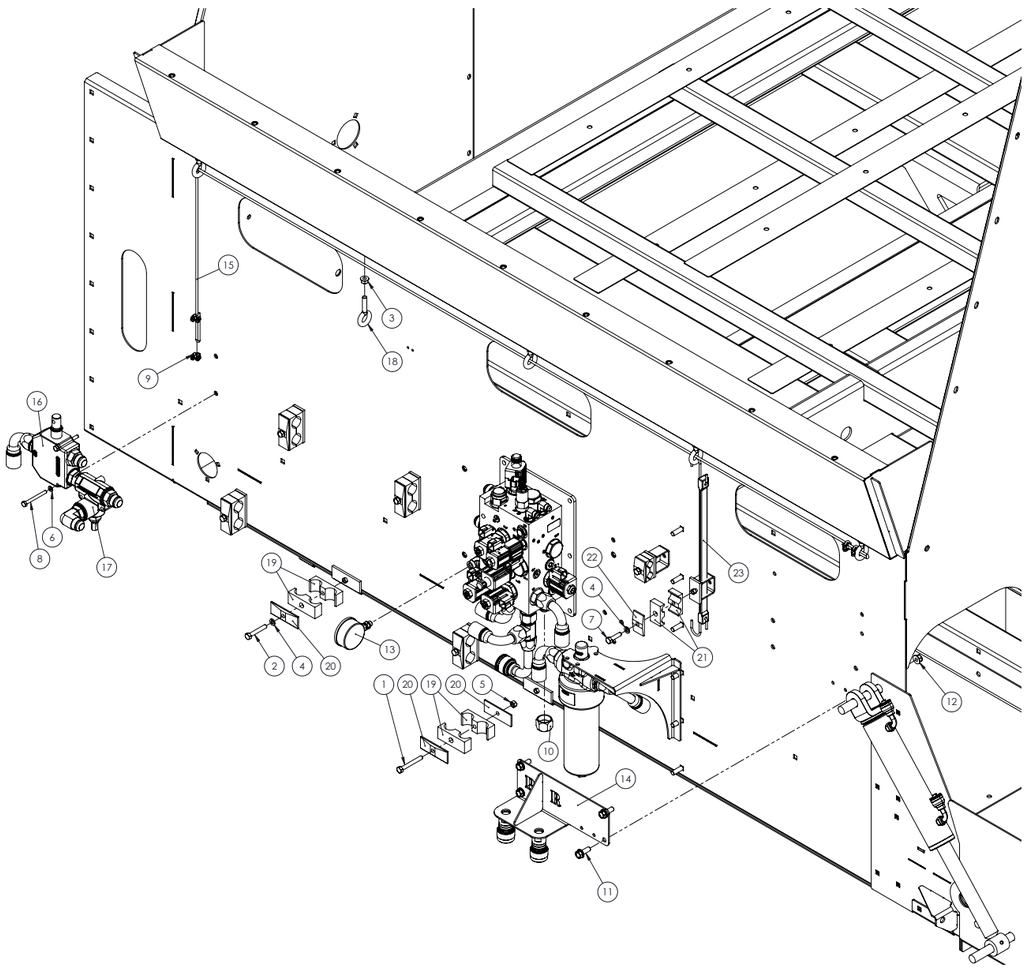

ITEM NO.	PART NUMBER	DESCRIPTION	QTY.
1	009800	BOLT, HHCS 5/16-18 X 2 1/2	1
2	017120	BOLT, HHCS 5/16-18 X 2 G	6
3	020180	NUT, LOCK 3/8-16 FLG	5
4	023620	WASHER, LOCK 5/16	8
5	025670	NUT, LOCK 5/16-18	1
6	029440	WASHER, LOCK 1/4 SAE	2
7	030030	BOLT, HHCS 5/16-18 X1-1/4 GR5 ZN	2
8	031560	BOLT, HHCS 1/4-20 X 2-1/2	2
9	148120	CLAMP, 3/16" WIRE ROPE	4
10	589320	CAP, HYD -12 FJIC	2
11	600050	BOLT, HFH 3/8-16 X 1.00"	4
12	600120	NUT, HFH NYLOC 3/8-16	4
13	646200	GAUGE 2.5" 0-4K PSI STEM MOUNT -4	1
14	710490	HOSE/CABLE HOLDER WLDT	1
15	710590	CABLE, SAFETY PULL	1
16	710745	BLOCK, SAFETY KILL	1
17	710746	VALVE, RELIEF INLINE	1
18	710801	BOLT, EYE 3/18"-16	5
19	710811	CLAMP, HALF PLASTIC	14
20	710812	CLAMP, COVER PLATE	8
21	710816	CLAMP, HALF PLASTIC	4
22	710817	CLAMP, COVER PLATE	2
23	MP906533	RUBBER STRAP, 15"	1
INCAB BOX SHOWN			

HYDRAULICS ASSEMBLY (REAR UNLOAD)

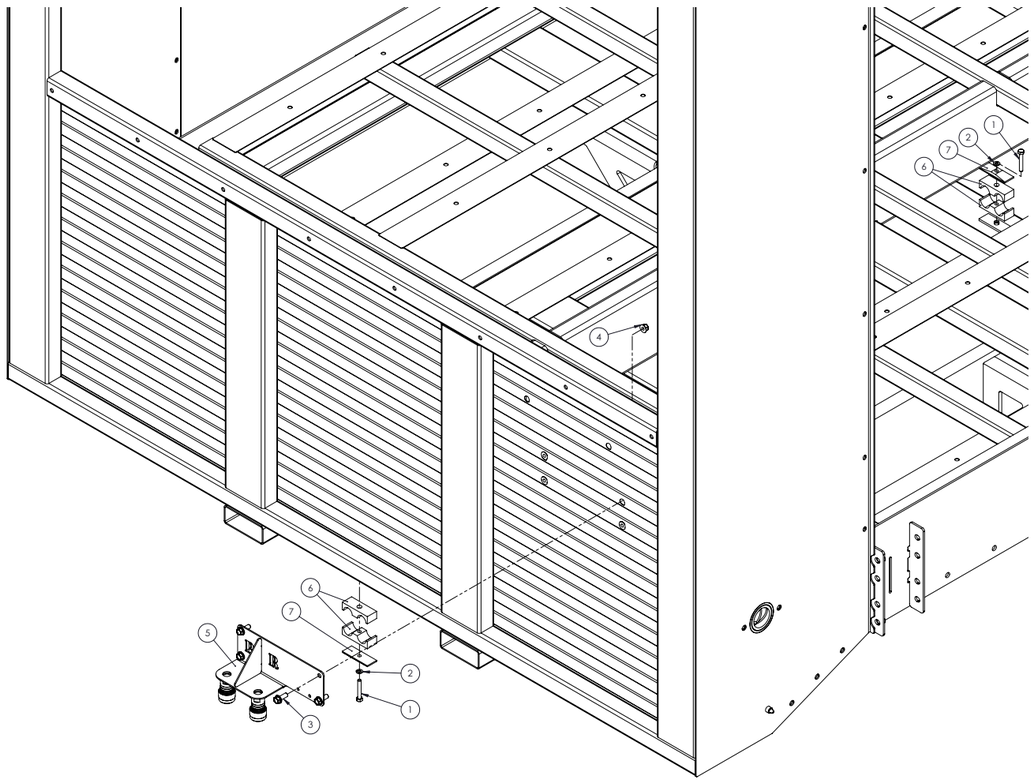

ITEM NO.	PART NUMBER	DESCRIPTION	QTY. (16')	QTY. (18')	QTY. (20')
1	017120	BOLT, HHCS 5/16-18 X 2 G	8	8	8
2	023620	WASHER, LOCK 5/16	8	8	8
3	600050	BOLT, HFH 3/8-16 X 1.00"	4	4	4
4	600120	NUT, HFH NYLOC 3/8-16	4	4	4
5	710490	HOSE/CABLE HOLDER WLDT	1	1	1
6	710811	CLAMP, HALF PLASTIC	12	14	16
7	710812	CLAMP, COVER PLATE	6	7	8
20' BOX SHOWN					

HYDRAULICS DIAGRAM (INCAB COMBO UNLOAD)

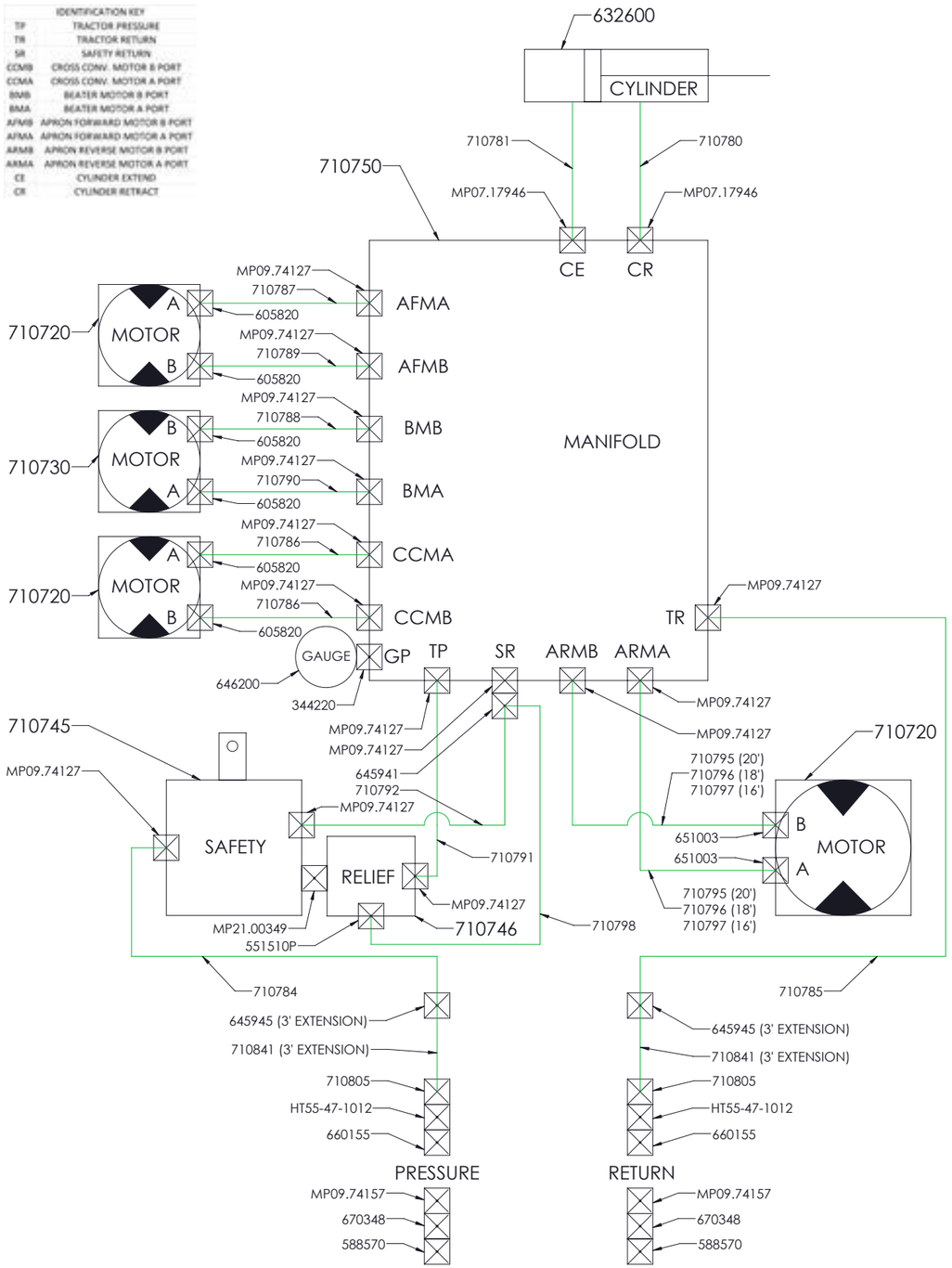

HYDRAULICS DIAGRAM (INCAB COMBO UNLOAD W/ FILTER)

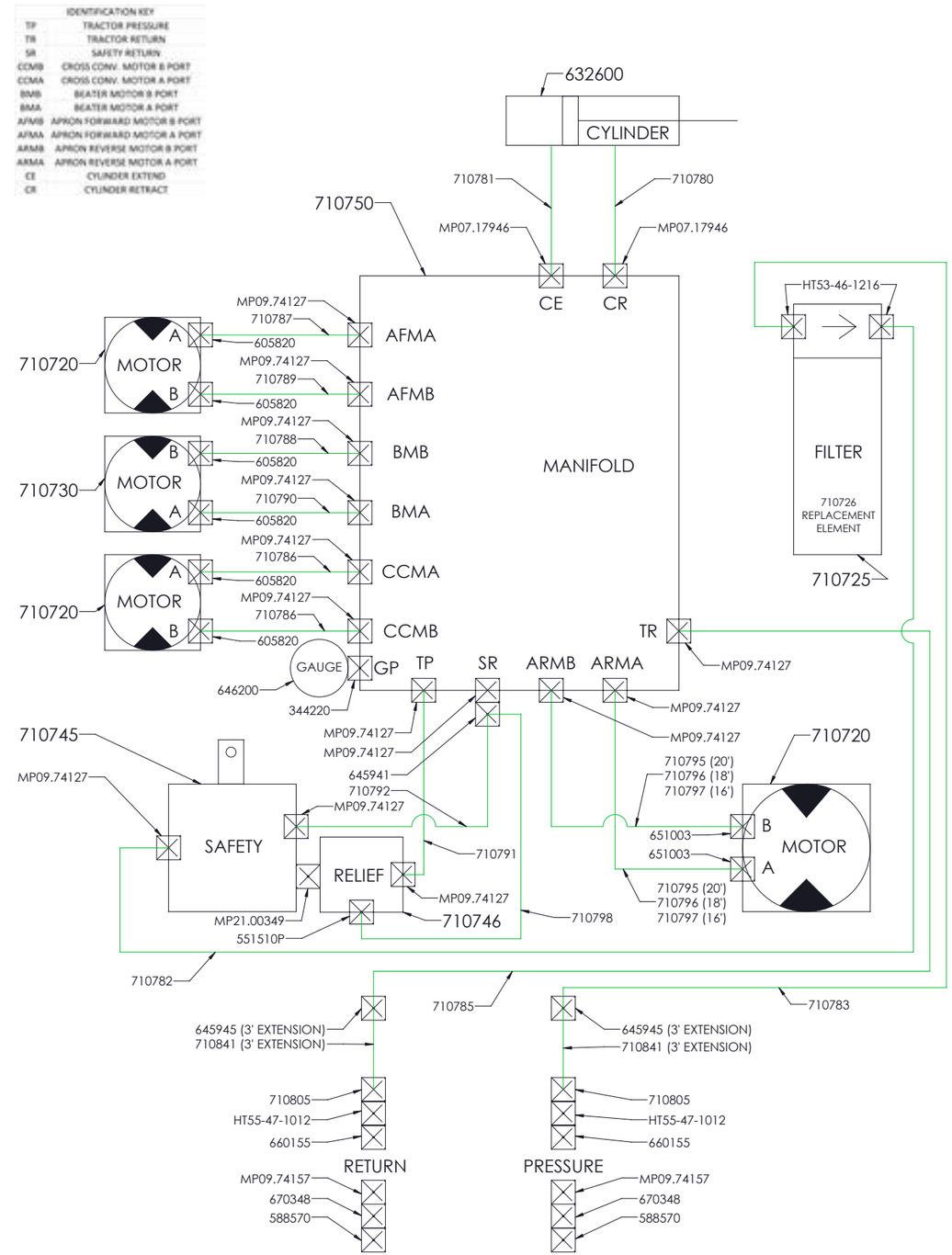

HYDRAULICS DIAGRAM (INCAB COMBO UNLOAD W/ DUMP)

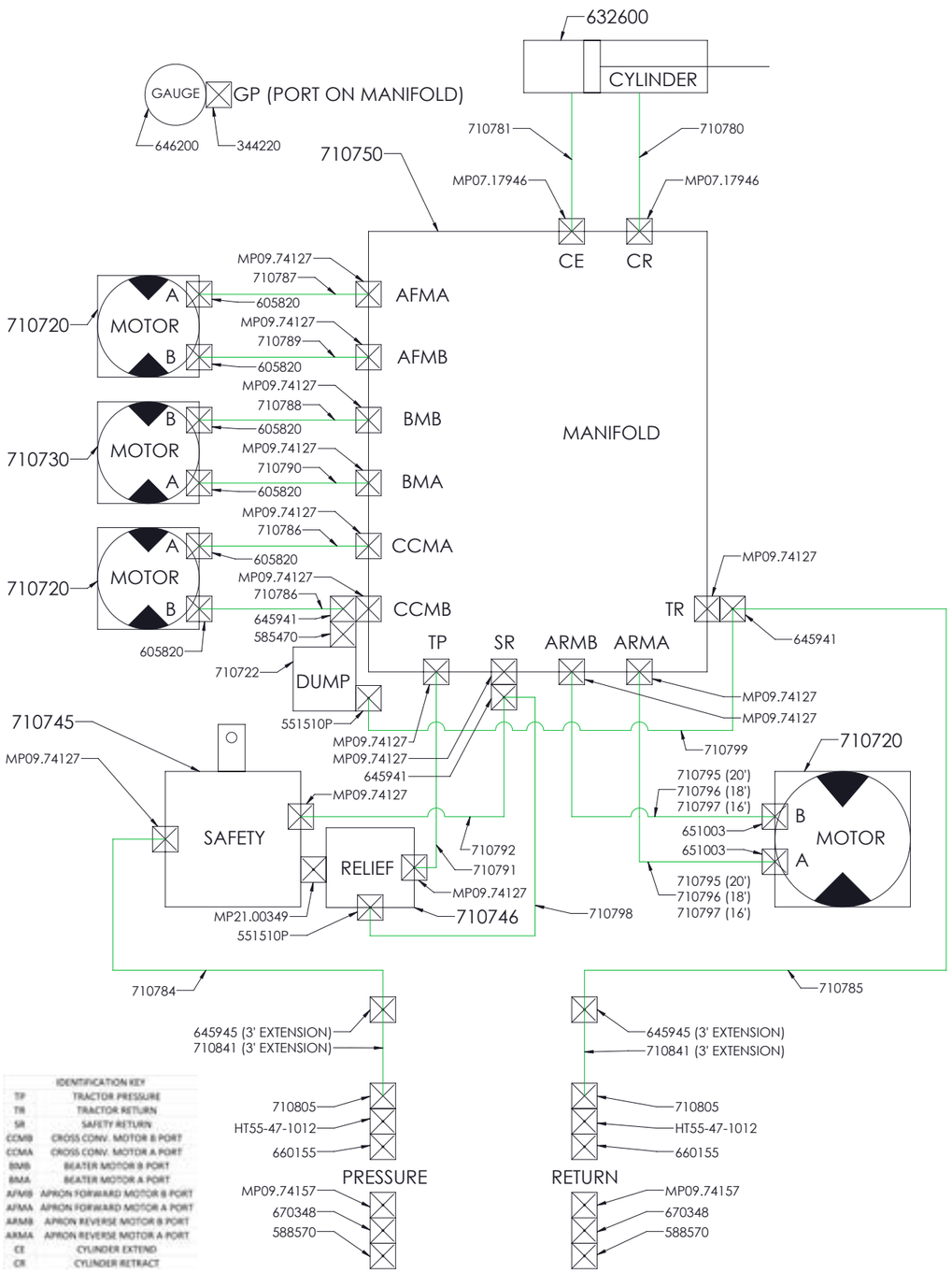

IDENTIFICATION KEY	
TP	TRACTOR PRESSURE
TR	TRACTOR RETURN
SR	SAFETY RETURN
CCMB	CROSS CONV. MOTOR B PORT
CCMA	CROSS CONV. MOTOR A PORT
BMB	BEATER MOTOR B PORT
BMA	BEATER MOTOR A PORT
AFMB	APRON FORWARD MOTOR B PORT
AFMA	APRON FORWARD MOTOR A PORT
ARMB	APRON REVERSE MOTOR B PORT
ARMA	APRON REVERSE MOTOR A PORT
CE	CYLINDER EXTEND
CR	CYLINDER RETRACT

HYDRAULICS DIAGRAM (INCAB COMBO UNLOAD W/ FILTER & DUMP)

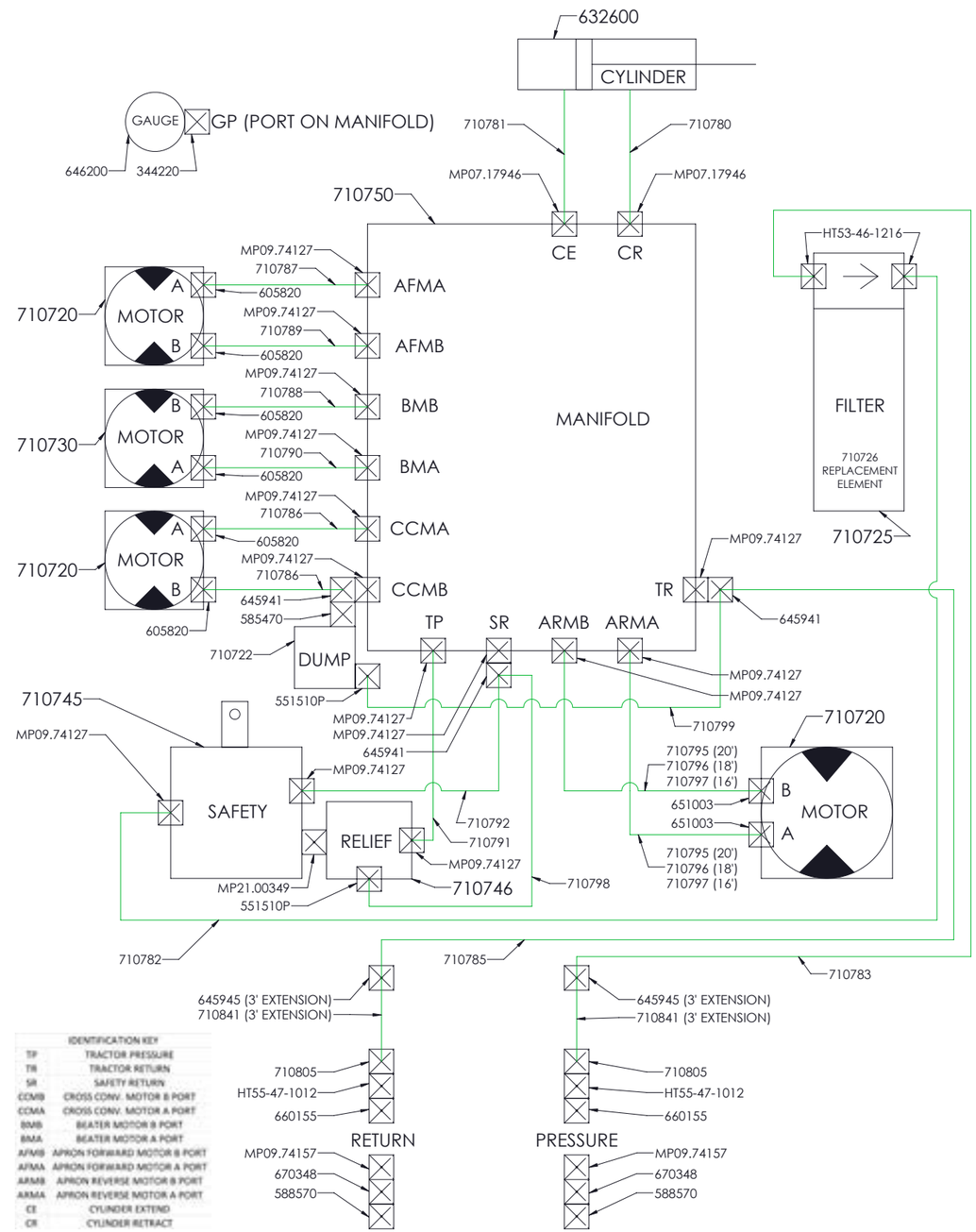

IDENTIFICATION KEY	
TP	TRACTOR PRESSURE
TR	TRACTOR RETURN
SR	SAFETY RETURN
CCMB	CROSS CONV. MOTOR B PORT
CCMA	CROSS CONV. MOTOR A PORT
BMB	BEATER MOTOR B PORT
BMA	BEATER MOTOR A PORT
AFMB	APRON FORWARD MOTOR B PORT
AFMA	APRON FORWARD MOTOR A PORT
ARMB	APRON REVERSE MOTOR B PORT
ARMA	APRON REVERSE MOTOR A PORT
CE	CYLINDER EXTEND
CR	CYLINDER RETRACT

HYDRAULICS DIAGRAM (INCAB COMBO UNLOAD W/ FILTER & BLEED ORIFICE)

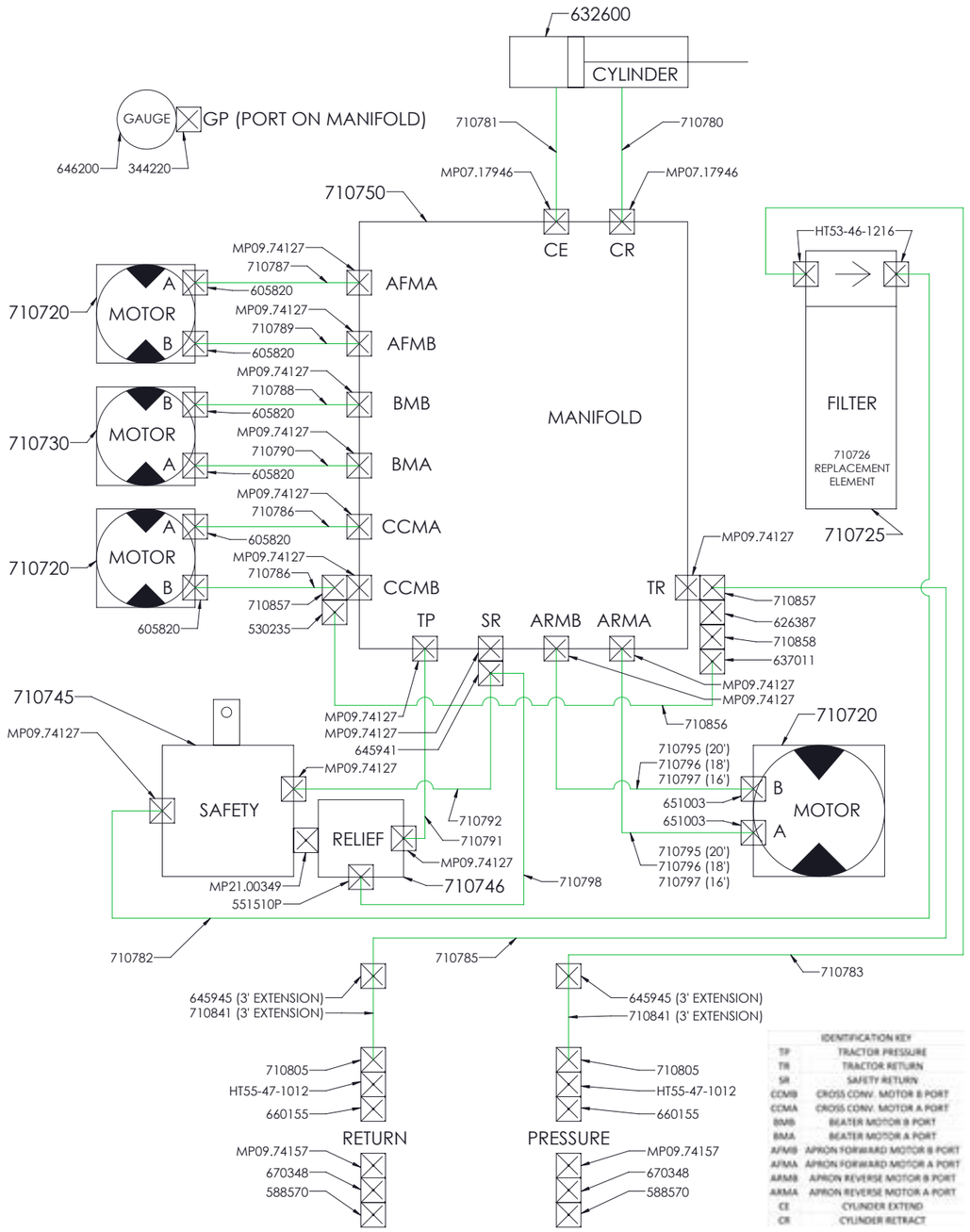

HYDRAULICS DIAGRAM (INCAB FRONT UNLOAD W/ FILTER & BLEED ORIFICE)

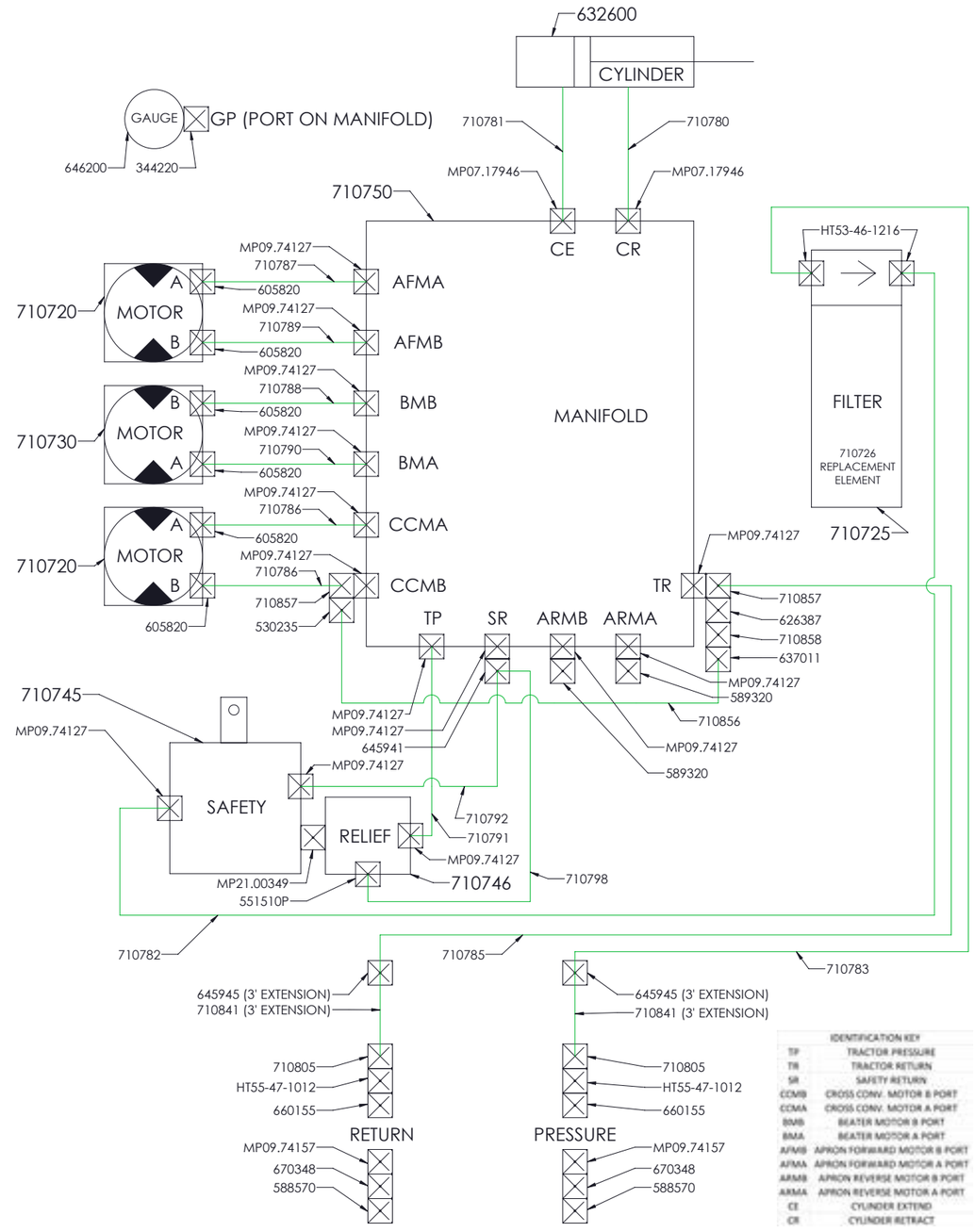

HYDRAULICS DIAGRAM (INCAB FRONT UNLOAD)

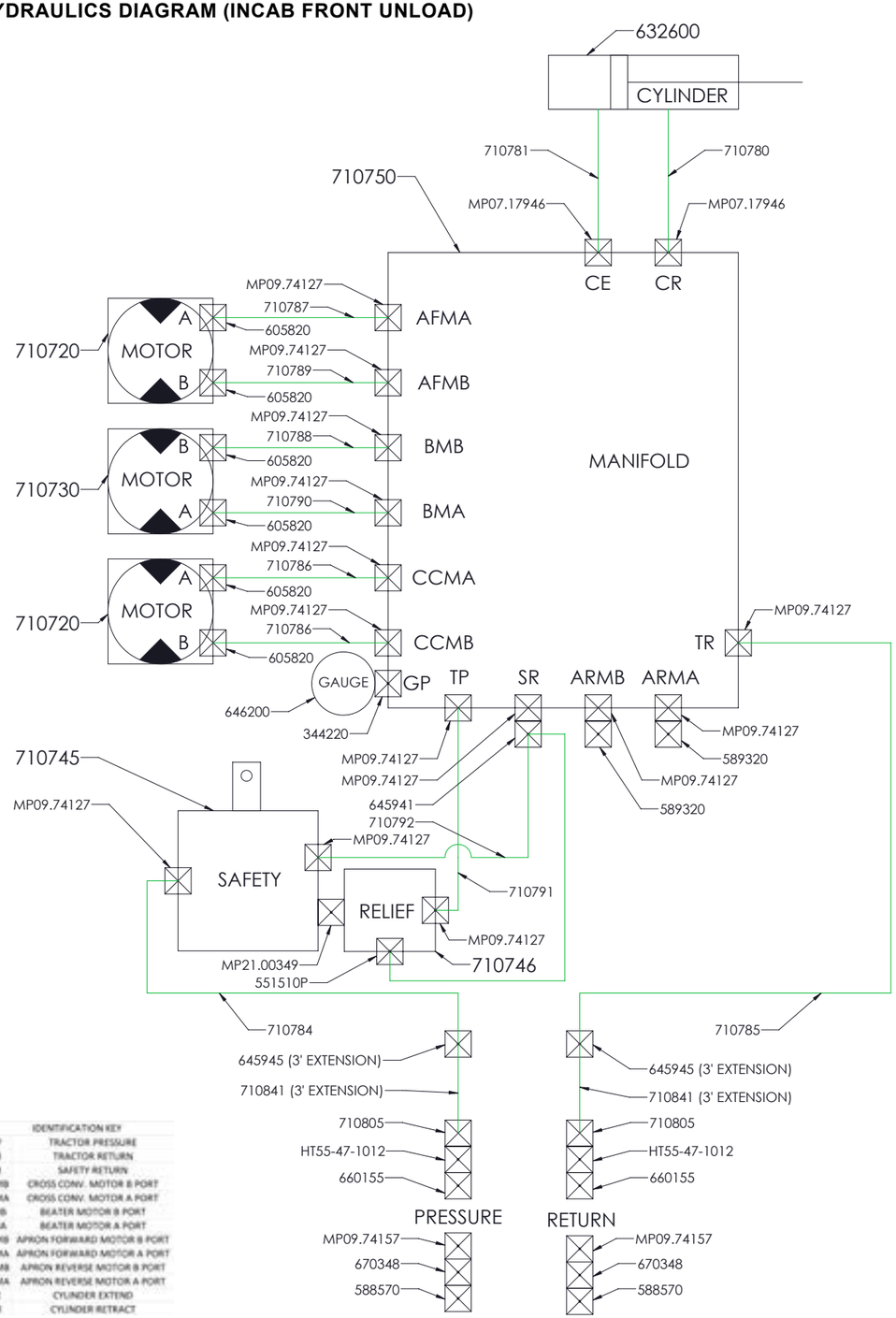

IDENTIFICATION KEY	
TP	TRACTOR PRESSURE
TR	TRACTOR RETURN
SR	SAFETY RETURN
CCMB	CROSS CONV. MOTOR B PORT
CCMA	CROSS CONV. MOTOR A PORT
BMB	BEATER MOTOR B PORT
BMA	BEATER MOTOR A PORT
AFMB	APRON FORWARD MOTOR B PORT
AFMA	APRON FORWARD MOTOR A PORT
ARMB	APRON REVERSE MOTOR B PORT
ARMA	APRON REVERSE MOTOR A PORT
CE	CYLINDER EXTEND
CR	CYLINDER RETRACT

HYDRAULICS DIAGRAM (INCAB FRONT UNLOAD W/ FILTER & DUMP)

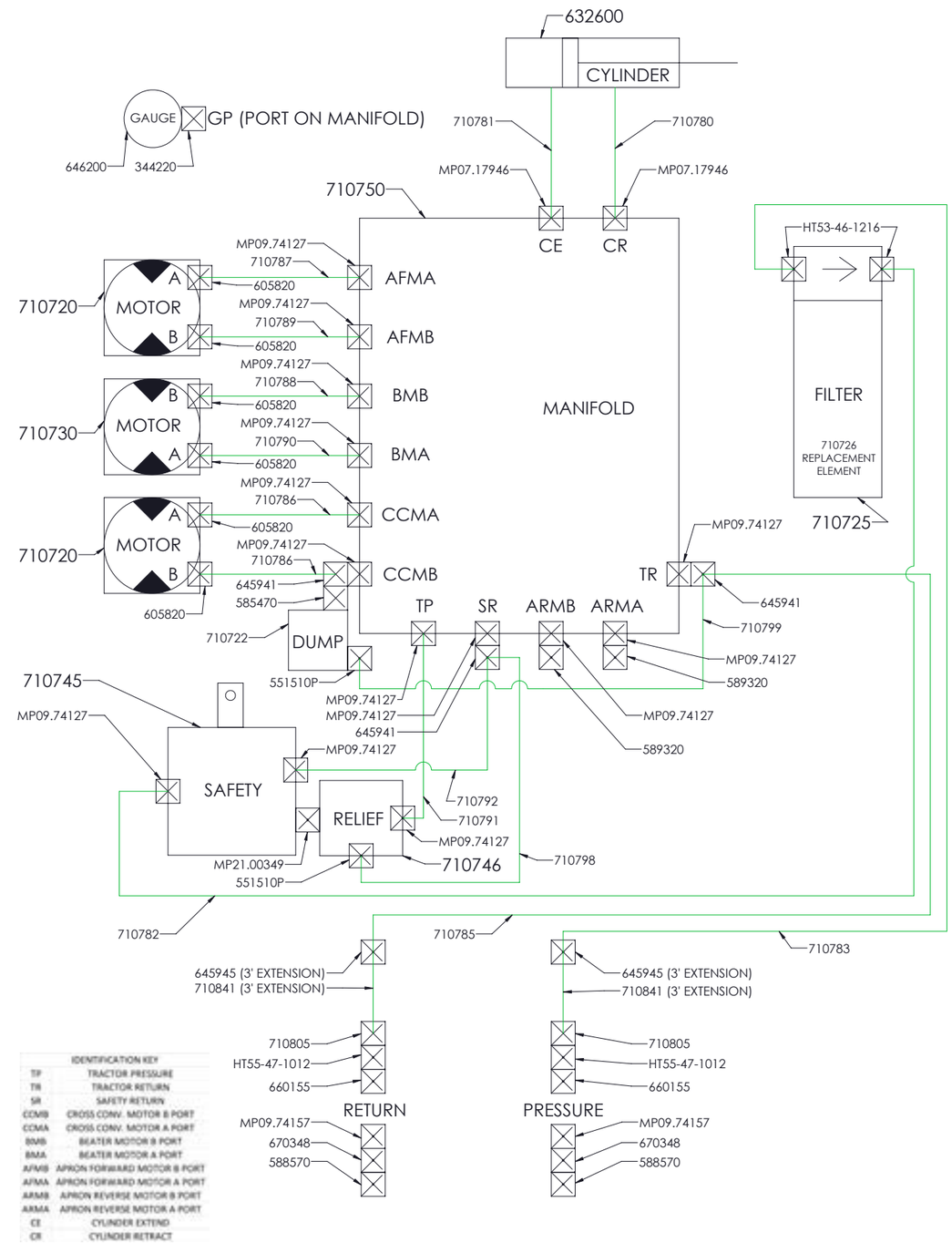

IDENTIFICATION KEY	
TP	TRACTOR PRESSURE
TR	TRACTOR RETURN
SR	SAFETY RETURN
CCMB	CROSS CONV. MOTOR B PORT
CCMA	CROSS CONV. MOTOR A PORT
BMB	BEATER MOTOR B PORT
BMA	BEATER MOTOR A PORT
AFMB	APRON FORWARD MOTOR B PORT
AFMA	APRON FORWARD MOTOR A PORT
ARMB	APRON REVERSE MOTOR B PORT
ARMA	APRON REVERSE MOTOR A PORT
CE	CYLINDER EXTEND
CR	CYLINDER RETRACT

HYDRAULICS DIAGRAM (MANUAL COMBO UNLOAD)

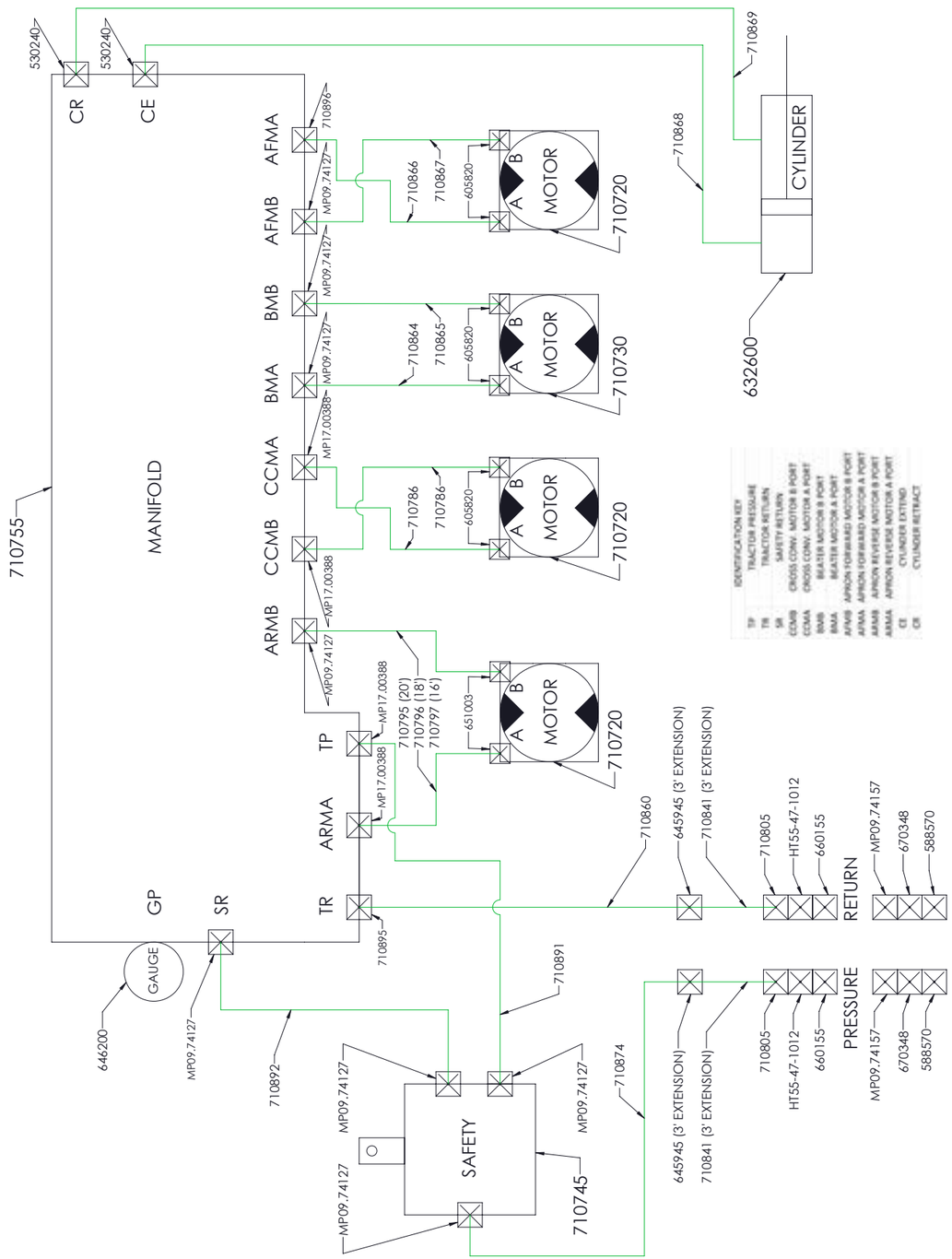

HYDRAULICS DIAGRAM (MANUAL FRONT UNLOAD)

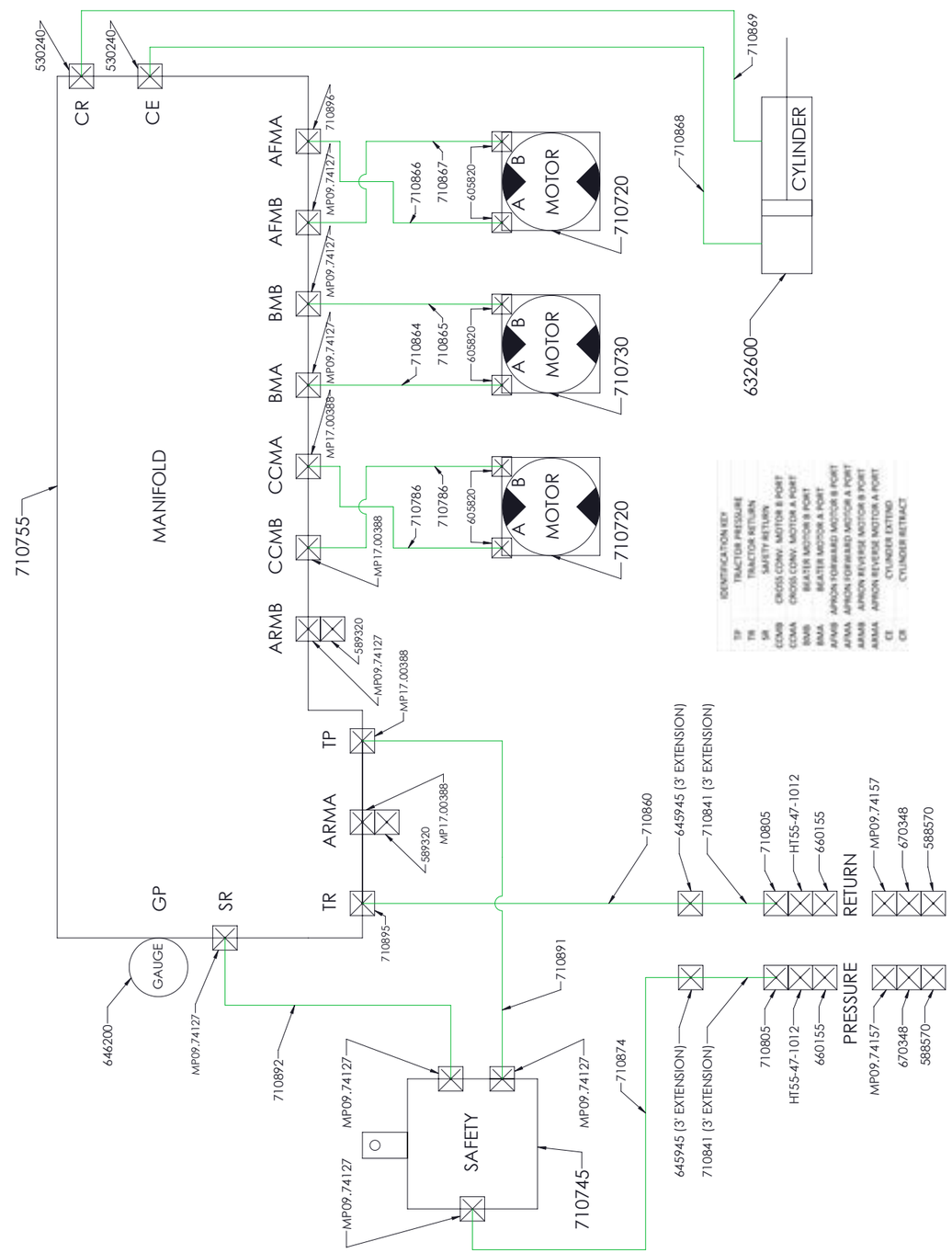

HYDRAULICS DIAGRAM (MANUAL REAR UNLOAD)

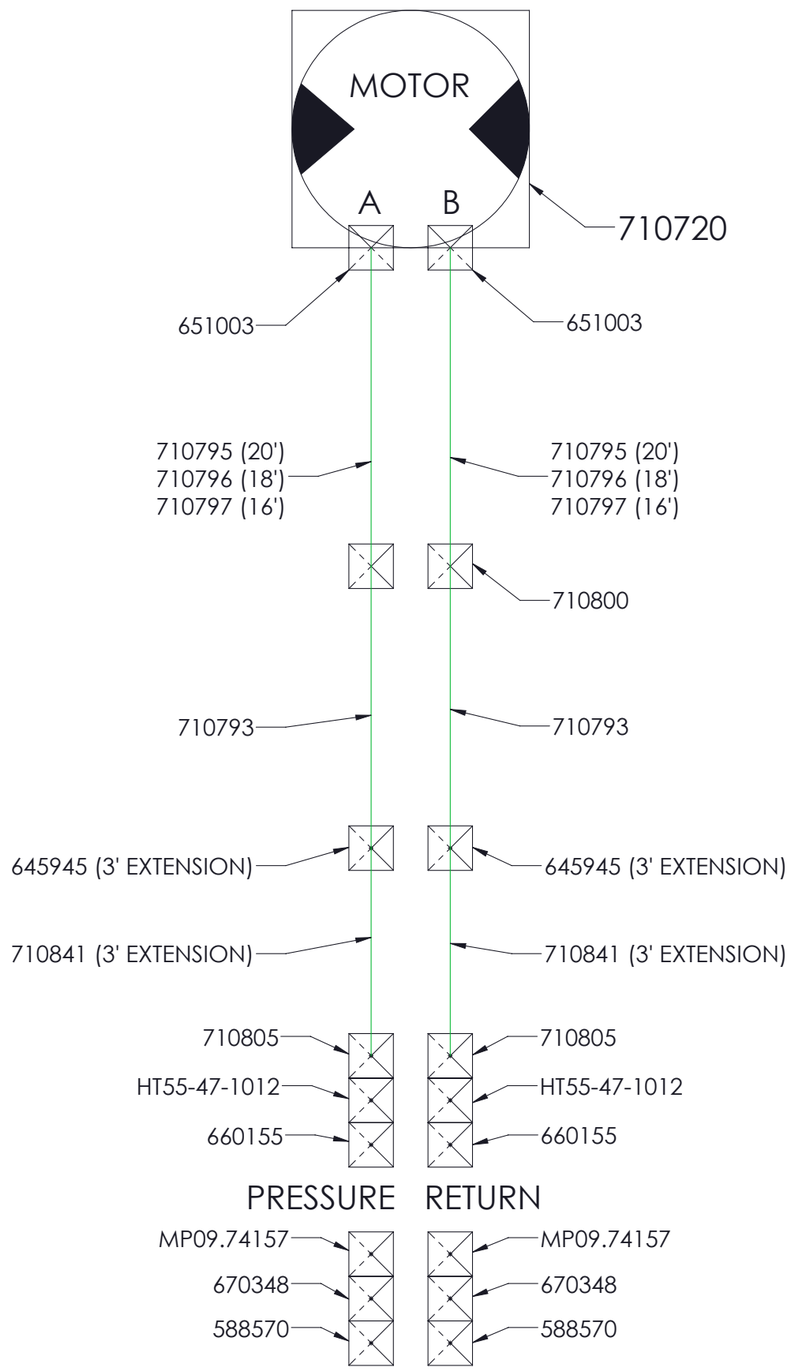

HYDRAULICS DIAGRAM (GATE DELAY)

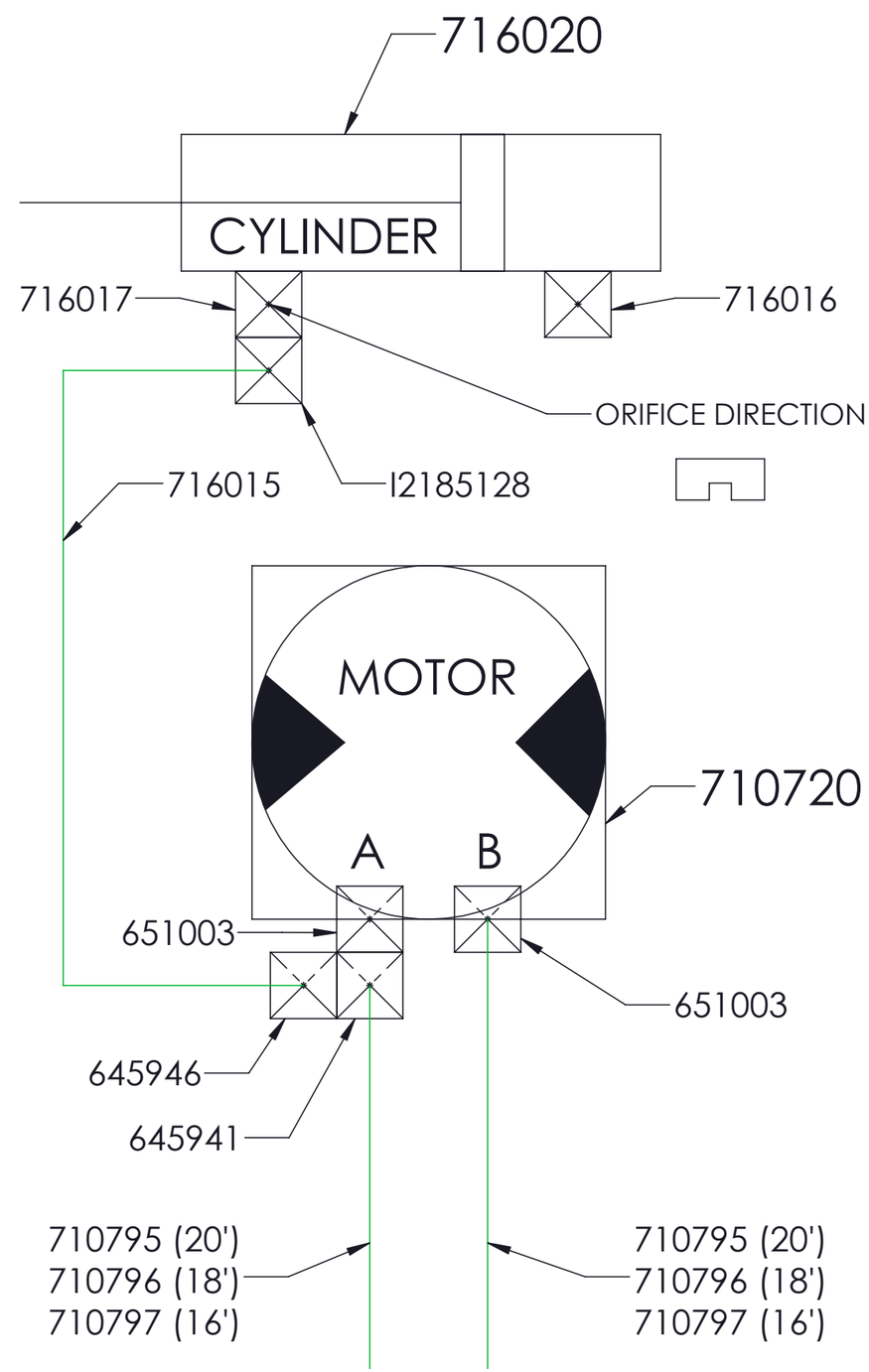

MANIFOLD ASSEMBLY (INCAB COMBO/FRONT UNLOAD) (GEN 1)

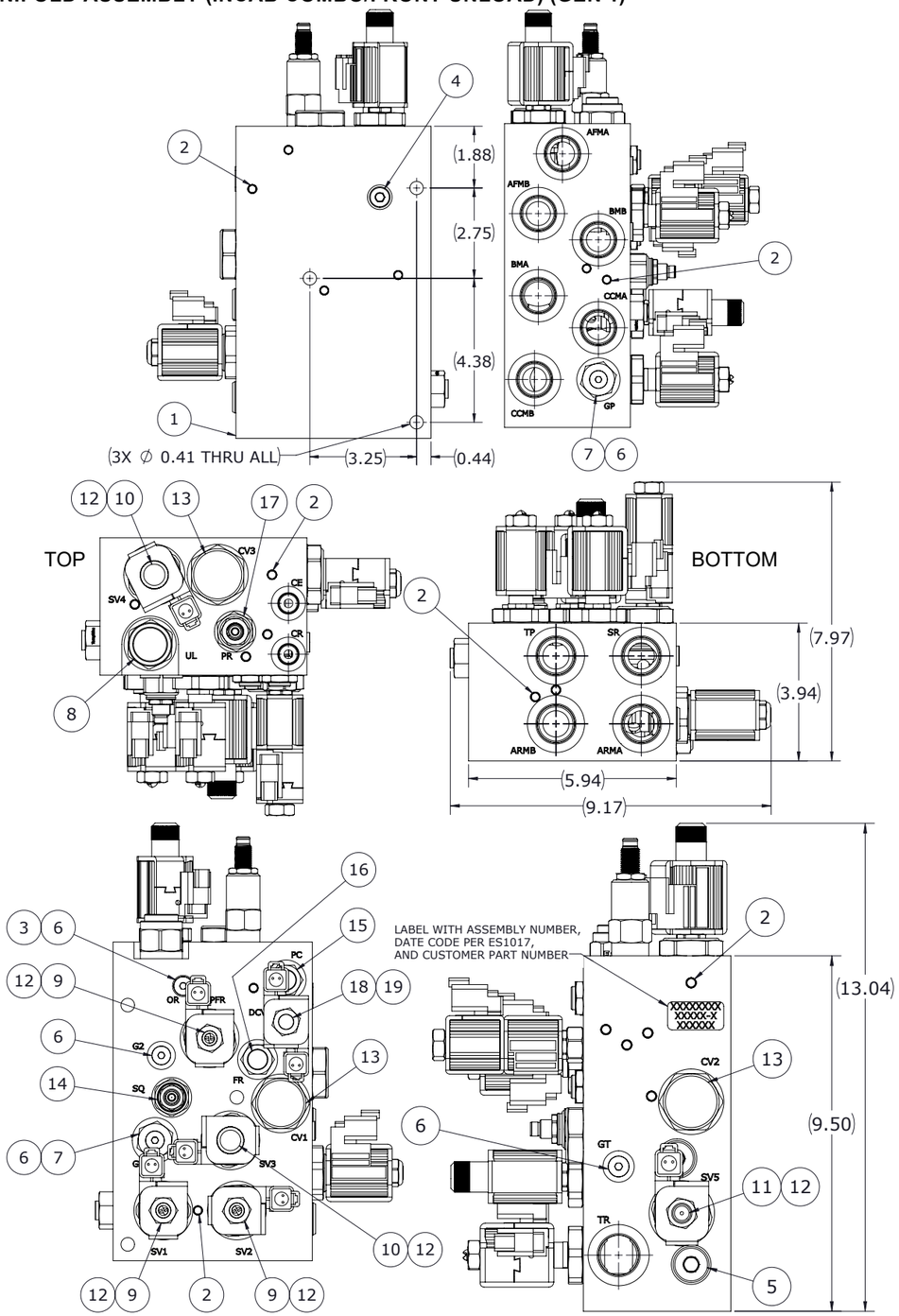

ITEM NO.	PART NUMBER	DESCRIPTION	QTY.
1	N/A	BODY, FORAGE BOX MANIFOLD	1
2	N/A	EXPANDER PLUG, 7 MM	20
3	710820	ORIFICE PLUG 5/16-24 0.031	1
4	710834	SAE-6 PLUG, ZERO-LEAK	1
5	710835	SAE-10 PLUG ZERO-LEAK	2
6	488970P	PLUG SAE -04 HOLLOW HEX	5
7	710822	FITTING RED/EXP -10 MORB / -4 FORB	2
8	710823	CART, LOGIC SPOOL N/C L/S	1
9	646209	CART, PROP 2W2P NC POPPET	3
10	710824	CART, PROP 2W2P NO POPPET	2
11	710825	CART, SOLENOID NO POPPET	1
12	710826	SUPER COIL 5/8 ID 12 VDC DEUTSCH	6
13	710827	CART, CHECK VALVE	3
14	710828	CART, SEQUENCE VALVE, EXT. PILOT	1
15	710829	CART, PO CHECK VALVE 65 PSI, 3:1	1
16	710830	CART, FLOW REGULATOR 1.50 GPM	1
17	710831	CART, PRESSURE RED/REL D.A.	1
18	710832	CART, 4W3P SOLENOID CLOSED CENTER	1
19	710833	SUPER COIL 1/2 ID 12 VDC DEUTSCH	2

MANIFOLD ASSEMBLY (MANUAL COMBO/FRONT UNLOAD)

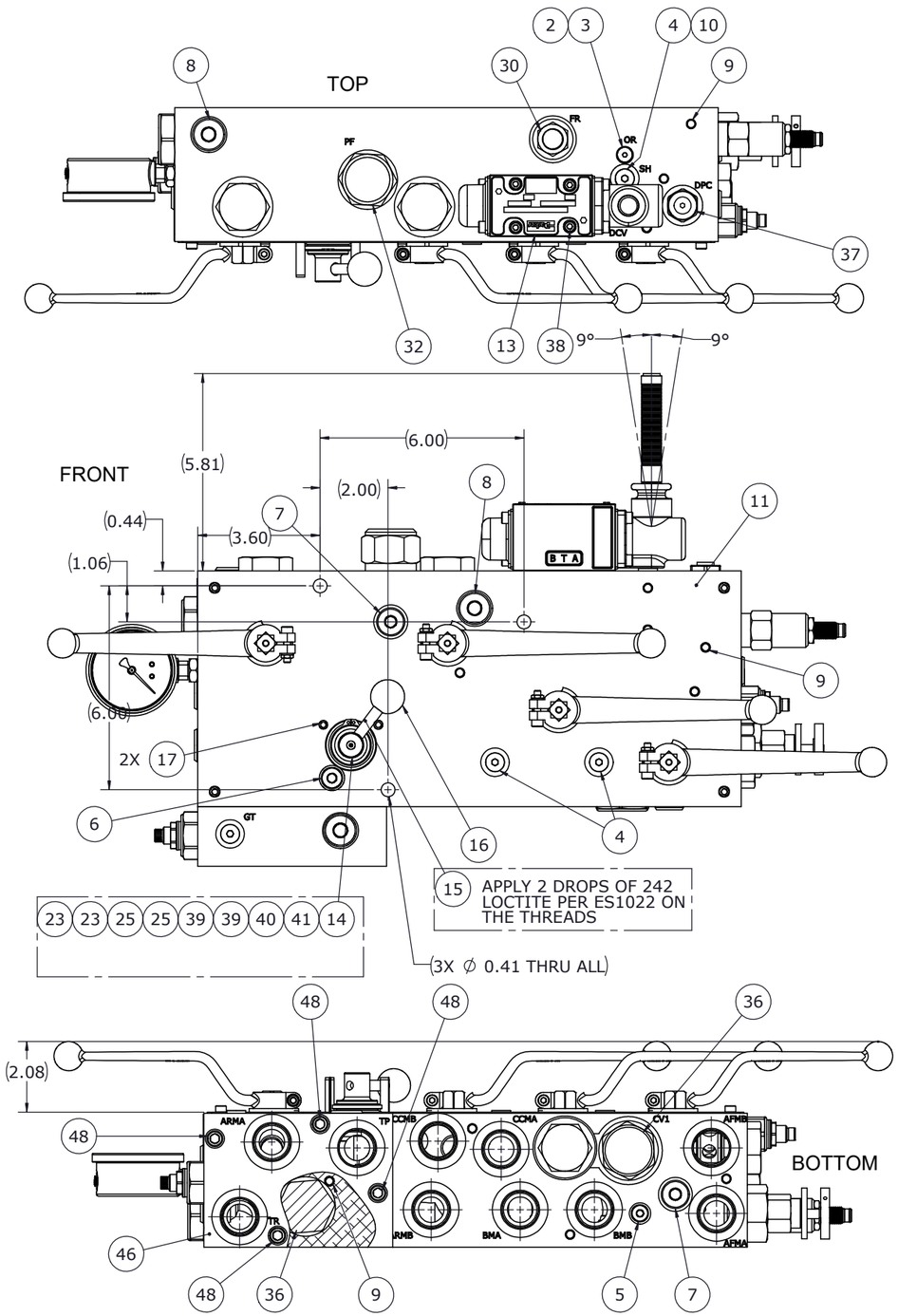

ITEM NO.	PART NUMBER	DESCRIPTION	QTY.
1	N/A	BODY, MANUAL FORAGE BOX MANIFOLD	1
2	710820	ORIFICE PLUG 5/16-24 0.031	1
3	710611	PLUG SAE -02 HOLLOW HEX	1
4	488970P	PLUG SAE -04 HOLLOW HEX	4
5	710612	SAE-4 PLUG, ZERO-LEAK	2
6	710834	SAE-6 PLUG, ZERO-LEAK	1
7	710613	SAE-8 PLUG ZERO-LEAK	4
8	710835	SAE-10 PLUG ZERO-LEAK	11
9	N/A	EXPANDER PLUG, 7 MM	25
10	710614	CART, SHUTTLE VALVE	1
11	710615	PLAQUE, FORGE TRAILER MANIFOLD	1
12	710616	SHCS 10-24 X 0.38 LG - FLZNNCL	4
13	710617	D03, 3P4W, LEVER A-SIDE, FLOAT CENTER,	1
14	710618	SPOOL, 2P SELECTOR	1
15	710619	STUD HANDLE, STUD, 5/16-18 X 2.00	1
16	710620	ROUND KNOB, 5/16-18 THREAD, 1.00"	1
17	710621	SPRING PIN, 1/4 X 1.50", 18-8 STAINLESS	2
18	710622	SPRING PIN, 1/4 X 0.50", STEEL ZINC	4
19	710623	BALL VALVE - SEAT	8
20	710624	BALL VALVE - PASS THROUGH	4
21	710625	BALL VALVE - ROTATION CONNECTOR	4
22	710626	O-RING BUNA N 70 DURO -113	4
23	710627	O-RING BUNA N 70 DURO -120	2
24	710628	BACK-UP RING SCARF CUT TEFLON -113	4
25	710629	BACK-UP RING SCARF CUT TEFLON -120	2

MANIFOLD ASSEMBLY (MANUAL COMBO/FRONT UNLOAD) (CONTINUED)

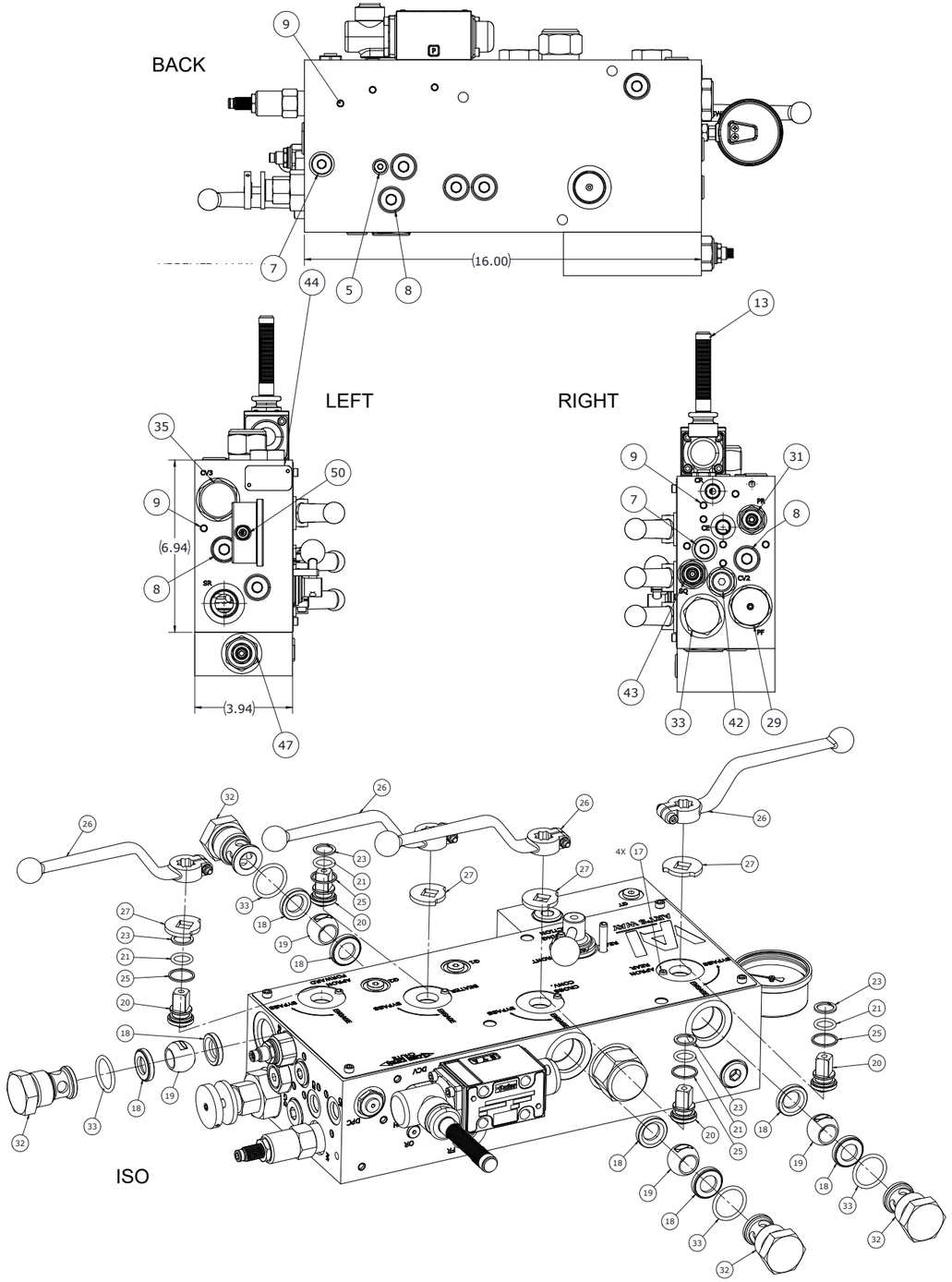

ITEM NO.	PART NUMBER	DESCRIPTION	QTY.
26	710630	SOLID TEFLON SEAL	4
27	710631	HANDLE	4
28	710632	BALL VALVE - LIMIT PLATE	4
29	710633	CART, PRIORITY FLOW CONTROL	1
30	710830	CART, FLOW REGULATOR 1.50 GPM	1
31	710831	CART, PRESSURE RED/REL D.A.	1
32	646211	CART, LOGIC SPOOL N/C L/S	1
33	710634	ADAPTER STRAIGHT, MORB STEEL	4
34	710635	O-RING BUNA N 90 DURO -914	4
35	710636	CART, CHECK VALVE	1
36	710827	CART, CHECK VALVE	2
37	710637	CART, DUAL PILOT CHECK, 25 PSI, 3:1	1
38	710638	BOLT KIT, 10-24 X 1.25 4 PER KIT	1
39	710639	SPIRAL RETAINING RING, EXTERNAL 1-	2
40	710640	V-RING SEAL, 30 MM SHAFT DIA.	1
41	710641	RETAINING RING, EXTERNAL 1-3/16"	1
42	710642	CART, CHECK VALVE, REV. POPPET, 25 PSI	1
43	710828	CART, SEQUENCE VALVE, EXT. PILOT	1
44	N/A	NAMEPLATE	1
45	710643	RED VINYL PLASTIC ROUND GRIP, RIBBED	1
46	710644	BODY, RELIEF ADDER	1
47	710837	CART, P.O. RELIEF VALVE, 300 - 3000 PSI	1
48	710645	5/16-18 X 1.75" SHCS ZINC	4
49	710646	O-RING BUNA N 90 DURO -125	3
50	646200	GAUGE - 2.5" LIQUID FILLED, STEM	1

ELECTRONICS ASSEMBLY

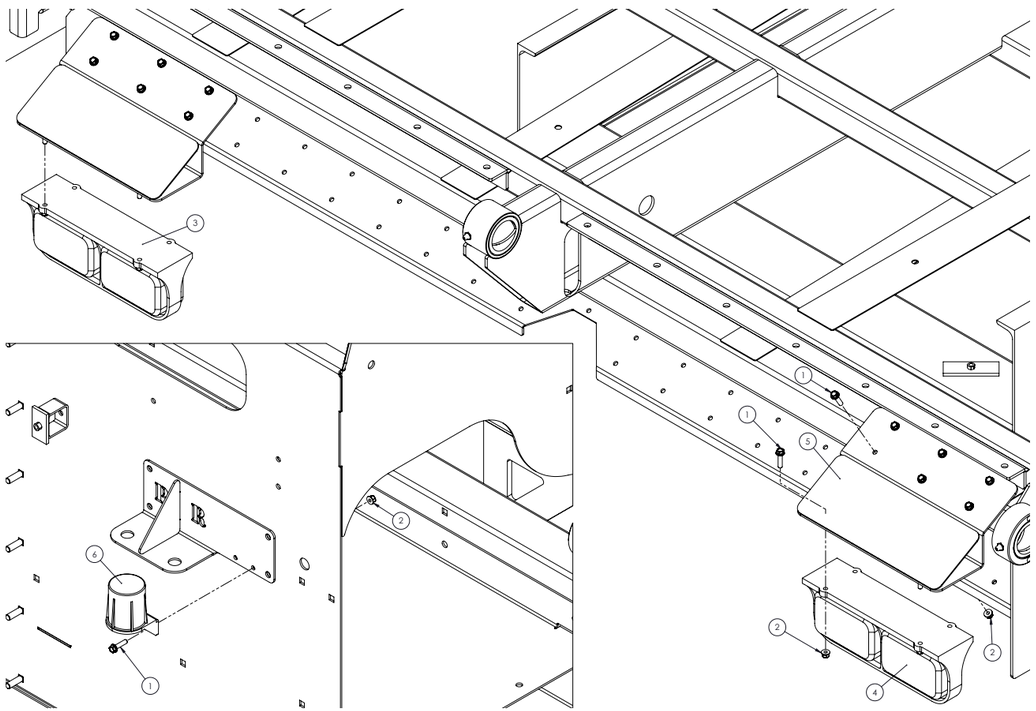

ITEM NO.	PART NUMBER	DESCRIPTION	QTY.
1	600020	BOLT, HFH 1/4-20 X 1.00"	22
2	600100	NUT, HFH NYLOC 1/4-20	22
3	642580	LIGHT, LED	1
4	642590	LIGHT, LED	1
5	710460	LIGHT BRACKET,	2
6	JPT1296	BRACKET, STORAGE HOLDER 7 POLE	1

ELECTRONICS ASSEMBLY (MANUAL REAR UNLOAD)

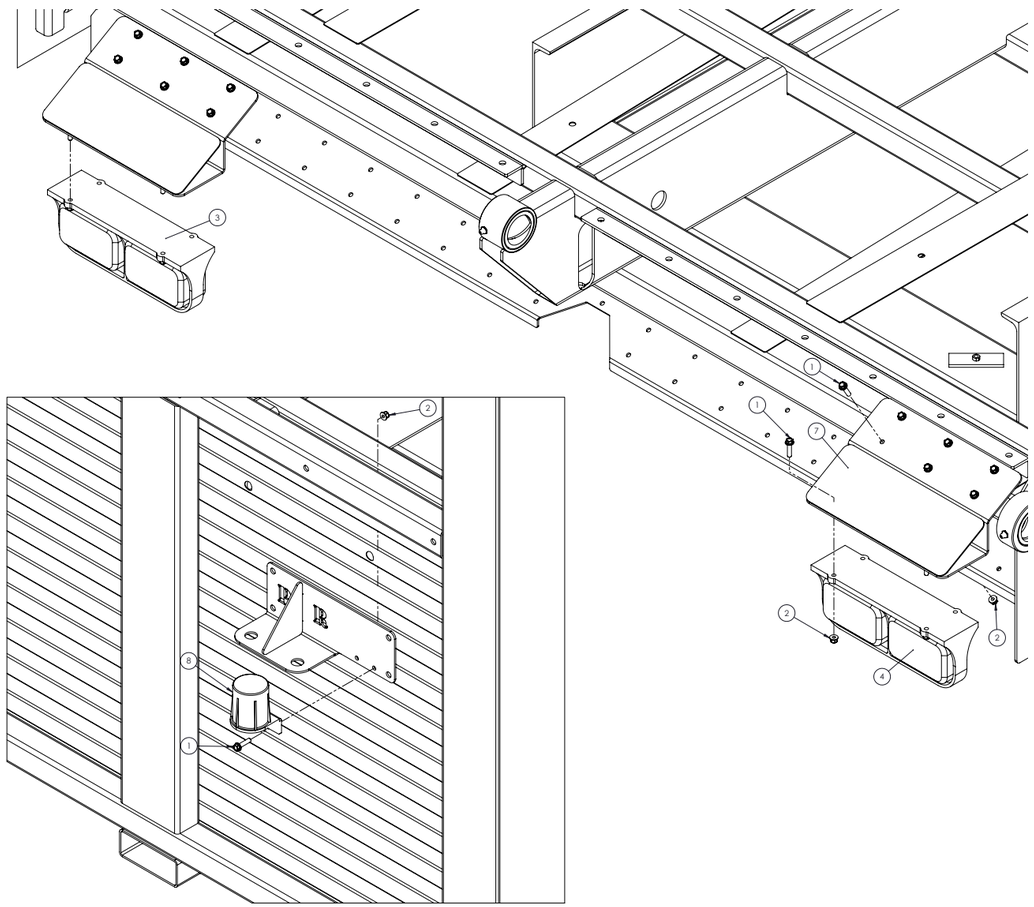

ITEM NO.	PART NUMBER	DESCRIPTION	QTY.
1	600020	BOLT, HFH 1/4-20 X 1.00"	22
2	600100	NUT, HFH NYLOC 1/4-20	22
3	642580	LIGHT, LED	1
4	642590	LIGHT, LED	1
5	710010	FRONT SHELL, REAR UNLOAD	1
6	710025	PANEL, CORRUGATED	1
7	710460	LIGHT BRACKET,	2
8	JPT1296	BRACKET, STORAGE HOLDER 7 POLE	1

ELECTRONICS DIAGRAM (INCAB COMBO/FRONT UNLOAD)

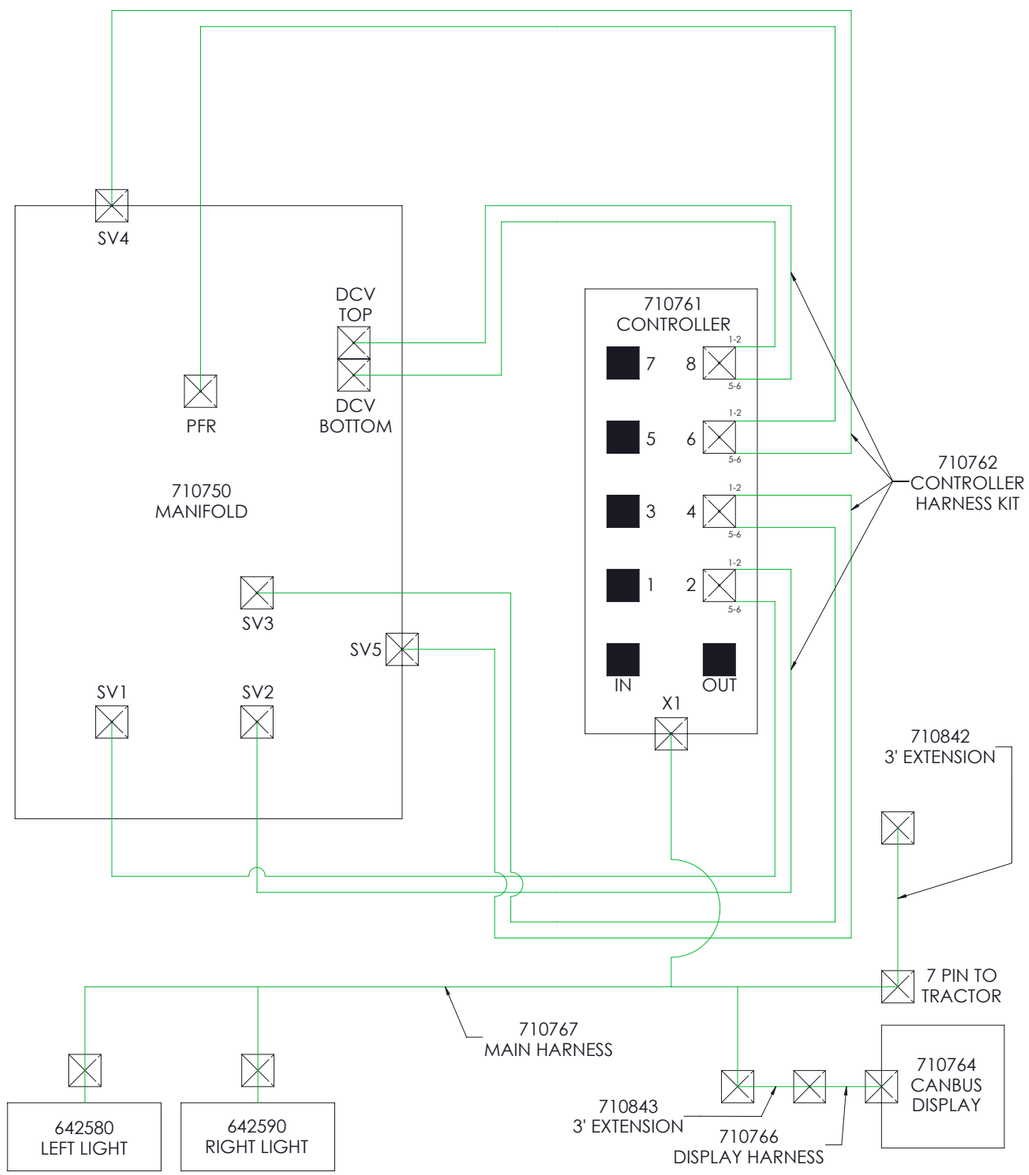

ELECTRONICS DIAGRAM (INCAB COMBO/FRONT UNLOAD W/ DUMP)

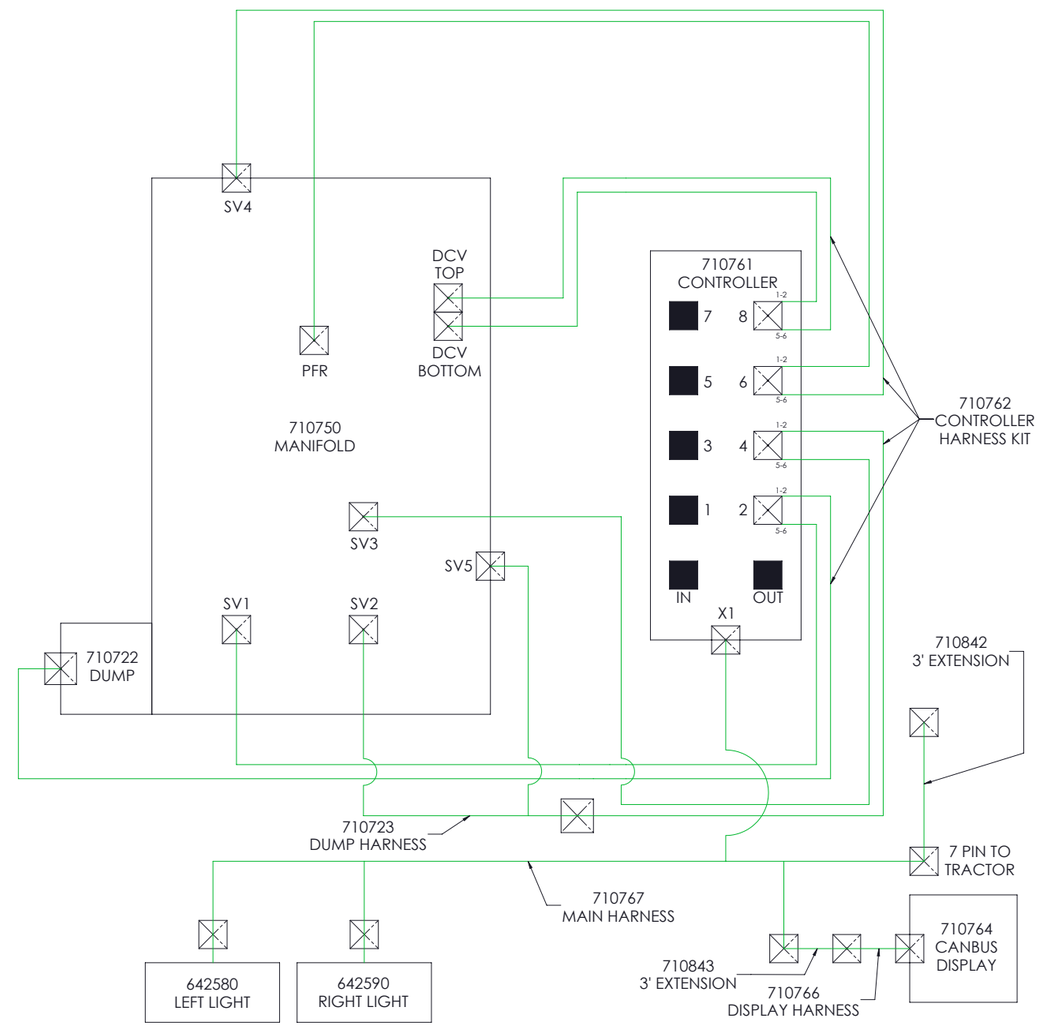

CONTROLLER HARNESS KIT

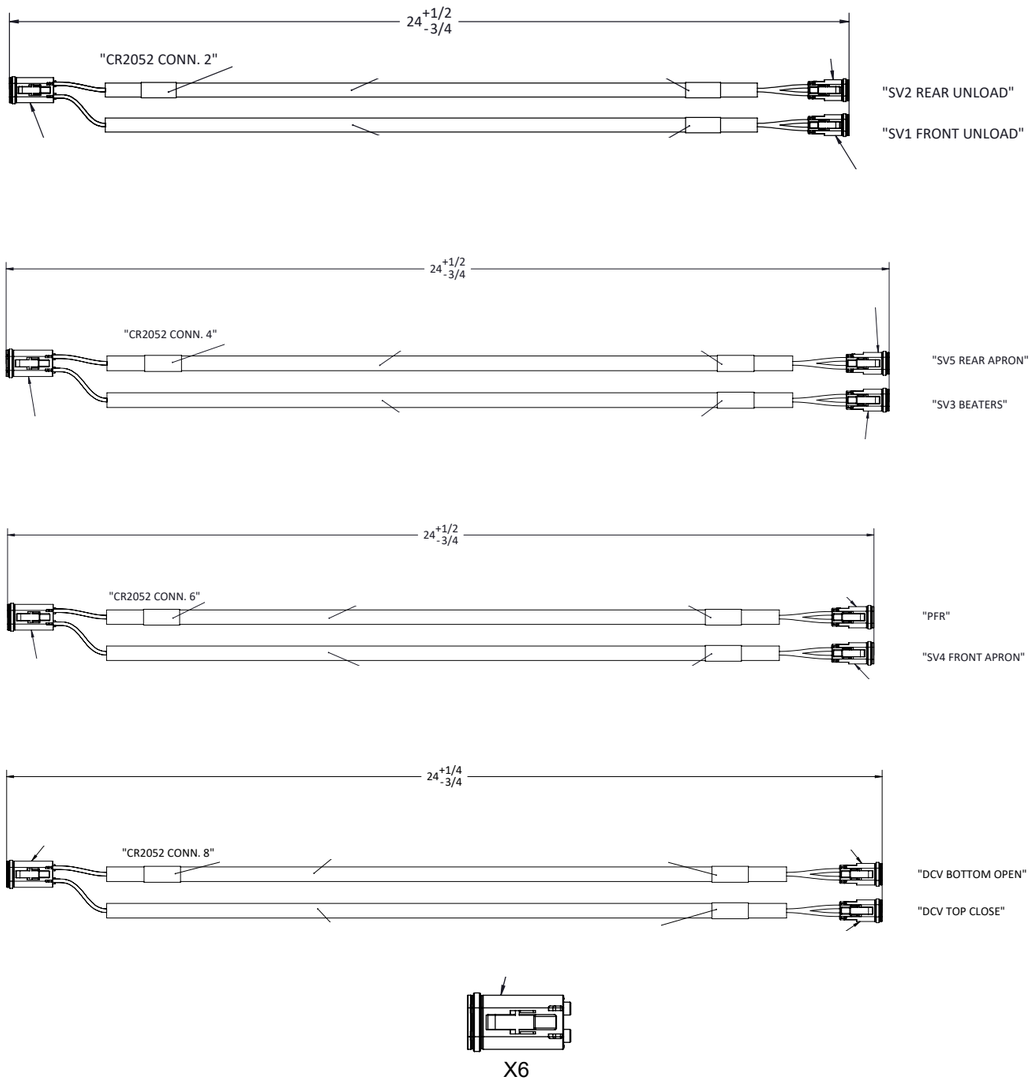

ELECTRONICS DIAGRAM (REAR UNLOAD)

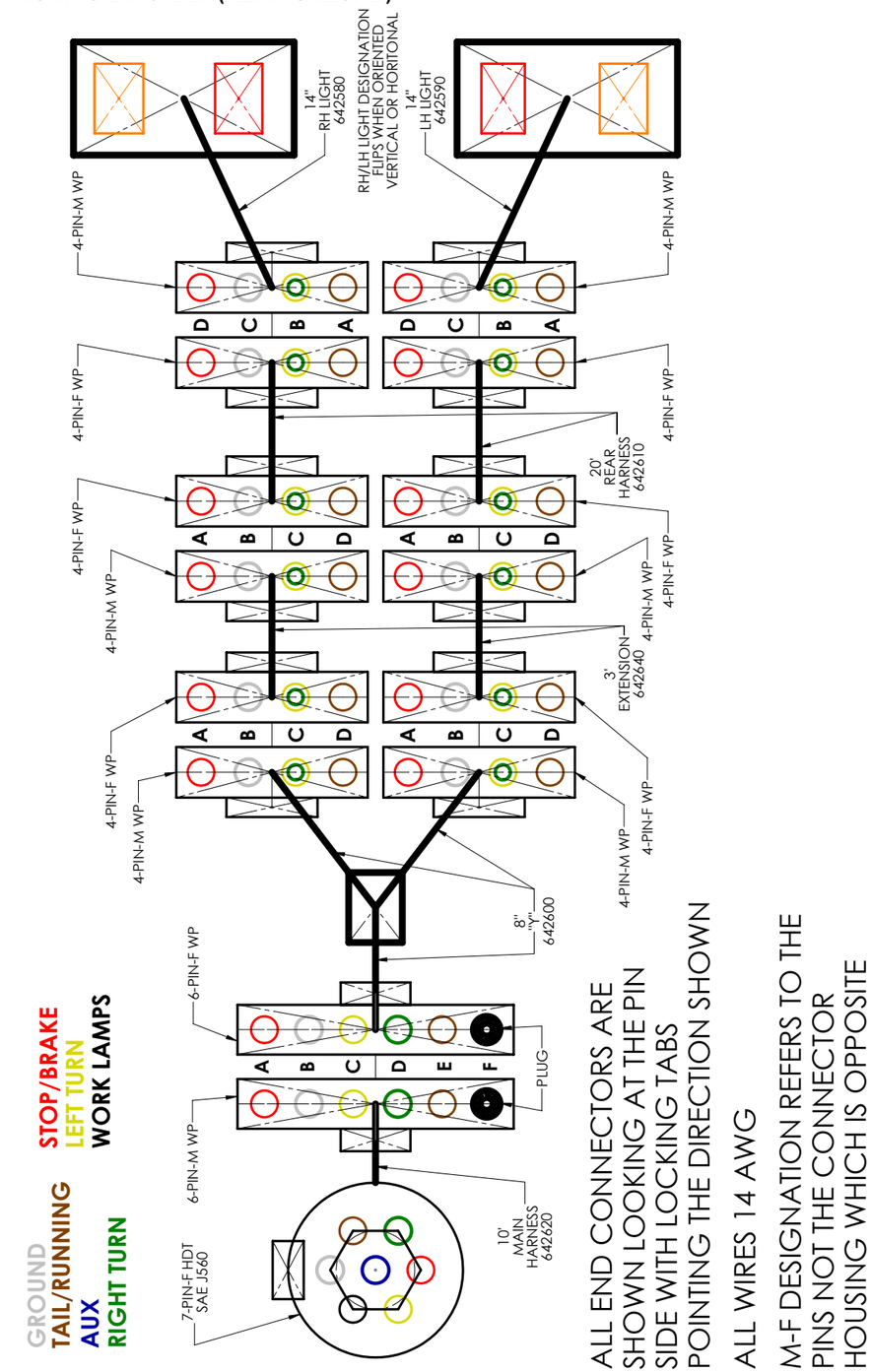

SHIELDS ASSEMBLY

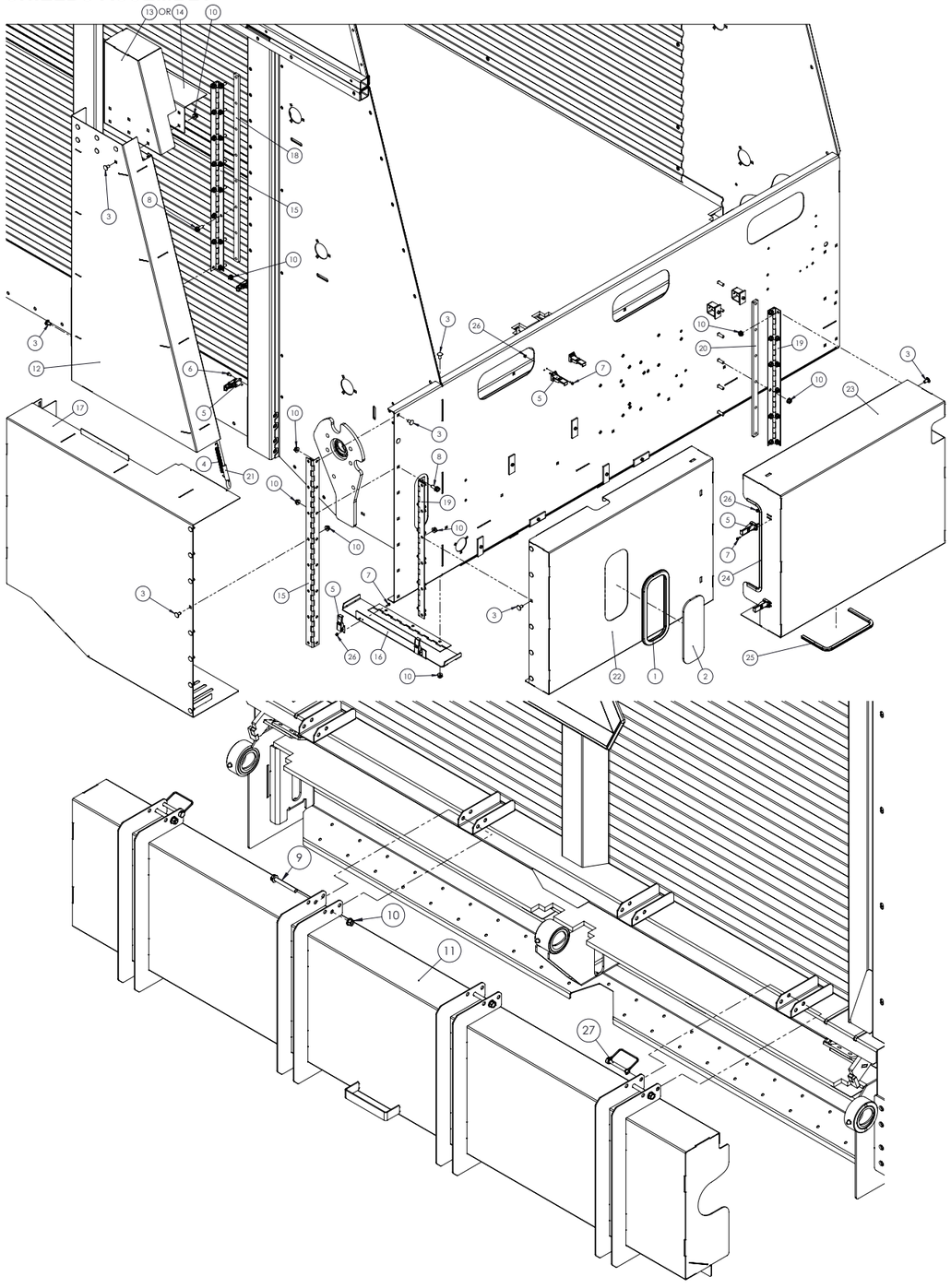

ITEM NO.	PART NUMBER	DESCRIPTION	QTY.
1	012020	RUBBER, WINDOW	1
2	012050	GLASS, 4.5 X 12.0	1
3	032840	BOLT, CRG 3/8-16 X 3/4	39
4	100750	SPRING, EXTENSION	1
5	163400	LATCH, TENSION 17L	10
6	205940	TEK 8-18 X 1/2 SELF DRILLING ZN	4
7	600015	BOLT, HFH #8-32 X 0.50"	16
8	600050	BOLT, HFH 3/8-16 X 1.00"	14
9	600080	BOLT, HFH 3/8-16	4
10	600120	NUT, HFH NYLOC 3/8-16	55
11	710450	REAR DRIVE SHIELD	1
12	710514	BEATER SHIELD	1
13	710520	4TH BEATER SHIELD WLDT	1
14	710523	BEATER SHIELD CAP	1
15	710524	SHIELD HINGE	2
16	710525	CLEAN OUT DOOR	1
17	710528	MAIN SHIELD WLDT	1
18	710533	HINGE SHIM	1
19	710543	SHIELD HINGE	2
20	710544	HINGE SHIM	1
21	710545	BEATER SHIELD PIN WLDT	1
22	710555	FRONT RIGHT SHIELD WLDT	1
23	710560	FRONT LEFT SHIELD WLDT	1
24	710586	SEAL, FRNT SHIELD CENTER	2
25	710588	SEAL, LH F SHIELD LOWER	1
26	710802	NUT, LOCK #8-32 NYLOCK	16
27	R18660	PIN, SNAPPER 5/16 X 2-3/4	2

DECALS (FRONT/COMBO)

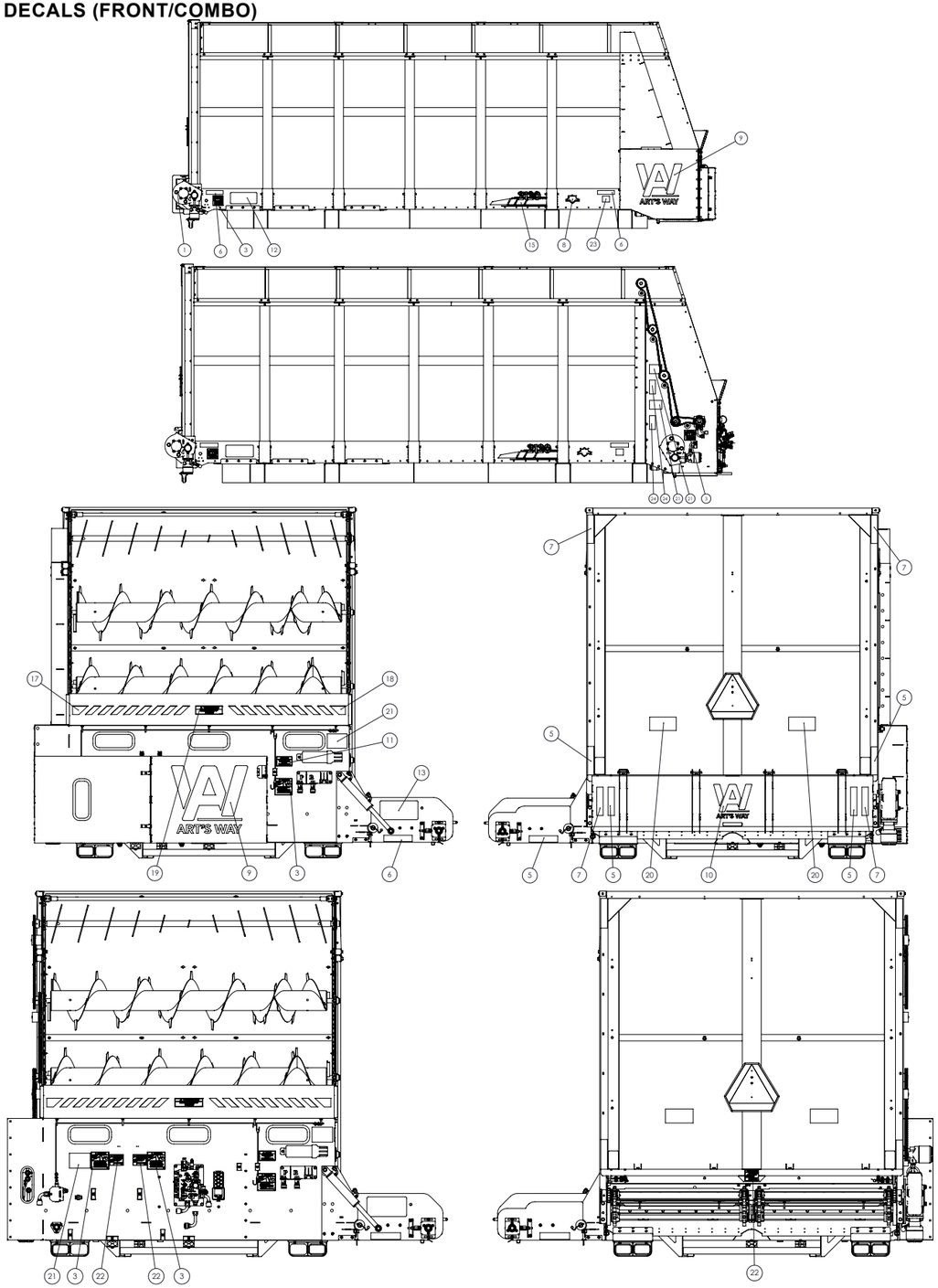

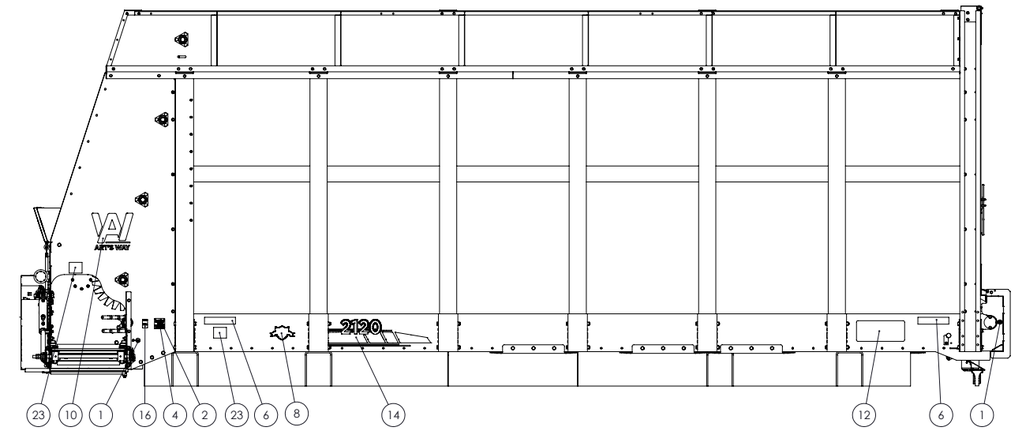

ITEM NO.	PART NUMBER	DESCRIPTION	QTY. (16')	QTY. (18')	QTY. (20')
1	146670	DECAL, GREASE SYMBOL	3	3	3
2	204510	NAIL, 1/4 GRIP	4	4	4
3	346310	DECAL, WARNING HIGH PRESSURE	5	5	5
4	355600	TAG, SERIAL NUMBER	1	1	1
5	476450	TAPE, RED RETROREFLECTIVE	5	5	5
6	476460	TAPE, YELLOW RETROREFLECTIVE	5	5	5
7	476470	TAPE, RED-ORANGE FLORESCENT	4	4	4
8	608085	DECAL, MADE IN AMERICA	2	2	2
9	720100	DECAL, NEW ARTS WAY LOGO	2	2	2
10	720110	DECAL, NEW ARTS WAY LOGO	2	2	2
11	720200	DECAL, NOTICE GPM/PSI	1	1	1
12	720205	DECAL, NOTICE	2	2	2
13	720210	DECAL, NOTICE	1	1	1
14	720500	DECAL, 2120 LH	-	-	1
	720510	DECAL, 2118 LH	-	1	-
	720520	DECAL, 2116 LH	1	-	-
15	720505	DECAL, 2120 RH	-	-	1
	720515	DECAL, 2118 RH	-	1	-
	720525	DECAL, 2116 RH	1	-	-
16	K18534203	DECAL, FEMA	1	1	1
17	MP01.77720	DECAL-SPILL PLATE RH	1	1	1
18	MP01.77730	DECAL-SPILL PLATE LH	1	1	1
19	MP01.77740	DECAL, WARNING	1	1	1
20	MP16.10552	DECAL, DANGER	2	2	2
21	MP16.20178	DECAL, WARNING	4	4	4
22	MP16.20179	DECAL, WARNING	5	5	5
23	MP16.20181	DECAL, WARNING	3	3	3
24	NH9611750	DECAL, WARNING	2	2	2
20' BOX SHOWN					

DECALS (REAR UNLOAD)

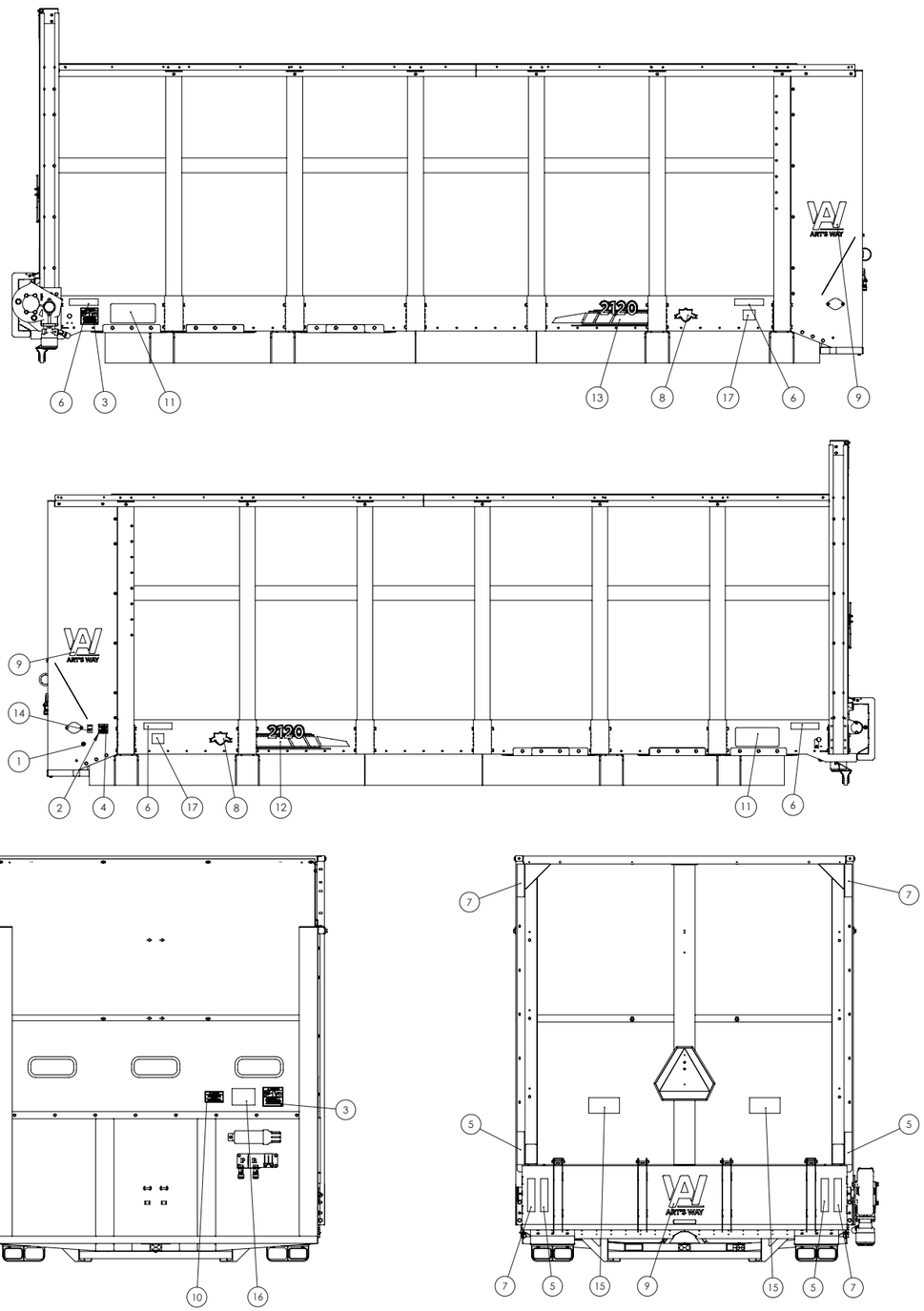

ITEM NO.	PART NUMBER	DESCRIPTION	QTY. (16')	QTY. (18')	QTY. (20')
1	146670	DECAL, GREASE SYMBOL	3	3	3
2	204510	NAIL, 1/4 GRIP	4	4	4
3	346310	DECAL, WARNING HIGH PRESSURE	2	2	2
4	355600	TAG, SERIAL NUMBER	1	1	1
5	476450	TAPE, RED RETROREFLECTIVE	4	4	4
6	476460	TAPE, YELLOW RETROREFLECTIVE	4	4	4
7	476470	TAPE, RED-ORANGE FLORESCENT	4	4	4
8	608085	DECAL, MADE IN AMERICA	2	2	2
9	720110	DECAL, NEW ARTS WAY LOGO	3	3	3
10	720200	DECAL, NOTICE GPM/PSI	1	1	1
11	720205	DECAL, NOTICE	2	2	2
12	720500	DECAL, 2120 LH	-	-	1
	720510	DECAL, 2118 LH	-	1	-
	720520	DECAL, 2116 LH	1	-	-
13	720505	DECAL, 2120 RH	-	-	1
	720515	DECAL, 2118 RH	-	1	-
	720525	DECAL, 2116 RH	1	-	-
14	K18534203	DECAL, FEMA	1	1	1
15	MP16.10552	DECAL, DANGER	2	2	2
16	MP16.20178	DECAL, WARNING	1	1	1
17	MP16.20181	DECAL, WARNING	2	2	2
20' BOX SHOWN					

DECALS (FARM NAME)

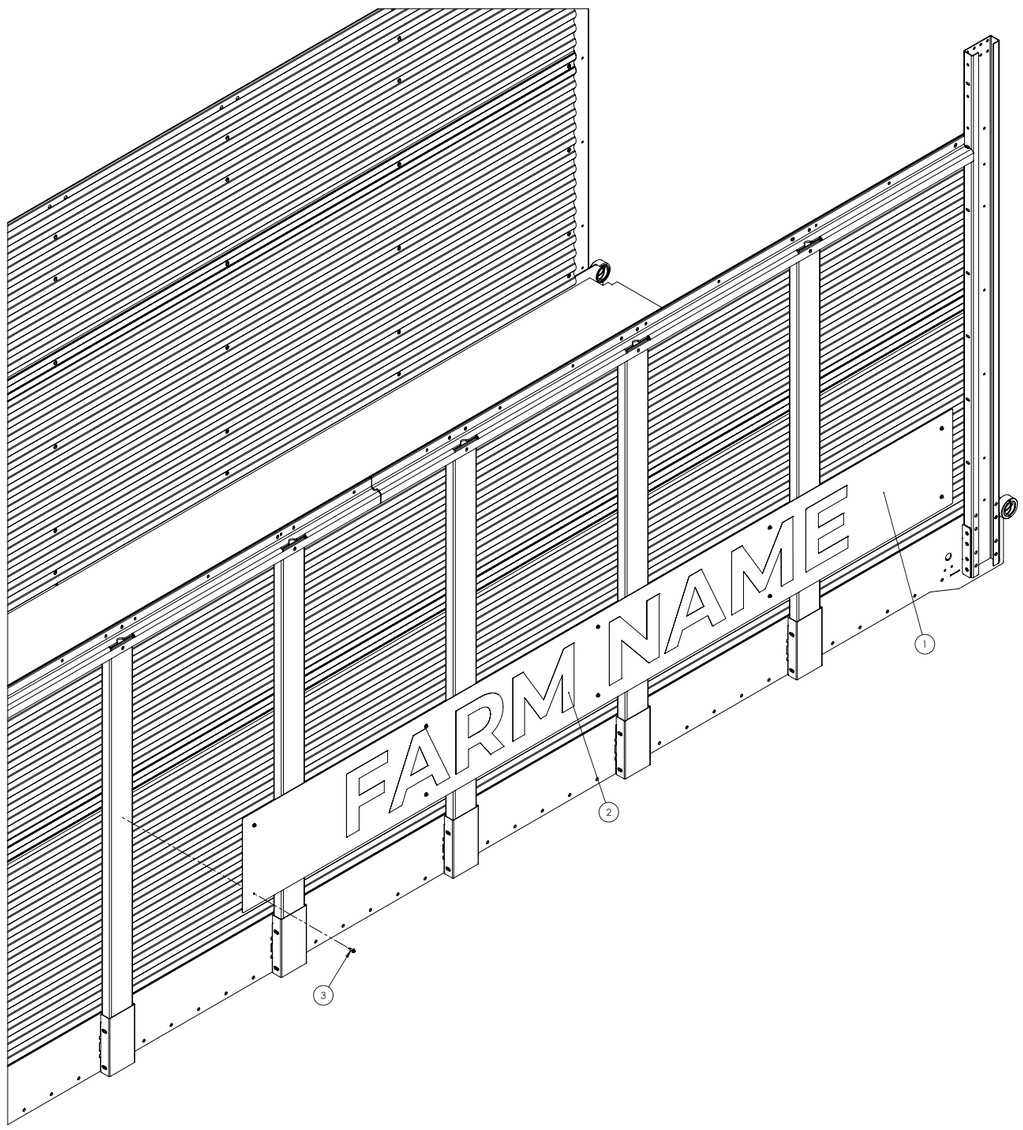

ITEM NO.	PART NUMBER	DESCRIPTION	QTY. (16’)	QTY. (18’)	QTY. (20’)
1	710480	NAME PLATE, 20'	-	-	2
	710481	NAME PLATE, 18’	-	2	-
	710482	NAME PLATE, 16’	2	-	-
2	720300	DECAL SET, ALPHABET,	2	2	2
3	MP907120	SCREW, TEK 1/4"	12	16	20
20’ BOX SHOWN					

NOTES:

NOTES:

NOTES:

NOTES:

Art’s-Way Manufacturing Co., Inc. TECHNICAL MANUALS

Manuals are available from your local dealer or Art’s-Way Manufacturing Co., Inc. for the operation, service, and repair of your machine. For prompt convenient service, contact your local dealer for assistance in obtaining the manuals for your machine.

Manuals are also available at www.artsway-ag.com free to download for your convenience.

Always give the Machine Name, Model, and Serial Number so your local dealer can provide the correct manuals for your machine.

Art’s-Way Manufacturing Co., Inc. reserves the right to make improvements in design or changes in specifications at any time without incurring any obligation to install them on units previously sold.

Except as expressly authorized, no part of this manual may be reproduced, copied, transmitted, or disseminated, in any storage medium, for any purpose without the express prior written consent of Art’s-Way Manufacturing Co., Inc.

ART’S-WAY MANUFACTURING CO., INC.

5556 HWY 9 WEST

Armstrong, IA. 50514 U.S.A.

WWW.ARTSWAY-AG.COM