50 BUSHEL
MANURE SPREADER

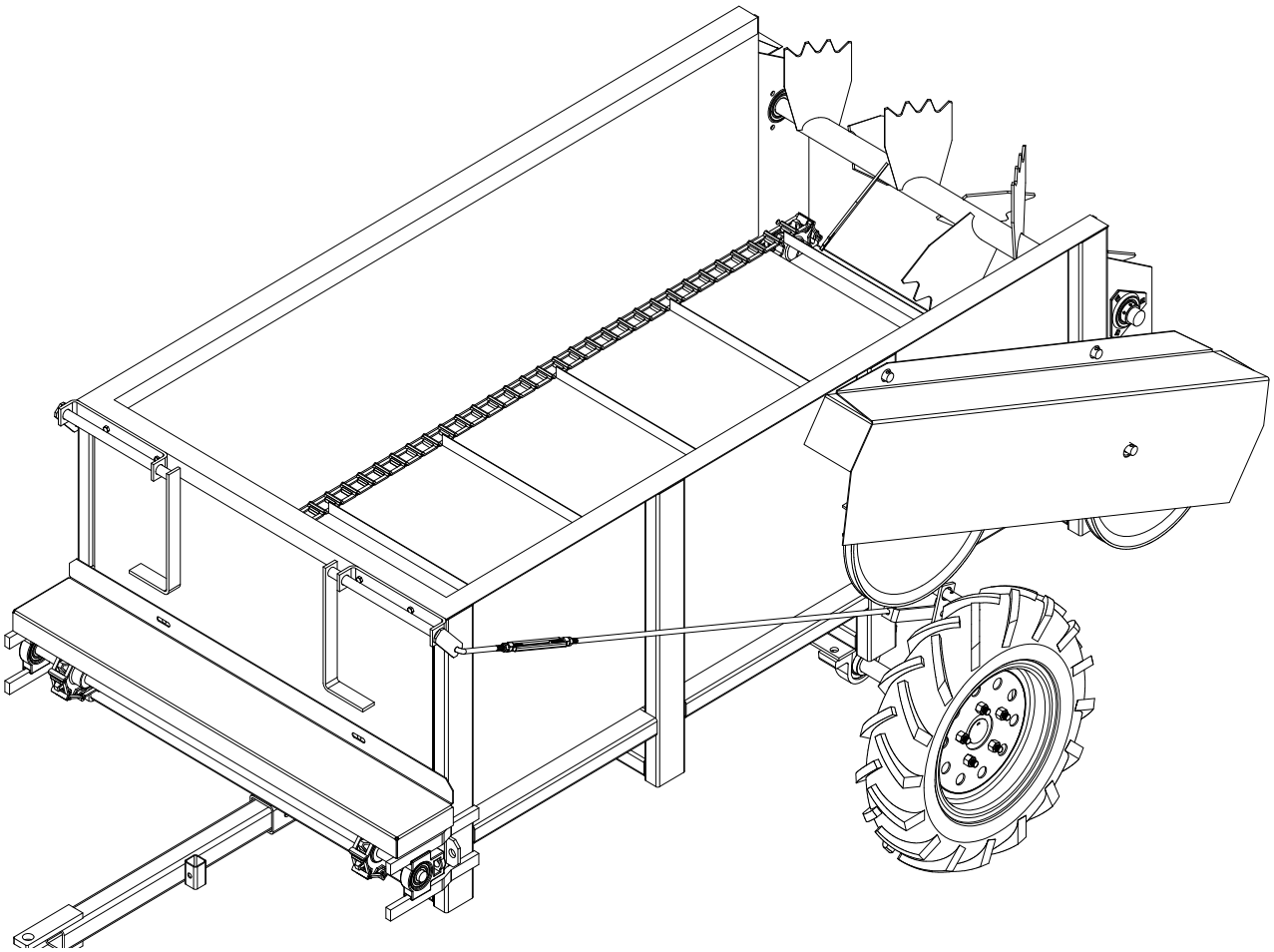

RODA MANUFACTURING
338 MAIN ST.
HULL, IA. 51239
712-439-2366
WWW.RODAMFG.COM

INTRODUCTION

Thank you for purchasing a Roda Spreader. We appreciate your business. Here at Roda, we do our best to provide you with a rugged and durable unit, which is easy to maintain. If you have any suggestions for any of our products, please let us know.

Roda Manufacturing Inc.

USING THIS MANUAL

This manual should be considered a permanent part of your machine, and should remain with the machine when you sell it.

This manual has been designed to help you become familiar with your unit. Before you operate your unit, be sure you understand and follow all the operation, safety, and lubrication instructions on the following pages in this manual. These have been written for your safety and convenience, and to help keep your unit running trouble-free for many years.

ADDITIONAL OPERATORS MANUALS, SERVICE PARTS LISTINGS and safety decals may be obtained through your dealer, or Roda Manufacturing.

TABLE OF CONTENTS

Introduction	3
Safety	4-6
Safety Decals & Location	7-8
Manure Spreader Safety	9-10
Pre-Operation	11
Inspection & Adjustments	12-13
Spreader Operation	13-14
Parts Breakdown	15
Parts List	16
Limited Warranty	17
Warranty Registration	18

SAFETY

UNDERSTAND SAFETY WORDS AND SYMBOLS

THIS SAFETY ALERT SYMBOL is used in this manual whenever personal safety is involved and means **ATTENTION! BECOME ALERT!** It stresses an attitude of **"HEADS UP"** for safety. Read and understand all pages in this manual that bear this safety symbol and…**TAKE TIME TO BE CAREFUL!**

The Signal Word or Message areas of all safety decals are color coded to indicate the level of hazard.

CAUTION: Is used to direct attention to unsafe practices, and uses the color yellow.

WARNING: Denotes a specific potential hazard, and uses the color yellow or orange.

DANGER: Denotes a most serious specific potential hazard, and uses the color red.

READ THE OPERATORS MANUAL

Any person who will be operating or maintaining this manure spreader should first read and understand this manual and all safety warnings on the unit.

This instruction manual should always be available to those responsible for the operation and maintenance of this manure spreader. It is the owner's responsibility to provide this safety information to his operators and employees.

Any person who does not understand the safety and operation instructions contained in this manual should not be considered qualified to operate this manure spreader.

FOLLOW SAFETY INSTRUCTIONS

Specialized procedures and instructions are required and must be adhered to when working on this equipment. Failure to follow the instructions contained in this manual could result in severe personal injury, death, and/or product or property damage. Personnel when operating or maintaining this equipment must use all applicable safety procedures such as OSHA requirements, regional and local safety codes and requirements, safe working practices, and good judgment.

SAFETY

OPERATING SAFETY PRECAUTIONS

WHEN THE SPREADER IS IN OPERATION, IT HAS MANY MOVING PARTS, WHICH COULD CAUSE SEVERE INJURY OR DEATH TO PERSONS COMING IN CONTACT WITH THESE PARTS. TO HELP AVOID SERIOUS ACCIDENTS, THE FOLLOWING GUIDELINES MUST BE FOLLOWED.

- **BE SURE ALL SAFETY SHIELDS** are in place before operating, including any truck and driveline shields. Exposed machinery, due to missing shielding, can cause severe injury or death. Repair or replace any damaged or missing shielding.

- **NEVER PUT ARMS OR FEET INSIDE UNIT,** or near discharge areas, nor climb on or in the spreader while it is running. NEVER allow anyone to position themselves over or near the top, or near the discharge area of the spreader while it is running. Rotating beaters, shafting, belts, pulleys, and sprockets can grab clothing or create pinch points, which can cause severe injury or death to the operator or bystanders. Always stop engine and remove ignition key so that the spreader cannot be accidentally turned on while inspection, servicing, repairing, or cleaning the spreader.

- **NEVER ATTEMPT TO RELEASE JAMMED MATERIALS OR CLEAN MATERIALS** from any area of the spreader of discharge without turning the spreader off first. Materials can hide moving parts and stopped parts can start unexpectedly, causing severe injury. Always stop engine and remove ignition key before attempting to remove jammed material or clean the spreader.

- **DO NOT ALLOW OPERATION OF THIS UNIT BY AN INEXPERIENCED OR UNQUALIFIED PERSON.** Keep all unqualified people away from spreader during operation. Operators of this unit must be alert and use good judgment at all times and must have fully read and understand this manual.

- **DO NOT WEAR LOOSE OR FLOPPY CLOTHING** while operating this unit. Loose clothing may become entangled in moving machinery.

- **BE SURE THE INSIDE OF SPREADER IS CLEAR** of any obstructions before loading.

- **SHOULD A PROBLEM OCCUR DURING THE OPERATION OF SPREADER, always turn off engine and remove ignition key before investigating problem.** If power source has not been turned off, the spreader may start unexpectedly, causing severe injury or death.

SAFETY

TRANSPORTING SAFETY PRECAUTIONS

WHEN TRANSPORTING A LOADED SPREADER, USE REDUCED SPEED AND BE SURE THE VEHICLE HAS ADEQUATE BRAKES TO STOP.

- **DO NOT ALLOW ANYONE TO RIDE ON OR INSIDE THE SPREADER.**
- **REDUCE SPEED WHEN TRAVELING** loaded and/or over rough, soft, or wet terrain. Exercise caution on side slopes and when turning corners.
- **AVOID OPERATING THE SPREADER CROSSING GULLIES OR DITCHES.**
- **WHEN WORKING ON SLOPES** or inclines, travel uphill or downhill. Keep the transmission in gear when going downhill.
- **AVOID DRIVING ON** loose fill, rocks, inclines, ditches, and holes.
- **ALWAYS PARK** the spreader on level ground and block the tires.
- **IF UNIT IS FOR HIGHWAY TRANSIT** the end user is responsible for federal, state and local vehicle safety regulation compliance (example: under ride requirements, lighting and weight limitations).

SAFETY

SAFETY DECALS

SAFETY DECALS ARE PLACED ON THIS UNIT FOR THE PROTECTION OF THE OPERATOR OR ANY PERSON NEAR THE UNIT.

- **BE SURE EVERYONE WHO OPERATES THE SPREADER UNDERSTANDS ALL THE INFORMATION, WARNING, CAUTION AND DANGER DECALS.**

- **KEEP THE DECALS CLEAN** so they are readable. This applies to all caution, warning, and danger decals.

- It is the **OWNER'S RESPONSIBILITY** to provide information for safe operation of this machine.

- **REPLACE ANY DAMAGED OR WORN DECAL.** Once any part of a decal becomes non-readable, it should be replaced. Replacement decals may be ordered through your dealer or Roda Manufacturing.

- **WHEN REPLACING DECALS,** be sure the surface area is clean and dry, peel the backing off the decal, and apply to the unit. Be sure to wipe with a clean cloth to rub out all air bubbles to assure a good seal. For best adhesion decals should be applied in temperatures of 50°(f) or warmer.

1.)

2.)

3.)

(SEE NEXT PAGE FOR PLACEMENT)

SAFETY

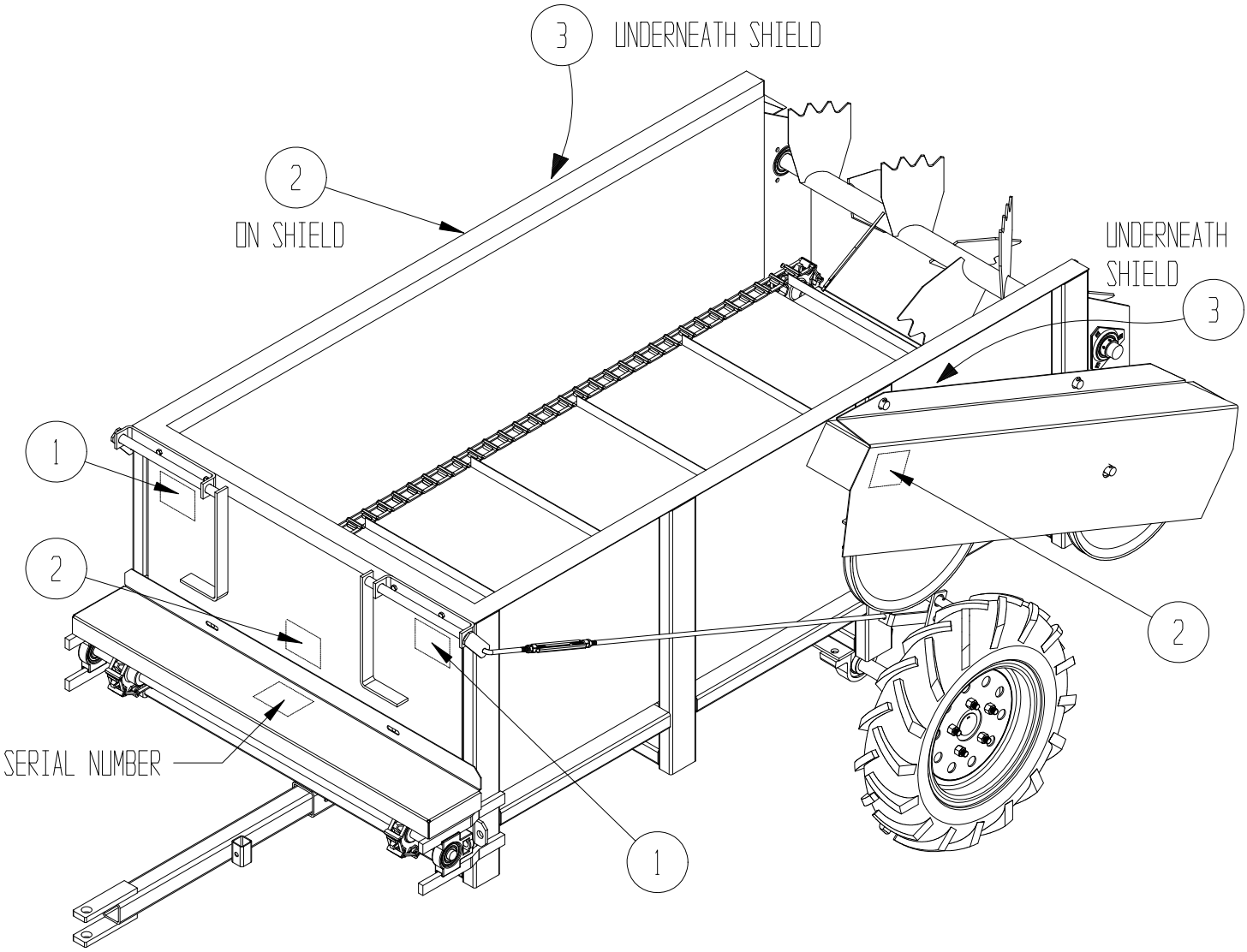

MODEL AND SERIAL NUMBER INFORMATION is located in the upper center area of the front apron shield. This is the number to give service personnel for parts and service questions.

MANURE SPREADER SAFETY

THERE ARE INHERENT HAZARDS ASSOCIATED WITH THE OPERATION OF A MANURE SPREADER. FOR YOUR SAFETY:

- **ONLY PROPERLY INSTRUCTED PEOPLE SHOULD OPERATE THE SPREADER**. Do not allow children or inexperienced persons to operate spreader.
- **KEEP ALL GUARDS AND SHEILDS IN PLACE**. Moving parts can crush and dismember.
- **CLEAR THE AREA** before equipment start up.
- **KEEP HANDS, FEET, AND LOOSE CLOTHING AWAY FROM ANY MOVING PARTS.**
- **DO NOT GO NEAR THE SPREADER WHILE THE MACHINE IS OPERATING**.
- **HIGHWAY TRAFFIC IS NOT TO EXCEED 10 MPH**. The tires supplied are for farm use only and are not designed for use above this speed.
- **USE ADEQUATE SAFETY CHAINS** when towing the spreader.
- **USE OF A SLOW MOVING VEHICLE SIGN IS REQUIRED** on all public roads. Obey all applicable highway safety laws and rules.
- **ALWAYS USE A TRACTOR LARGE ENOUGH TO PROVIDE SUFFICIENT BRAKING** assistance when towing a loaded spreader.
- **USE CAUTION WHEN TRAVELING** over uneven terrain and when approaching stops.
- **DO NOT LOAD THE SPREADER** unless it is hitched to the tractor.
- **DO NOT UNHITCH A LOADED SPREADER** from the tractor. Leaving it supported by only the jack.
- **PARK THE SPREADER ON LEVEL GROUND** and place blocks ahead of and behind the wheels before unhooking from tractor to avoid unexpected rolling when separated from vehicle
- **DO NOT ALLOW RIDERS ON THE SPREADER.**

FAILURE TO HEED MAY RESULT IN SERIOUS PERSONAL INJURY OR DEATH

THERE ARE ADDITIONAL HAZARDS ASSOCIATED WITH THE SERVICE AND MAINTENENCE OF YOUR SPREADER.

FOR YOUR SAFETY:

- **INSPECT** when first delivered and regularly thereafter; that all connections and bolts are tight and secure before operating.
- **RETIGHTEN ALL WHEEL BOLTS** after the first hour of towing. Check periodically thereafter.
- **MAINTAIN PROPER TIRE AIR PRESSURE** at all times.
- **ALWAYS WEAR EYE PROTECTION** when operating or servicing spreader.
- **BE SURE ALL MOVEMENT HAS STOPPED** and that the tractor is shut off before servicing the spreader or components.
- **NEVER MAKE ANY ALTERATIONS** or modifications to this equipment.

FAILURE TO HEED MAY RESULT IN SERIOUS PERSONAL INJURY OR DEATH

PRE-OPERATION

IMPORTANT: READ BEFORE OPERATING SPREADER.
IT IS THE RESPONSIBILITY OF THE OWNER TO MAKE SURE THE SPREADER IS SET UP PROPERLY. THE FOLLOWING RECOMMENDATIONS SHOULD BE HELPFUL.

- **CHECK FOR PROPER ASSEMBLY**, adjustment and lubrication. Check to be sure all bolts and set-screws are tight. Check to be sure that all belts and belt tighteners are properly adjusted. Review Operating Safety Precautions and Lubrication instructions for more information.
- **BE SURE ALL SHIELDS** are properly in place, including any drive-line shields
- **CHECK FOR AND REMOVE ANY FOREIGN OBJECTS** in the spreader box and discharge area.
- **BE SURE NO ONE IS NEAR THE SPREADER**.
- **TEST RUN THE SPREADER**.
- **WITH THE SPREADER EMPTY**, start the apron and beaters.
- **RUN FOR AT LEAST 5 MINUTES**.
- **CHECK TO MAKE SURE THE PROPER BELT TENSION IS BEING APPLIED**.
- **CHECK THE SPREADER DRIVE COMPONENTS TO BE SURE THEY ARE NOT ABNORMALLY HOT.**

If any of these items are not running as indicated, immediately repair or contact your service representative. Always refer to Operating Safety Precautions before operating or servicing the spreader.

INSPECTION & ADJUSTMENTS

ALWAYS STOP SPREADER, SHUT OFF VEHICLE ENGINE AND REMOVE IGNITION KEY BEFOR SERVICING, REPAIRING, OR CLEANING, USE SAFE SHOP PROCEDURES AND EXERCISE CAUTION WHEN WORKING ON THIS SPREADER!

- **SHIELDING** to be sure all shielding is in place and functioning properly. Replace all damaged or missing shielding immediately-Contact your nearest dealer or the Roda parts/service dept. for more information. Check bolts and Set Screws after a few hours of use and each month thereafter, and tighten if necessary.

- **AFTER A FEW HOURS OF INITIAL OPERATION,** check all bolts and set screws to be sure they are tight and secure.

- **DRIVE BELTS FOR WEAR**, proper alignment and tension, and adjust or replace if necessary.

- **SAFETY DECALS FOR READABILITY**. If any safety decals are removed, obstructed, or otherwise not understandable, they should be replaced immediately. Keep all decals clean!

- **IMPORTANT: IF YOU WELD ON THIS UNIT:** Do Not allow the currents to flow through the bearings. Ground directly to the item being welded.

- **PERIODICALLY CHECK** all set screws and bolts and retighten if necessary.

- **APRON CHAINS** for wear, proper alignment and tension, according to the adjustment guidelines as shown.

- **BE SURE TO KEEP PROPER TENSION ON APRON CHAINS.** The (2) apron tightener bolts are located at the front of the unit at each end of the apron shaft. They should be adjusted evenly for their respective assembly as shown below:

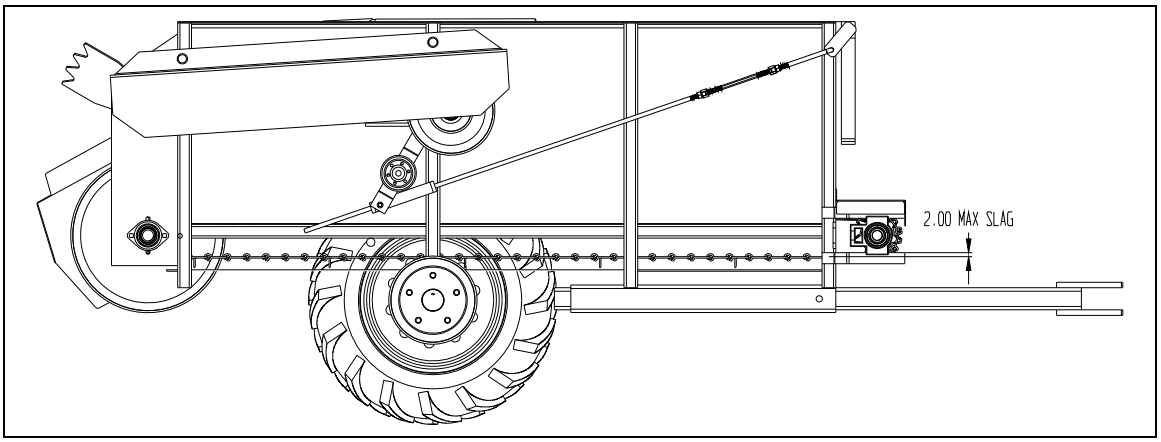

If apron is loose, remove one link from each side of that apron chain assembly and readjust to tension as shown. **CAUTION:** Over tightening can cause premature failure of the drive components.

SPREADER OPERATION

ALWAYS REFER TO THE OPERATING SAFETY PRECAUTIONS AND SAFETY DECAL SECTIONS OF THIS MANUAL BEFORE OPERATING THIS SPREADER

LOADING

- **BEFORE LOADING THE SPREADER**, be sure there are no obstructions in the beaters or discharge opening. Inspect the spreader to see that it is in good mechanical condition and that all shields are in place and functional.

- **NEVER CHECK THE SPREADER WHILE IT IS OPERATING**

- **IN FREEZING WEATHER,** make sure the apron is not frozen with manure. If this appears likely, turn off vehicle engine, remove ignition keys, loosen the frozen area and operate before loading.

- **AVOID LOADING ROCKS AND OTHER SOLID OBJECTS INTO THE SPREADER**

- **NEVER COVER BEATERS** when loading, beaters should spin freely before engaging.

OPERATION

- **BEFORE OPERATING, BE SURE NO ONE IS NEAR THE SPREADER AND THAT THE DISCHARGE AREA IS CLEAR OF ALL OBJECTS OR PERSONS THAT COULD BE HARMED IF MATERIAL WAS DISCHARGED!**

- **WITH THE VEHICLE STOPPED** and the engine throttled down, engage the apron and beater levers.

- **START VEHICLE IN MOTION.**

- **THE SPREAD RATE IS CONTROLLED BY THE VEHICLE GROUND SPEED**. The type of material being spread affects the rate at which material is discharged from the spreader. Semi-liquid materials will discharge faster then the more solid type materials.

- **WHEN THE SPREADER IS EMPTY DURING FREEZING TEMPERATURES**, be sure that the spreader is cleaned out to prevent the apron from freezing down.

- **IF THE BEATER QUITS TURNING**, stop the vehicle, turn off the motor and check the drive belt tension.

- **NEVER LOAD THE SPREADER SO THE LOAD IS ON THE BEATERS**.

  *If a problem should occur while unloading the spreader, or if you want to clean off the spreader after it is empty, NEVER leave the VEHICLE without first turning off the engine and removing ignition key.

PARTS BREAKDOWN

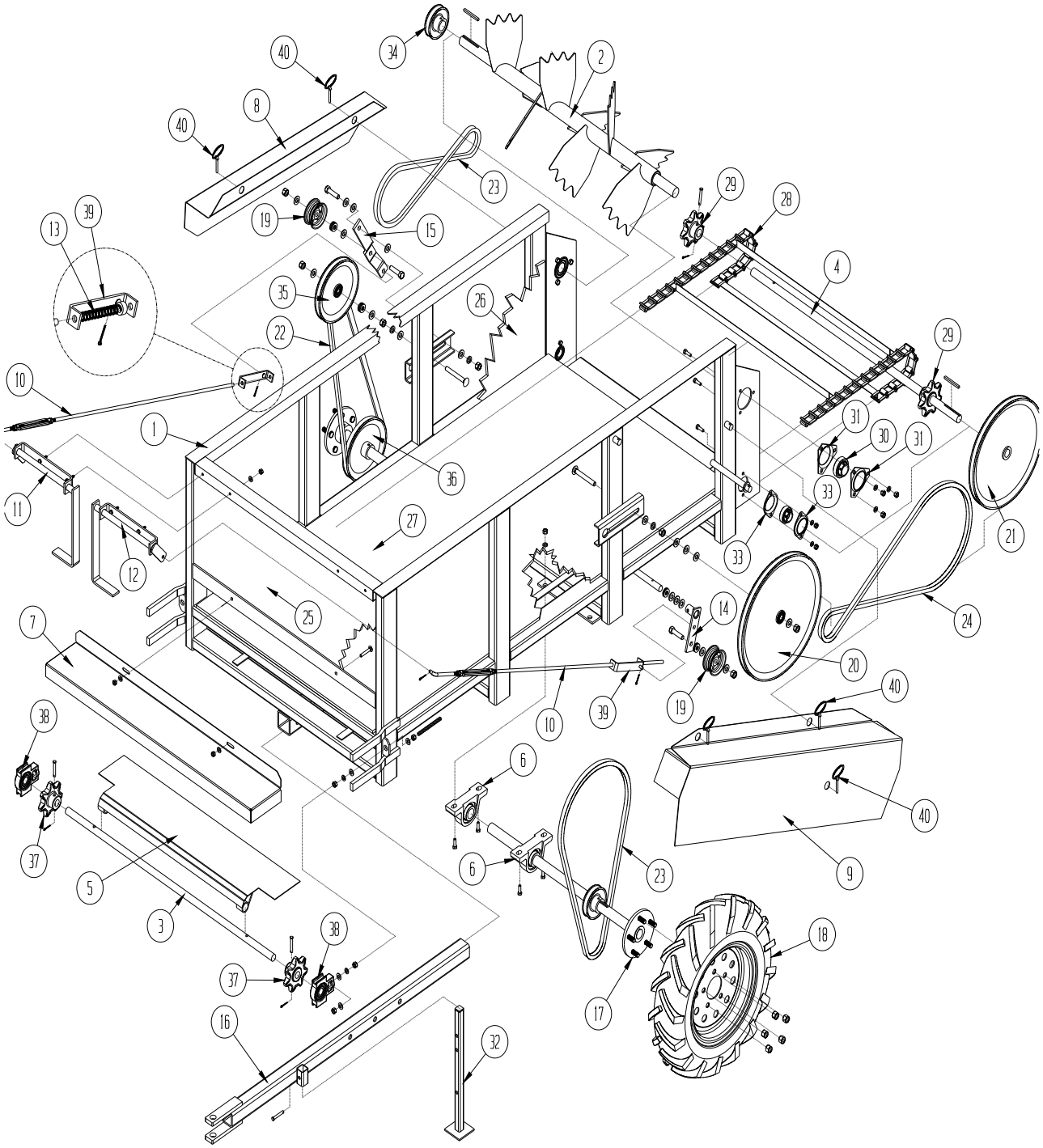

PARTS LIST

PARTS LIST			
REF #	PART #		QTY
1	50001	MAIN FRAME	1
2	50002	BEATERS	1
3	50003	7/8" APRON SHAFT	1
4	50004	1" APRON DRIVE SHAFT	1
5	50005	FRONT SHAFT COVER	1
6	NAP207-20	1.25” AXLE BEARING	2
7	50007	FRONT WEBB SHIELD	1
8	25008	BEATER DRIVE SHIELD	1
9	50009	APRON DRIVE SHIELD	1
10	50010	ROD TIGHTENER ASSY	2
11	25011	RIGHT HANDLE ASSY	1
12	25012	LEFT HANDLE ASSY	1
13	CS-4	ROD SPRINGS	2
14	25014	APRON PULLEY BRKT	1
15	25015 25015-B	BEATER PULLEY BRKT (CHANGED 1-1-05)	1
16	25016	TONGUE	1
17	50017	AXLE	2
-	WN-50	(LUG NUT ONLY)	-
18	50015	TIRE & RIM	2
-	50015-01	(TIRE ONLY)	-
-	50015-02	(RIM ONLY)	-
19	011-4408	3" FLAT IDLER PULLEY	2
20	25022	16" & 4" PULLEY ASSY	1
21	25023	14" PULLEY W/ 1" HUB	1
22	B-53	53" V-BELT	1
23	B-66	66" V-BELT	2
24	B-81	81" V-BELT	1
25	50011	POLY FRONT PANEL	1
26	50012	POLY SIDE PANEL	2
27	50013	POLY FLOOR PANEL	1
28	50014	APRON CHAIN ASSY	1
29	100-R36P	APRON SPRKT W/ 1" BORE	2
30	SB206-20	1-1/4" SEALED BEARINGS	2
31	PFT-206	1-1/4" 3-HOLE FLANGETTES	4
32	25033	JACK STAND	1
33	PFL-205	1" 2 HOLE FLANGETTES	4
34	25035	4" PULLEY W/ 1-1/4" BORE	2
35	25036	8" & 4" PULLEY ASSY	1
36	50016	8" PULLEY W/ 1-1/4" BORE	1
37	225-R36	APRON SPRKT W/ 7/8" BORE	2
38	UTC205-14	7/8" TIGHTENER BEARING	2
39	25040	APRON ROD PULLEY BRKT	1
40	LP-25-1.75	1/4" LYNCH PIN	4

PARTS LIST			
REF #	PART #	DESCRIPTION	QTY
41	LW-31	5/16 LOCK WASHER	14
42	LW-38	3/8" LOCK WASHER	20
43	LW-50	1/2" LOCK WASHER	12
44	FW-31	5/16" FLAT WASHER	14
45	FW-50	1/2" FLAT WASHER	12
46	HN-31	5/16" HEX NUTS	14
47	HN-38	3/8" HEX NUT	20
48	HN-50	1/2" HEX NUT	8
49	LN-50	1/2" NYLON LOCK NUT	5
50	CH-31-1.25	5/16" X 1-1/4" CARRIAGE BOLT	4
51	CH-31-2	5/16" X 2" CARRIAGE BOLT	6
52	CH-50-4	1/2" X 4" CARRIAGE BOLT	2
53	50014-01	APRON CROSS BAR	18
54	25040-B	BEATER ROD PULLEY BRKT	1
55	SB205-16	1” SEALED BEARING	2
56			
57			
58			
59			
60			
61			
62			
63			
64			
65			
66			
67			
68			
69			
70			
71			
72			
73			

MINI SPREADER SLOP GATE KIT

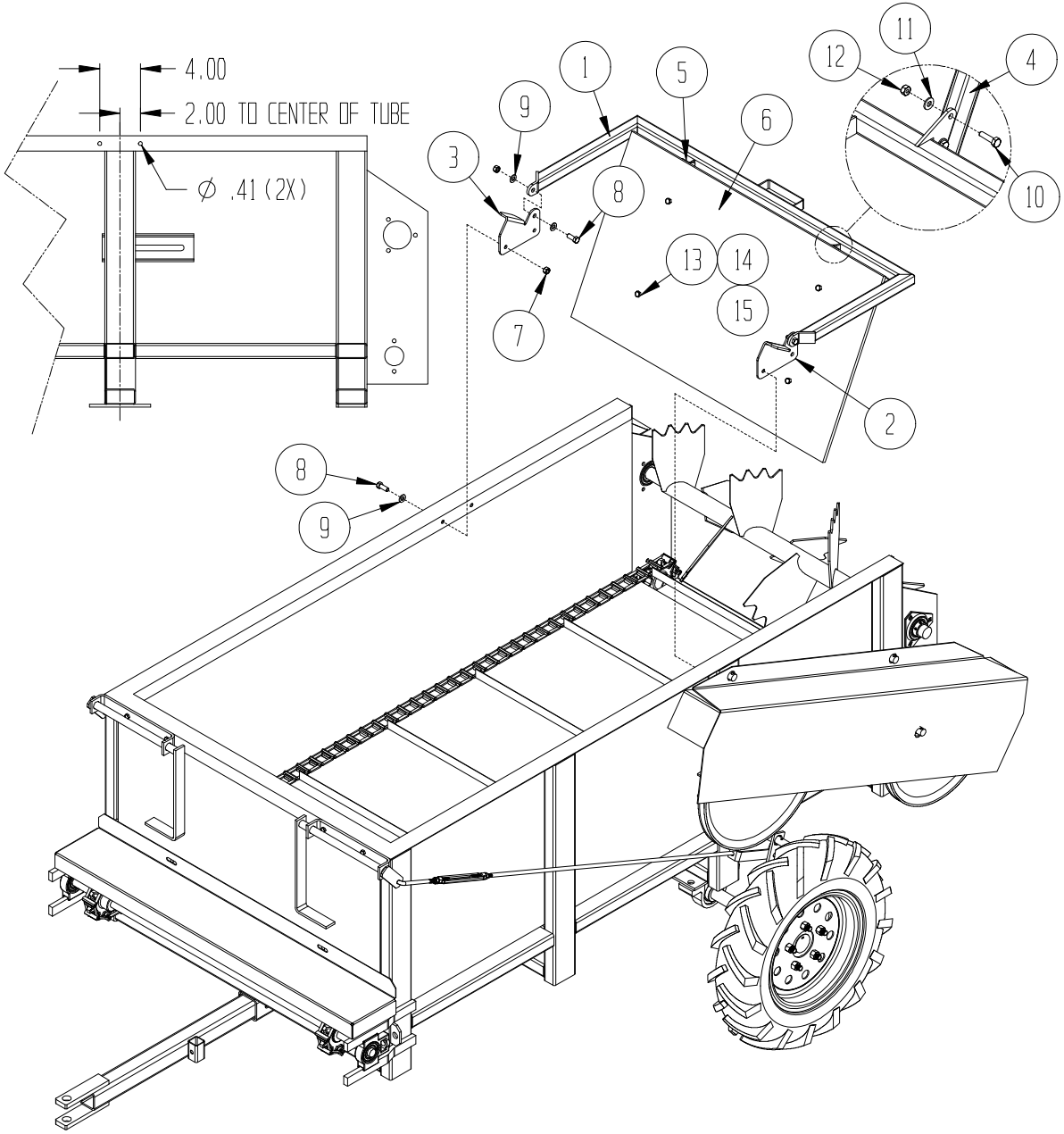

ITEM	PART #	DESCRIPTION	QTY
1	50024	50 BUSHEL SLOP GATE ARMS	1
	25045	25 BUSHEL SLOP GATE ARMS	-
2	50025	LEFT PIVOT BRACKET	1
3	50026	RIGHT PIVOT BRACKET	1
4	50027	LEFT 50 BUSHEL ANGLE MOUNT	1
	25046	LEFT 25 BUSHEL ANGLE MOUNT	-
5	50028	RIGHT 50 BUSHEL ANGLE MOUNT	1
	25047	RIGHT 25 BUSHEL ANGLE MOUNT	-
6	50029	50 BUSHEL PLASTIC	1
	25048	25 BUSHEL PLASTIC	-
7	HDW-246	.38 NYLON LOCKNUT	6
8	HDW-205	.38 X 1.25 HEX HEAD BOLT	6
9	HDW-257	.38 FLAT WASHER	8
10	HDW-266	.25 X .75 HEX HEAD BOLT	4
11	HDW-137	.25 LOCK WASHER	4
12	HDW-236	.25 HEX NUT	4
13	HDW-174	.31 X 1.25 CARRIAGE BOLT	4
14	HDW-138	.31 LOCK WASHER	4
15	HDW-237	.31 HEX NUT	4

RODA LIMITED WARRANTY

Roda Manufacturing Incorporation warrants, in accordance with the provisions below, to the original purchaser for the period of (12) months from the date of delivery of a Roda machine that the machine is free from defects in material or workmanship. Roda's obligation under this warranty is to repair or replace, at Roda's election, without charge and at the place of business of a dealer authorized to handle Roda machinery, any part or parts of the machine which, in the judgment of Roda, prove to be defective.

THIS WARRANTY AND RODAS OBLIGATION HEREUNDER IS IN LIEU OF ALL OTHER WARRANTIES, EXPRESSED OR IMPLIED, INCLUDING, WITHOUT LIMITATION, THE IMPLIED WARRANTY OF MERCHANTABILITY OR IMPLIED WARRANTY OF FITNESS FOR PARTICULAR PURPOSE, and all other obligations or liabilities of Roda for incidental and consequential damages resulting from the design, manufacture, sale or use of the machine. No person is authorized to make any warranty or assume for Roda any liability not strictly in accordance with this warranty.

This warranty shall not apply to any machine or machine part which, in the judgment of Roda, has been altered or tampered with in any way or has been subjected to misuse, abuse, neglect or accident, or has had the serial numbers altered, effaced or removed. This warranty does not apply to batteries, tire and tubes, or other component parts not manufactured by Roda, except to the extent of their individual manufacturer's guarantees. Any and all such parts must be returned to the original manufacturer for warranty adjustment.

Roda Manufacturing Incorporation reserves the right to make improvements or changes when it becomes practical and possible to do so, without incurring any obligations to make changes or additions to the equipment sold previously.

WARRANTY REGISTRATION SHEET

MODEL NUMBER _____ SERIAL NUMBER _____

DATE OF SALE _____

CUSTOMER _____ DEALER _____

ADDRESS _____ ADDRESS _____

CITY _____ CITY _____

STATE _____ ZIP _____ STATE _____ ZIP _____

This is to acknowledge that I am the new owner of the following RODA Machine, that I agree to read the Operators manual and become familiar with the safe operation of this unit.

_____R25 _____R50 _____R210 _____R410 _____R610 _____RF812 _____RF912
_____R716 _____R720 _____R716F _____R720F _____R716C _____R720C

Roda Manufacturing Incorporation warrants, in accordance with the provisions below, to the original purchaser for the period of (12) months from the date of delivery of a Roda machine that the machine is free from defects in material or workmanship. Roda's obligation under this warranty is to repair or replace, at Roda's election, without charge and at the place of business of a dealer authorized to handle Roda machinery, any part or parts of the machine which, in the judgment of Roda, prove to be defective.

THIS WARRANTY AND RODAS OBLIGATION HEREUNDER IS IN LIEU OF ALL OTHER WARRANTIES, EXPRESSED OR IMPLIED, INCLUDING, WITHOUT LIMITATION, THE IMPLIED WARRANTY OF MERCHANTABILITY OR IMPLIED WARRANTY OF FITNESS FOR PARTICULAR PURPOSE, and all other obligations or liabilities of Roda for incidental and consequential damages resulting from the design, manufacture, sale or use of the machine. No person is authorized to make any warranty or assume for Roda any liability not strictly in accordance with this warranty.

This warranty shall not apply to any machine or machine part which, in the judgment of Roda, has been altered or tampered with in any way or has been subjected to misuse, abuse, neglect or accident, or has had the serial numbers altered, effaced or removed. This warranty does not apply to batteries, tire and tubes, or other component parts not manufactured by Roda, except to the extent of their individual manufacturer's guarantees. Any and all such parts must be returned to the original manufacturer for warranty adjustment.

Roda Manufacturing Incorporation reserves the right to make improvements or changes when it becomes practical and possible to do so, without incurring any obligations to make changes or additions to the equipment sold previously.

SIGNED _____

DATE _____

This Registration form <u>Must</u> be returned to enact this warranty.