# MILLER PRO

# ROTARY RAKE

## *PARTS BOOK*

## MODEL 900

**17.00668E**

This parts book is furnished for your convenience only. All parts must be purchased through an authorized dealer. Call us for a dealer near you.

MILLER
St. Nazianz

P O Box 127
511 East Main St.
St. Nazianz, WI 54232
(920) 773-2121

Issue Date: 3/07

MILLER PRO

*900 Rotary Rake*

# Contents


Page

**Lower Frame** ..... **2**
Lower Frame Parts List ..... 3
**Upper Frame And Hitch** ..... **4**
Upper Frame And Hitch Parts List ..... 5
**Tandem Axle, Wheels And Tires** ..... **6**
Tandem Axle, Wheels And Tires Parts List ..... 7
**Tandem Stops** ..... **8**
Tandem Stops Parts List ..... 9
**Wheel And Tire** ..... **10**
Wheel And Tire Parts List ..... 11
**Guards** ..... **12**
Guards Parts List ..... 13
**Swath Screen** ..... **14**
Swath Screen Parts List ..... 15
**Tine Arms** ..... **16**
Tine Arms Parts List ..... 17
**Lift Hydraulics** ..... **18**
Lift Hydraulics Parts List ..... 19
**Decals** ..... **20**
Decals Parts List ..... 21
**Gear Box** ..... **22**
Gear Box Parts List ..... 23
**PTO Driveline (Prior To S/N 17.20289)** ..... **24**
PTO Driveline Parts List (Prior To S/N 17.20289) ..... 25
**Radial Pin Clutch (Prior To S/N 17.20289)** ..... **26**
Radial Pin Clutch Parts List (Prior To S/N 17.20289) ..... 27
**PTO Shaft (S/N 17.20289 & After)** ..... **28**
PTO Shaft Parts List (S/N 17.20289 & After) ..... 29
**2-1/2" x 6" Cylinder w/Set Screw Rod Clevis** ..... **30**
2-1/2" x 6" Cylinder w/Set Screw Rod Clevis Parts List ..... 31
**Jack** ..... **32**
Jack Parts List ..... 33
**Part Number Index** ..... **34**

# Lower Frame

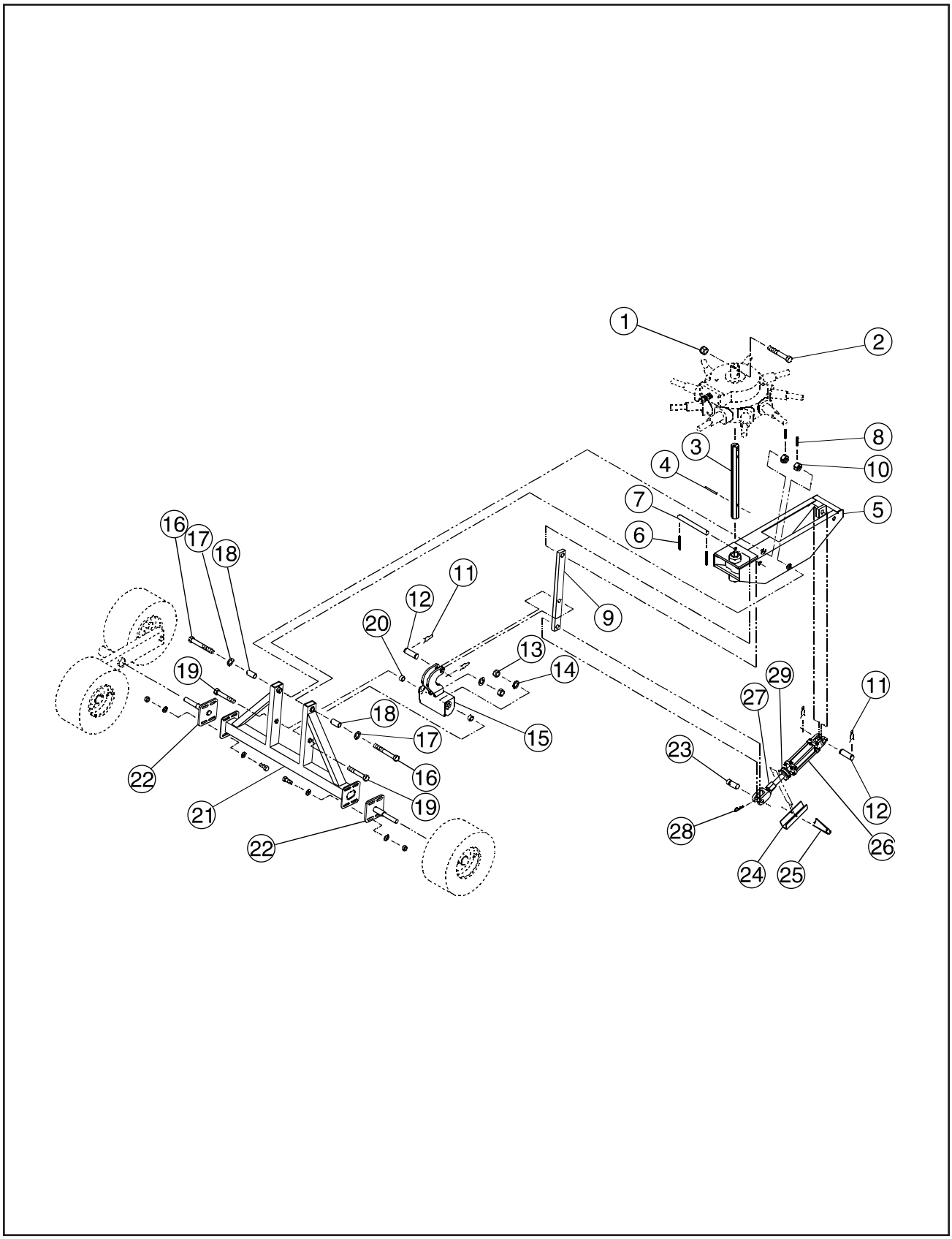

MILLER PRO

# Lower Frame Parts List

| Item | Part No. | Quantity | Description |
|---|---|---|---|
| 1 | 906402 | 1 | Nut, Hex Lock, 5/8-11, Nylon Insert |
| 2 | 904635 | 1 | Bolt, Hex Head, 5/8-11 x 3-1/2 |
| 3 | 17.00223 | 1 | Shaft, Center Frame |
| | 17.00049 | 6 | Plug, 1/16 PTF - SAE, Short |
| 4 | 09.72008 | 1 | Pin, Spiral, 5/8 x 3 x 3-1/2 HD |
| 5 | 17.00967.1 | 1 | Center Frame w/Decals |
| | | | (Includes Items 3 thru 5 & (6) 1/16 PTF Pipe Plugs) |
| 6 | 09.72003 | 2 | Pin, Roll, 3/16 x 2 |
| 7 | 17.00058 | 1 | Pin, Pivot |
| 8 | 900530 | 2 | Pin, Cotter, 1/8 x 1-1/4 |
| 9 | 17.00905.7 | 1 | Link, Lift w/Bushing |
| | 21.00139 | 1 | Bushing |
| 10 | 901319 | 2 | Nut, Hex Slotted, 3/4-16 |
| 11 | 09.73502 | 4 | Pin, Hair, External, 1" Pin |
| 12 | 09.73603 | 2 | Pin, Pivot |
| 13 | 906349 | 2 | Nut, Hex Lock, 3/4-10, Nylon Insert |
| 14 | 903061 | 2 | Washer, Flat, 3/4 SAE |
| 15 | 17.00215.7 | 1 | Lift Bracket Weldment |
| 16 | 17.00906 | 2 | Bolt, Pivot |
| 17 | 900499 | 2 | Washer, Flat, 3/4 |
| 18 | 17.00231 | 2 | Bushing |
| 19 | 904261 | 2 | Bolt, Hex Head, 3/4-10 x 3-3/4 |
| 20 | 17.00109 | 2 | Bushing |
| 21 | 17.00376.1 | 1 | Axle Frame Weldment |
| 22 | 17.00592.7 | 2 | Spindle Weldment |
| | 903306 | 8 | Bolt, Hex Head, 1/2-13 x 1-1/2 Gr 5 |
| | 901937 | 16 | Washer, Flat, 1/2 SAE |
| | 901650 | 8 | Nut, Hex Lock, 1/2-13 C-Lock |
| | | 2 | Wheel & Tire Assembly, 18/8.50, See Wheel Pages |
| 23 | 17.00250 | 1 | Pin, Cylinder |
| 24 | 17.00795.7 | 1 | Stop, Cylinder |
| 25 | 09.73501 | 1 | Pin, Safety |
| 26 | 17.00632 | 1 | Cylinder, 2-1/2 x 6, w/Stroke Control |
| | 17.00210 | 1 | Seal Kit, Cylinder, 2-1/2 |
| 27 | 17.00111 | 1 | Stroke Control |
| 28 | 09.73502 | 1 | Pin, Hair, .105 Wire, .78 ID |
| 29 | 17.00651 | 1 | Spacer, Stroke Control, 1-1/8 Rod |

# Upper Frame And Hitch

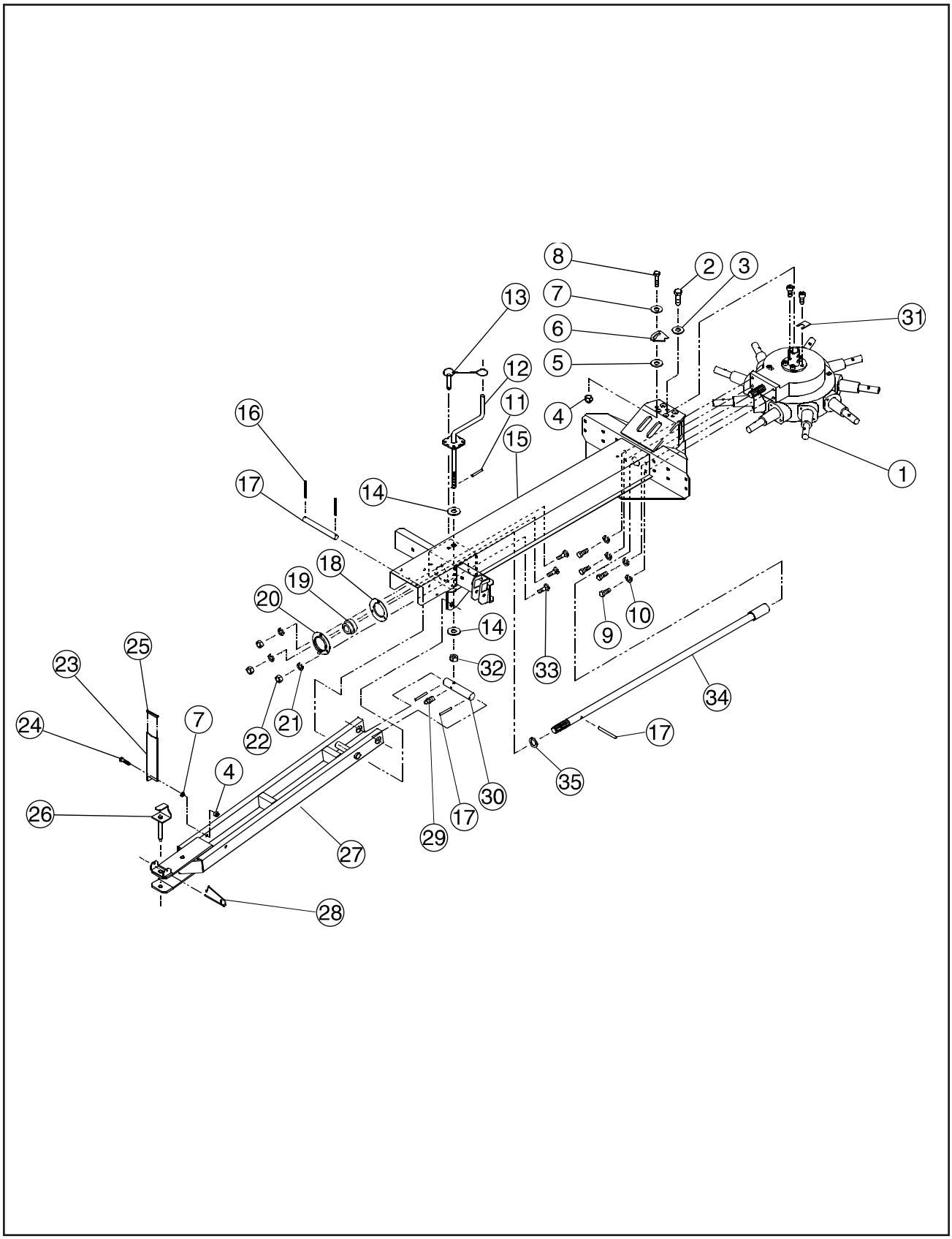

# Upper Frame And Hitch Parts List

| Item | Part No. | Quantity | Description |
|---|---|---|---|
| 1 | 17.00622.1 | 1 | Gearbox, Rotary Rake |
| 2 | 09.71532 | 1 | Bolt, Hex Head, 1/2-20 x 1-1/4 Gr 8 |
| 3 | 09.70941 | 1 | Washer, Flat, 1/2, Thick |
| 4 | 906401 | 2 | Nut, Hex Lock, 1/2-13 Nylon Insert |
| 5 | 09.70941 | 1 | Washer, Flat, 1/2, Thick |
| 6 | 17.00259 | 1 | Keeper, Bolt |
| 7 | 900497 | 2 | Washer, Flat, 1/2 |
| 8 | 902050 | 1 | Bolt, Hex Head, 1/2-13 x 2 |
| 9 | 09.73801 | 4 | Bolt, Hex Head, M14-2 x 35, Gr 8.8 Znc |
| 10 | 09.73000 | 4 | Lockwasher, M14 |
| 11 | 01.74118 | 1 | Pin, Roll, 3/16 x 3/4 |
| 12 | 17.00610 | 1 | Handle, Adjustment, Weldment |
| 13 | 09.74302 | 1 | Pin, Hitch, 3/8 x 1-1/2 Cotterless |
| 14 | 903708 | 2 | Washer, Flat, 1" SAE |
| 15 | 17.00968.1 | 1 | Frame, Front Weldment w/Decals |
| 16 | 09.72003 | 5 | Pin, Roll, 3/16 x 2 |
| 17 | 17.00058 | 1 | Pin, Pivot |
| 18 | 17.00057 | 1 | Flangette, Relube Mating |
| 19 | 17.00056 | 1 | Bearing w/Collar, 1-3/8 |
| 20 | 17.00055 | 1 | Flangette, Relube w/Zerk |
| 21 | 900504 | 3 | Lockwasher, 3/8 Med |
| 22 | 900366 | 3 | Nut, Hex, 3/8-16 |
| 23 | 17.00180.7 | 1 | Bracket, PTO Storage |
| 24 | 901341 | 1 | Bolt, Hex Head, 1/2-13 x 2-1/2 |
| 25 | 17.00181 | 1 | Grommet |
| 26 | 17.00135 | 1 | Pin, Hitch, Weldment |
| 27 | 17.00609.1 | 1 | Hitch Weldment w/Decals |
| 28 | 09.73501 | 1 | Pin, Safety |
| 29 | 900538 | 1 | Fitting, Grease, 1/4-28 |
| 30 | 17.00613.7 | 1 | Pin, Pivot |
| 31 | 17.00265 | 1 | Shim, Slotted |
| 32 | 09.70791 | 1 | Nut, Hex Lock, 1-8 Nylon Insert |
| 33 | 903692 | 3 | Bolt, Carriage, 3/8-16 x 1 |
| 34 | 17.00647 | 1 | Shaft, Drive, Weldment |
| 35 | 09.73300 | 1 | Washer, Flat, 1-3/8 x 2-1/8 x 14 Ga |

# Tandem Axle, Wheels And Tires

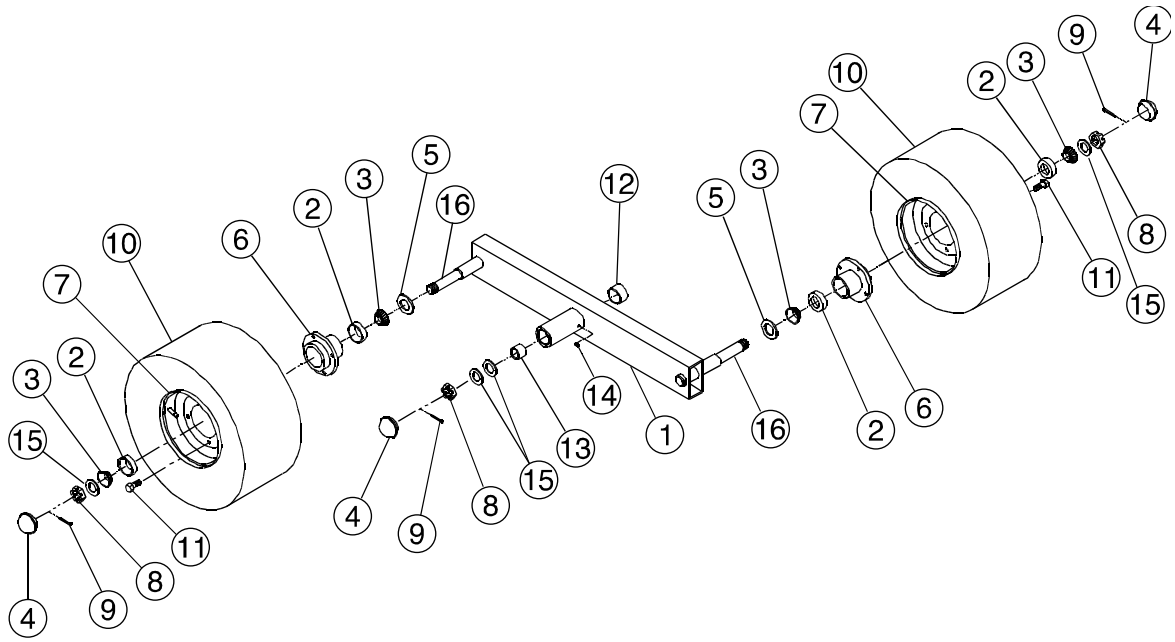

# Tandem Axle, Wheels And Tires Parts List

| Item | Part No. | Quantity | Description |
|---|---|---|---|
| 1 | 17.00598.7 | 2 | Tandem Axle - Rake (Includes Items 12, 13, 14, 16) |
| 2 | 902578 | 8 | Bearing Cup |
| 3 | 902568 | 8 | Bearing Cone, 1.0000 |
| 4 | 17.00142 | 6 | Hub Cab |
| 5 | 17.00141 | 4 | Seal, Oil, 1-1/4 |
| 6 | 17.00451 | 4 | Hub Assembly (Includes Items 2, 3, 4, 5, 8, 9, 11) |
| 7 | 17.00453 | 4 | Wheel, 8 x 7, 4-Bolt |
| 8 | 17.00143 | 6 | Nut Slotted Jam GR5 1-14 UNS |
| 9 | 900534 | 6 | Pin, Cotter 3/16 x 1-1/4 |
| 10 | 17.00908 | 4 | Wheel & Tire Assembly 18 x 9.5 x 8/10 ply Tube Type |
| | 17.00940 | 4 | Tire & Tube, 18 x 9.5 x 8/10 ply |
| | 17.00936 | 4 | Tube for 18 x 9.5/8.5 x 8 |
| 11 | 09.74007 | 16 | Bolt, Wheel |
| 12 | 01.76445 | 2 | Bushing 1-1/2 x 1-3/4 x 1 |
| 13 | 900060 | 2 | Bushing 1.00 4 x 1.25 15 x 1 |
| 14 | 900538 | 2 | Grease Zerk 1/4-28 Taper |
| 15 | 01.73881 | 8 | Washer, Flat - 1 x 1.5 x .07 |
| 16 | 17.00600 | AR | Spindle, Replacement (Must Be Welded In) (Included In Item 1) |

# Tandem Stops

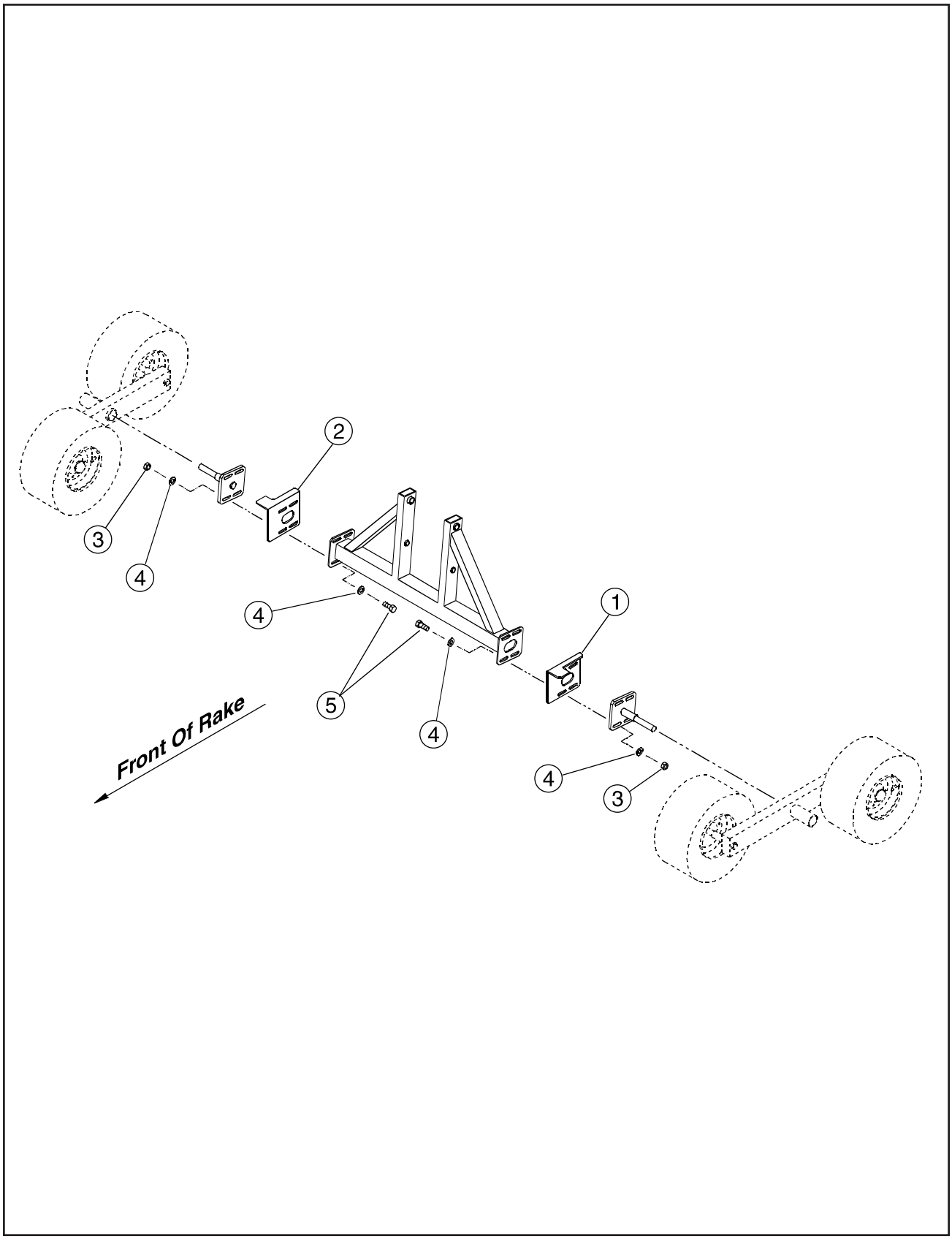

# Tandem Stops Parts List

| Item | Part No. | Quantity | Description |
|---|---|---|---|
| 1 | 17.00902.7 | 1 | Stop - LH |
| 2 | 17.00903.7 | 1 | Stop - RH |
| 3 | 901650 | 8 | Nut, Center Lock 1/2" |
| 4 | 901937 | 16 | Flat Washer 1/2" |
| 5 | 903518 | 8 | Bolt 1/2 x 1-3/4 |

# Wheel And Tire

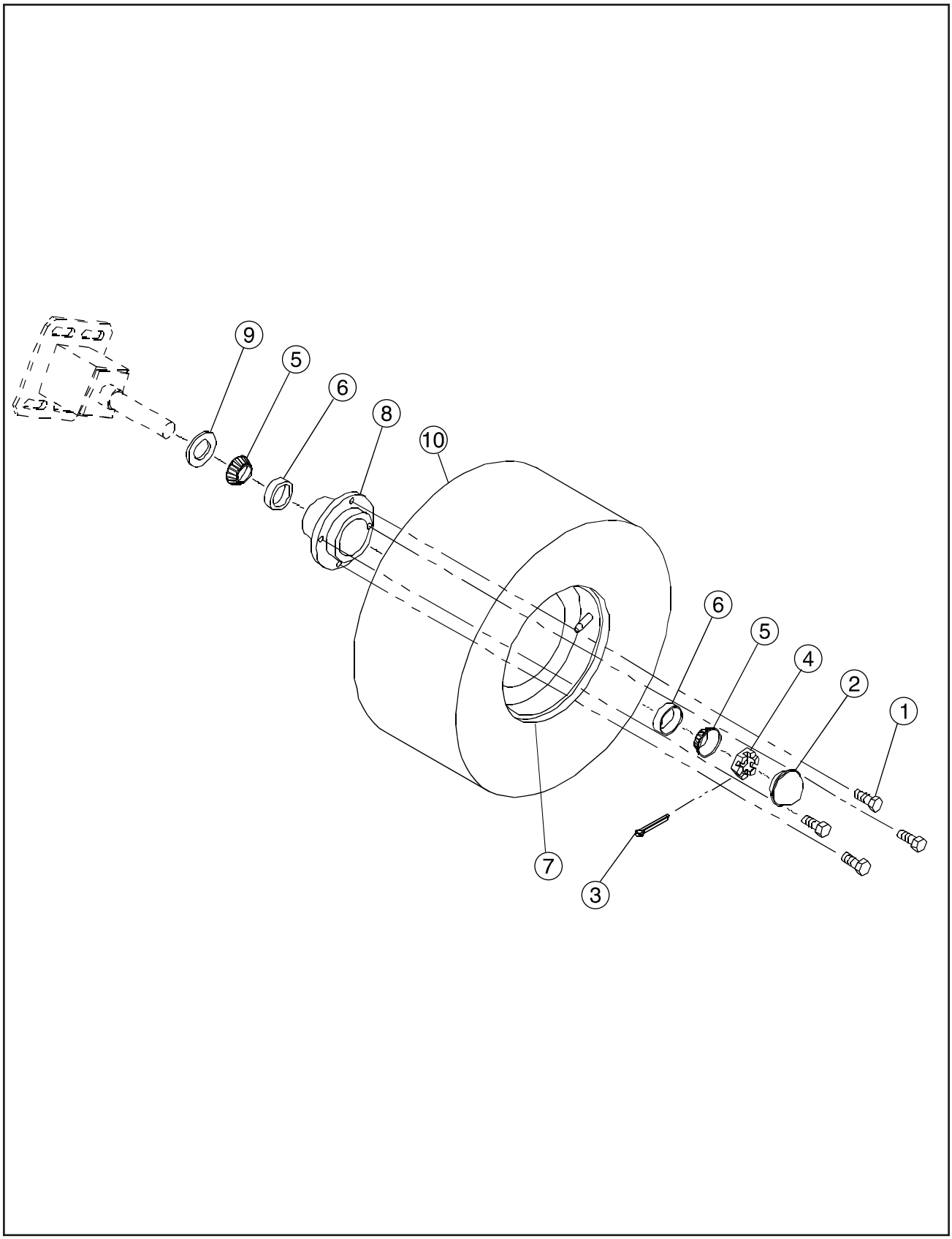

# Wheel And Tire Parts List

| Item | Part No. | Quantity | Description |
|---|---|---|---|
| 1 | 09.74007 | 4 | Bolt, Wheel, 1/2-20 x 29/32 x 60° |
| 2 | 17.00142 | 1 | Cap, Hub |
| 3 | 900534 | 1 | Pin, Cotter, 3/16 x 1-1/4 |
| 4 | 17.00143 | 1 | Nut, Slotted Jam, 1-14 UNS |
| 5 | 902568 | 2 | Bearing Cone, 1.0000 |
| 6 | 902578 | 2 | Bearing Cup |
| 7 | 17.00453 | 1 | Wheel, 8 x 7, 4 Bolt |
| 8 | 17.00451 | 1 | Hub Assembly (Includes Items 1, 2, 5, 6 & 9) |
| 9 | 17.00141 | 1 | Seal, Oil, 1-1/4 |
| 10 | 17.00908 | 1 | Wheel & Tire Assembly 18 x 9.5 x 8, 10 Ply Tube Type |
| | 17.00936 | 1 | Tube for 18 x 9.5 x 8 |
| | 17.00940 | 1 | Tire & Tube, 18 x 9.5 x 8, 10 Ply |

# Guards

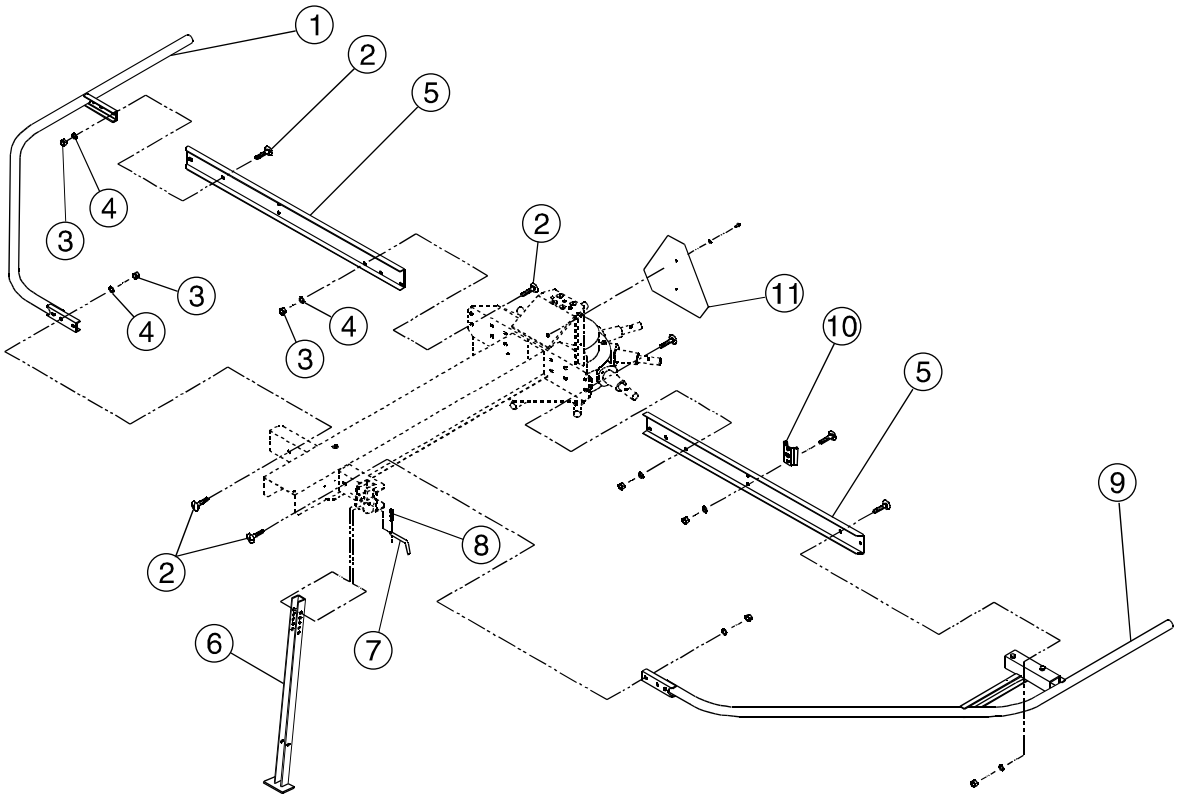

# Guards Parts List

| Item | Part No. | Quantity | Description |
|---|---|---|---|
| 1 | 17.00964 | 1 | Guard, Rake, Right Side w/Reflector |
| 2 | 903695 | 16 | Bolt, Carriage, 1/2-13 x 1-1/4 |
| 3 | 900369 | 16 | Nut, hex, 1/2-13 |
| 4 | 900506 | 16 | Lockwasher, 1/2 Med |
| 5 | 17.00966 | 2 | Guard, Support w/Reflector |
| 6 | 17.00053.7 | 1 | Parking Stand |
| 7 | 02.16500 | 1 | Pin, Pull |
| 8 | 02.12950 | 1 | Pin, Hair, 1/8 x 2-9/16 Znc |
| 9 | 17.00965 | 1 | Guard, Rake, Left Side w/Reflector |
| 10 | 07.05833.5 | 1 | Bracket, SMV |
| | 903689 | 2 | Bolt, Carriage, 5/16-18 x 3/4 |
| | 900503 | 2 | Lockwasher, 5/16 |
| | 900365 | 2 | Nut, Hex, 5/16-18 |
| 11 | 907224 | 1 | Emblem, SMV |
| | 904863 | 2 | Bolt, Hex Head, 1/4-20 x 3/4 |
| | 904092 | 2 | Nut, Hex, 1/4-20 |
| | 900493 | 2 | Washer, Flat, 1/4 |

# Swath Screen

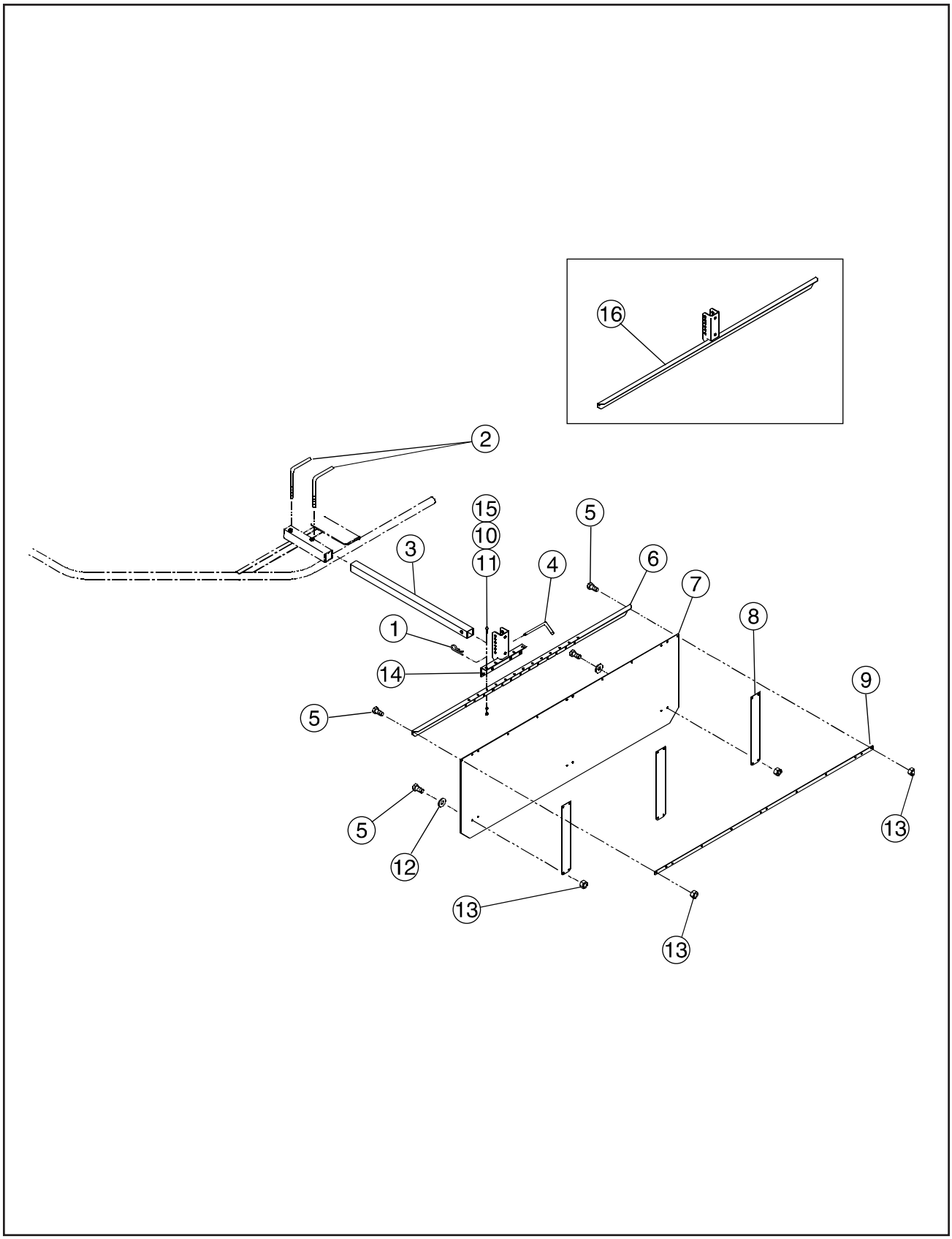

# Swath Screen Parts List

| Item | Part No. | Quantity | Description |
|---|---|---|---|
| 1 | 904508 | 1 | Pin, Hair, 1/8 x 2-9/16 Znc |
| 2 | 17.00069 | 2 | Pin, Threaded |
| 3 | 17.00072.7 | 1 | Adjuster - Swath Screen |
| 4 | 02.16500 | 1 | Pin, Pull |
| 5 | 904863 | 18 | Hex Head Bolt, GR5 1/4 x 3/4" (Standard Screen) |
| | 904863 | 25 | Hex Head Bolt, GR5 1/4 x 3/4" (Optional 8 Ft Screen) |
| 6 | 17.00752.7 | 1 | Angle - Swath Screen (Standard Screen) |
| | 17.00868.7 | 1 | Angle - Swath Screen (Optional 8 Ft Screen) |
| 7 | 17.00048 | 1 | Screen - Swath (Standard Screen) |
| | 17.00821 | 1 | Screen - Swath (Optional 8 Ft Screen) |
| 8 | 17.00081.7 | 3 | Stiffener - Swath Screen (Standard Screen) |
| | 17.00081.7 | 4 | Stiffener - Swath Screen (Optional 8 Ft Screen) |
| 9 | 17.00082.7 | 1 | Strip - Clamp (Standard Screen) |
| | 17.00869.7 | 1 | Strip - Clamp (Optional 8 Ft Screen) |
| 10 | 900503 | 8 | Lockwasher, 5/16" |
| 11 | 900365 | 8 | Nut, Hex, 5/16-18 |
| 12 | 900493 | 6 | Washer Flat 1/4" SAE (Standard Screen) |
| | 900493 | 8 | Washer Flat 1/4" SAE (Optional 8 Ft Screen) |
| 13 | 904092 | 18 | Hex Nut, LK 1/4" Ny-lok Cntr (Standard Screen) |
| | 904092 | 25 | Hex Nut, LK 1/4" Ny-lok Cntr (Optional 8 Ft Screen) |
| 14 | 17.00811 | 1 | Support - Swath Screen w/Reflector |
| 15 | 903689 | 8 | Bolt, Carriage, 5/16-18 x 3/4 Gr 5 |
| 16 | 17.00963 | NLA | Support - Swath Screen w/Reflector For Replacement Order |
| | | | 17.00811, 17.00752.7 and 8 each of: 900503, 900365 & 903689 |
| | 17.00777 | 1 | Swath Screen Complete - Standard (Consists Of Items: 5 thru 15) |
| | 17.00862 | 1 | Swath Screen Complete - Opt 8 Ft (Consists Of Items: 5 thru 15) |

# Tine Arms

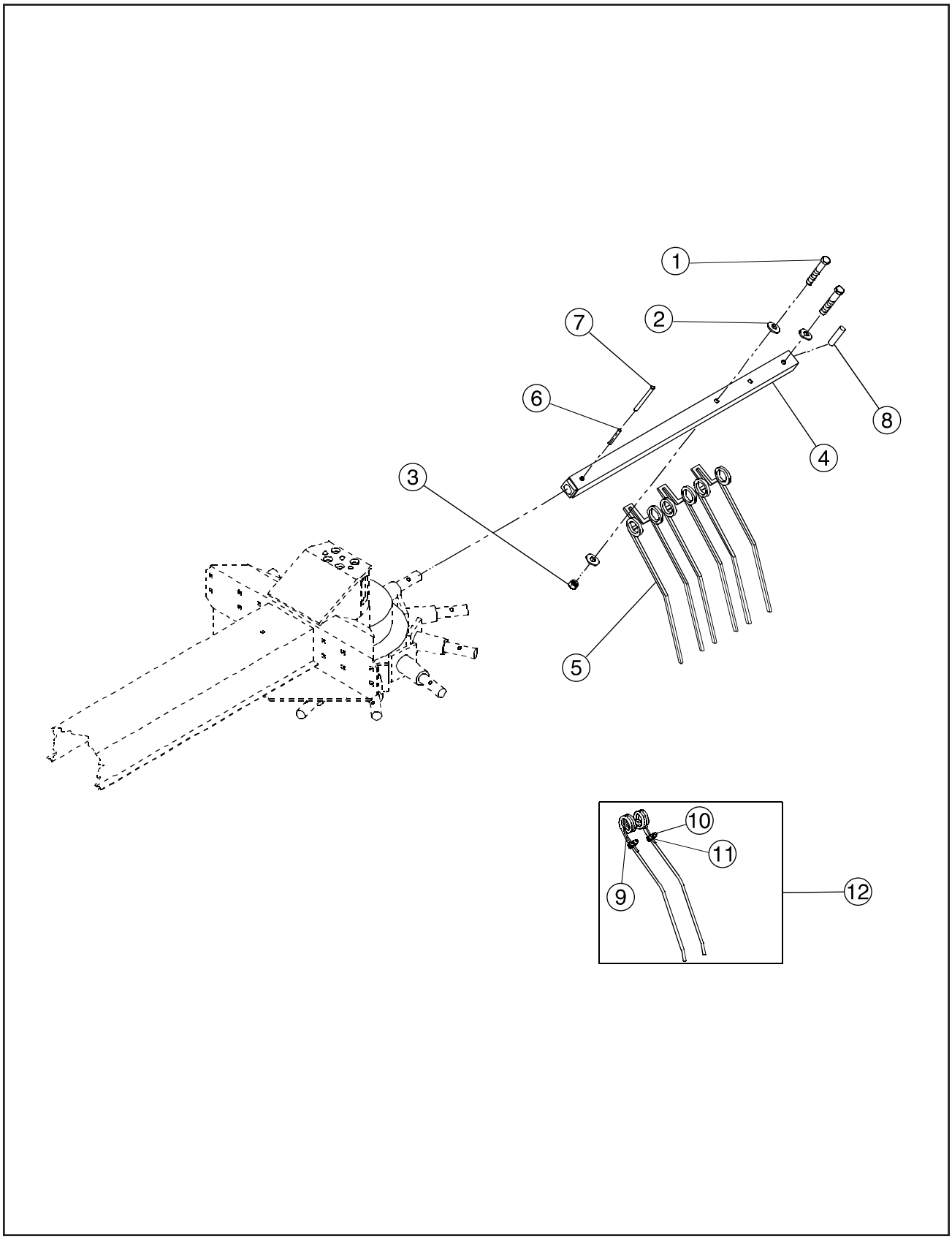

# Tine Arms Parts List

| Item | Part No. | Quantity | Description |
|---|---|---|---|
| 1 | 903855 | 27 | Bolt, Hex Head, 1/2-13 x 3-1/2 Gr 2 |
| 2 | 900497 | 27 | Washer, Flat, 1/2 |
| 3 | 907399 | 27 | Nut, Hex Lock, 1/2-13 Nylon Insert |
| 4 | 17.00916.7 | 9 | Tine Arm |
| 5 | 17.00763 | 27 | Tine, Rake |
| 6 | 09.72001 | 9 | Pin, Roll, 6 x 60 MM, DIN 1481 |
| 7 | 09.72000 | 9 | Pin, Roll, 10 x 60 MM, DIN 1481 |
| 8 | 17.00865 | 9 | Spacer, Tine Bolt |
| 9 | 333225B1 | 27 Ft. | Cable, Coated (1 ft per tine) |
| 10 | 900601 | 54 | Clamp, Cable, 5/16 |
| 11 | 900503 | 108 | Lockwasher, 5/16 |
| 12 | 17.00945 | 27 | Tine Saver Kit |

# Lift Hydraulics

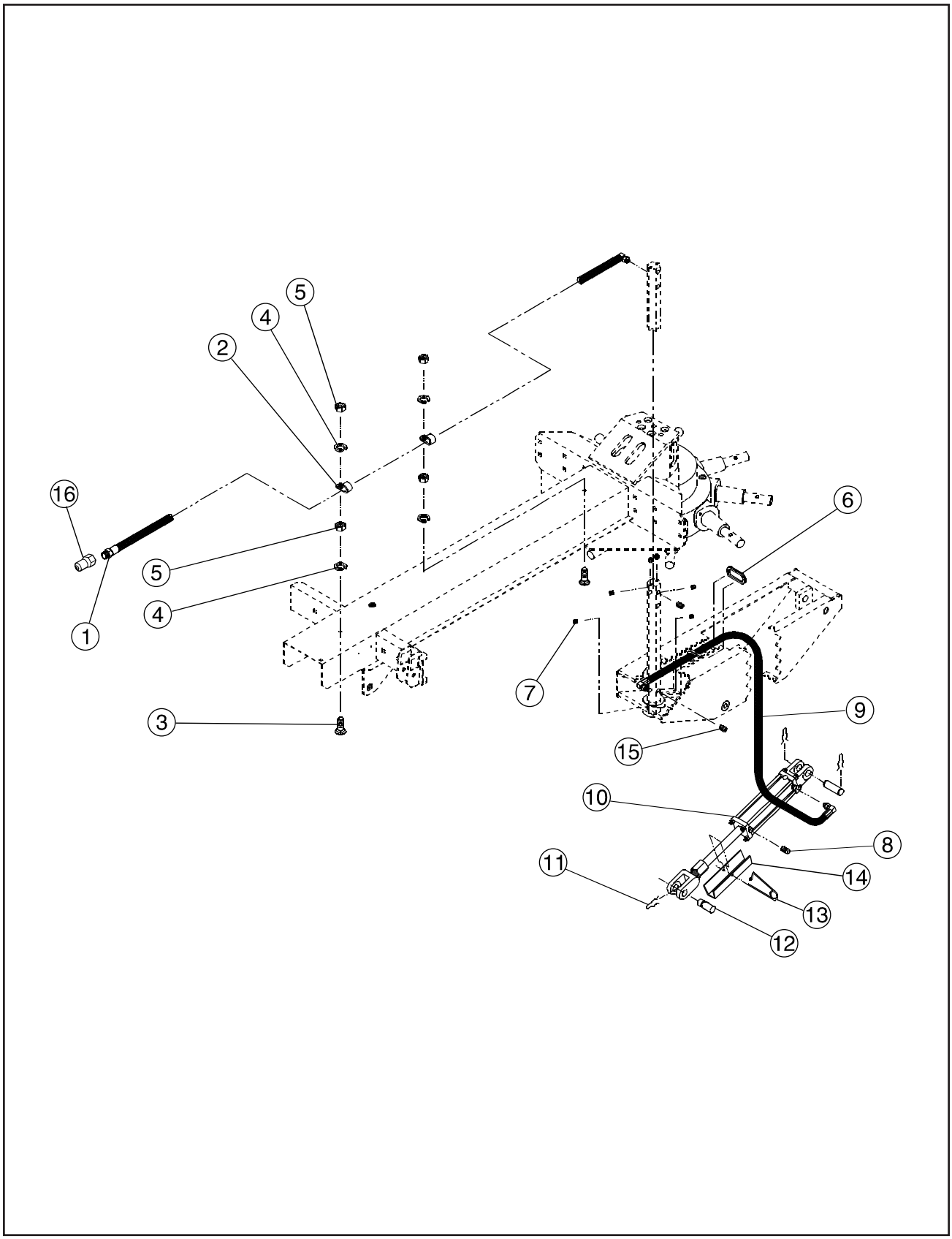

# Lift Hydraulics Parts List

| Item | Part No. | Quantity | Description |
|---|---|---|---|
| 1 | 17.00043 | 1 | Hose, Hydraulic |
| 2 | 17.00650 | 2 | Clamp, Hose, .625 ID Single |
| 3 | 904336 | 2 | Bolt, Carriage, 3/8-16 x 1-1/2 |
| 4 | 900504 | 4 | Lockwasher, 3/8 Med |
| 5 | 900366 | 4 | Nut, Hex, 3/8-16 |
| 6 | 17.00144 | 2 | Grommet |
| 7 | 17.00049 | 6 | Plug, 1/16 PTF - SAE Short |
| 8 | 61.80240 | 1 | Plug, 3/8-18 NPTF, Vented |
| 9 | 17.00050 | 1 | Hose, Hydraulic |
| 10 | 17.00632 | 1 | Cylinder, Hydraulic, 2-1/2 x 6, w/Stroke Control |
| | 17.00111 | 1 | Stroke Control |
| | 17.00651 | 1 | Spacer, Stroke Control, 1-1/8 Rod |
| 11 | 09.73502 | 1 | Pin, Hair, .105 Wire, .78 ID |
| 12 | 17.00250 | 1 | Pin, Cylinder |
| 13 | 09.73501 | 1 | Pin, Safety |
| 14 | 17.00646.7 | 1 | Stop, Cylinder |
| 15 | 65.10071 | 2 | Plug, 3/8 NPTF, Hex Socket |
| 16 | 07.19044 | 1 | Coupler, Male, 1/2 NPT |

# Decals

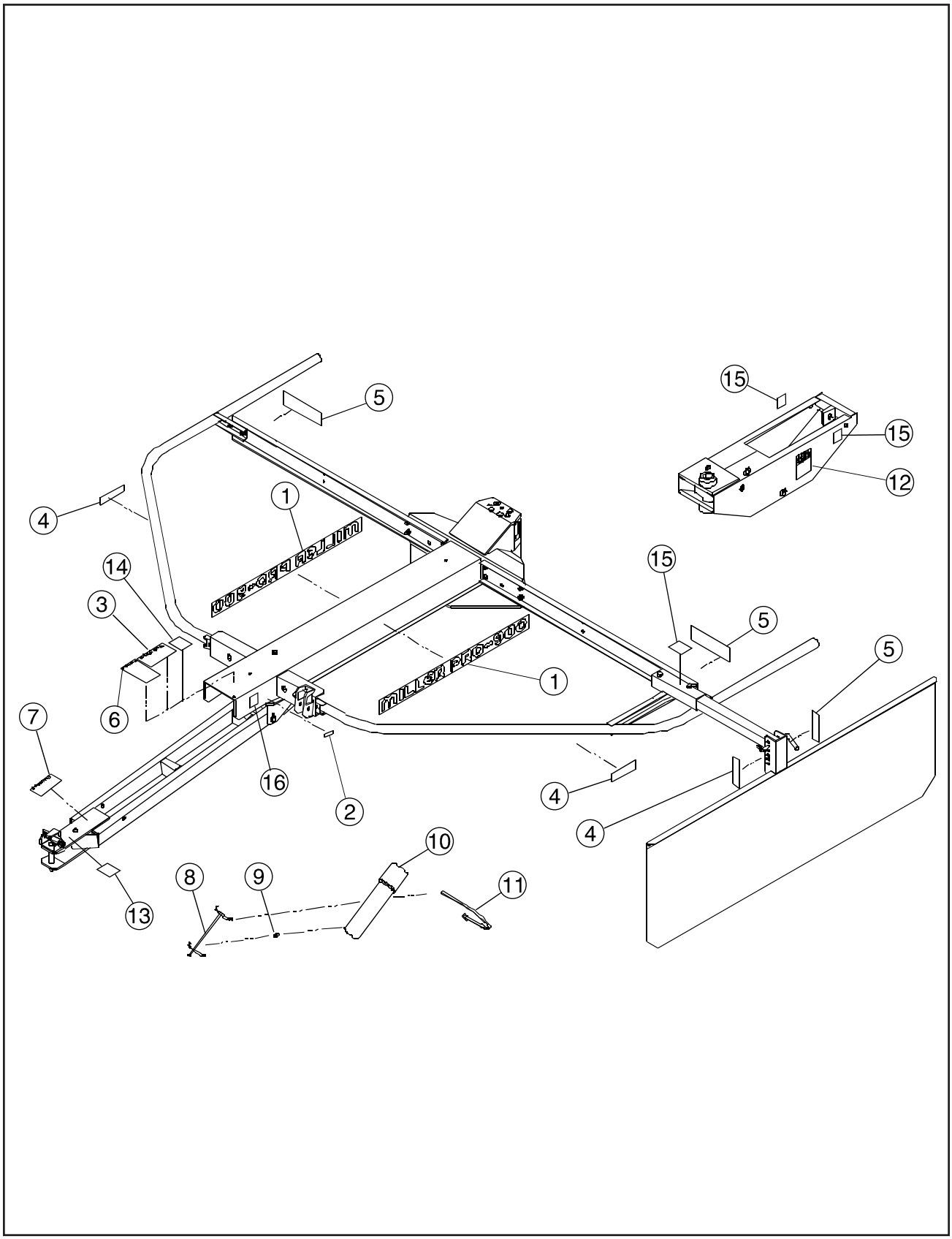

# Decals Parts List

| Item | Part No. | Quantity | Description |
|---|---|---|---|
| 1 | 17.00649 | 2 | Decal, Miller Pro 900 |
| 2 | 17.00469 | 1 | Decal, Patent |
| 3 | 16.20178 | 1 | Decal, Before Operating |
| 4 | 907220 | 3 | Reflector, Amber, 2 x 9 |
| 5 | 907219 | 3 | Reflector, Red, 2 x 9 |
| 6 | 16.20177 | 1 | Decal, Rotating Driveline |
| 7 | 340248B1 | 1 | Decal, 540 RPM |
| 8 | 907216 | 1 | Bracket, Operator Manual Tube (Thru 2005 Production) |
| 9 | 09.71112 | 2 | Bolt, Hex Head, 5/16-18 x 3/4 Special Gr 5 |
| 10 | 907215 | 1 | Tube, Operator Manual Storage (Thru 2005 Production) |
| | 907739 | 1 | Operator Manual Storage Tube (After 2005 Production) |
| 11 | 07.13145 | 1 | Tie, Cable, 11" (Thru 2005 Production) |
| 12 | 17.00669 | 2 | Decal, Cylinder Stop |
| 13 | 17.01148 | 1 | Decal, Important, Lift Links |
| 14 | 21.09024 | 1 | Decal, Warning, Hydraulic Fluids |
| 15 | 17.01149 | 3 | Decal, Danger, Rotating Arms |
| 16 | 17.01155 | 1 | Decal, Warning, Foot Crushing |

# Gear Box

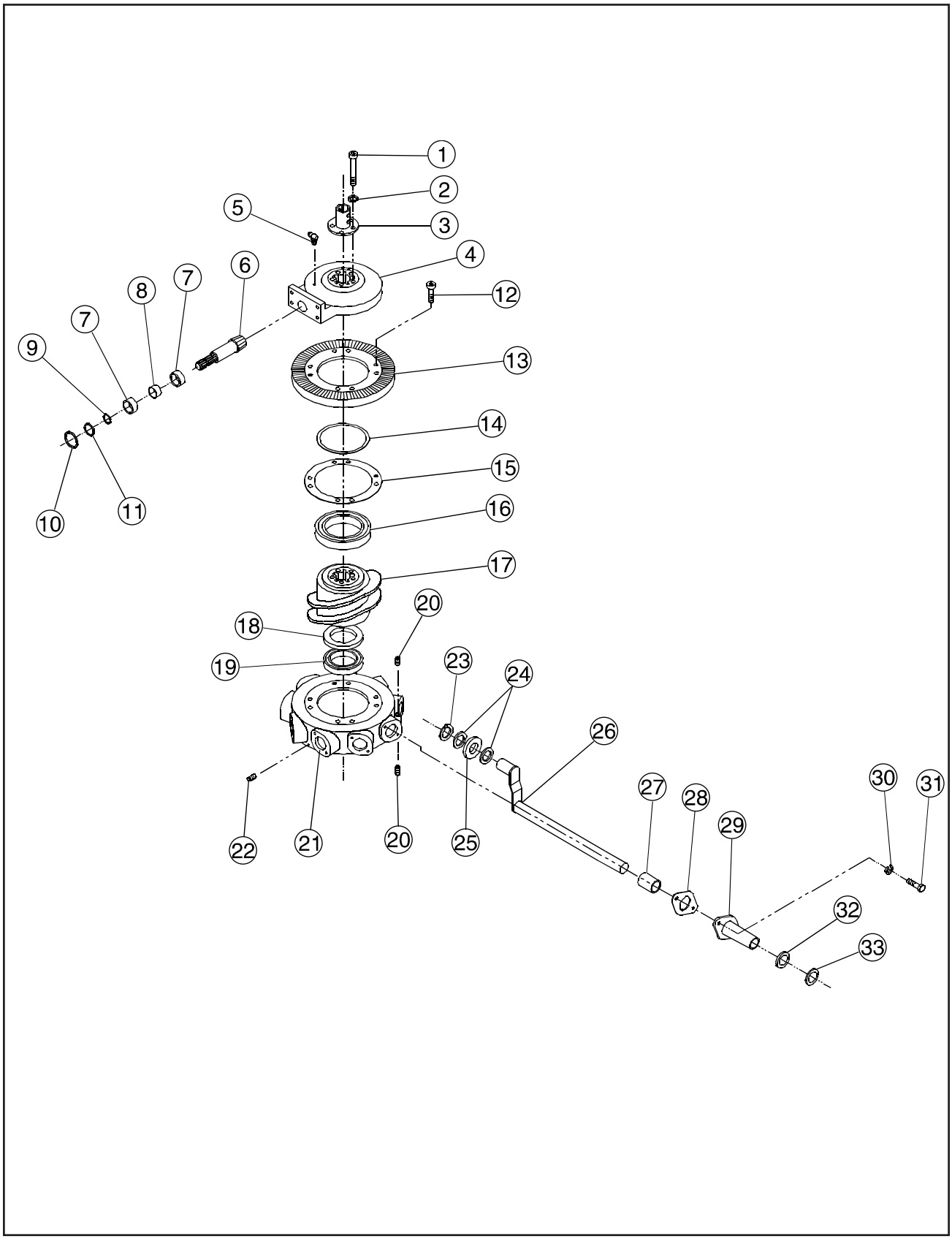
1
2
3
4
5
6
7
8
7
9
10
11
12
13
14
15
16
17
18
19
20
20
21
22
23
24
25
26
27
28
29
30
31
32
33

# Gear Box Parts List

| Item | Part No. | Quantity | Description |
|---|---|---|---|
| 1 | 09.72900 | 5 | Screw, Cap, M14-2 x 110 |
| 2 | 09.73000 | 5 | Lockwasher, M14 |
| 3 | 17.00095 | 1 | Gearbox Cap, Hex Bore |
| 4 | 17.00192 | 1 | Housing, Gearbox, Upper |
| 5 | 12.10055 | 1 | Fitting, Grease, 90° |
| | 17.00624 | 1 | Bolt, M10-16 w/Grease Hole (Not Shown) |
| 6 | 17.00092 | 1 | Pinion, Input, w/PTO Spline |
| 7 | 17.00194 | 2 | Bearing, Ball, Single Row 35 x 72 x 17 MM Sealed |
| 8 | 17.00091 | 1 | Spacer |
| 9 | 17.00088 | 1 | Retaining Ring, 35 MM, Ext |
| 10 | 17.00089 | 1 | Retaining Ring, 72 MM, Ext |
| 11 | 17.00090 | 1 | Washer |
| 12 | 09.72901 | 8 | Screw, Cap, M10-1.5 x 2.5 Socket Head, Gr 8.8 |
| 13 | 17.00193 | 1 | Gear, Bevel Ring |
| 14 | 17.00207 | AR | Shim, Bearing, .010 |
| | 17.00208 | AR | Shim, Bearing, .030 |
| 15 | 17.00200 | AR | Shim, Ring, .010 |
| | 17.00201 | AR | Shim, Ring, Gear, .030 |
| 16 | 17.00196 | 1 | Bearing, Ball, Single Row Open |
| 17 | 17.00911 | 1 | Cam, Center |
| 18 | 17.00094 | 1 | Seal, Oil, 75 x 105 x 12 MM |
| 19 | 17.00198 | 1 | Bearing, Ball, Single Row, 75 x 115 x 20 MM Open |
| 20 | 17.00096 | 2 | Plug, G 3/8" British Pipe, 13 MM Hex (No Shoulder) |
| 21 | 17.00657 | 1 | Housing, Gearbox, Lower 9 Arm |
| 22 | 09.74110 | 1 | Plug, G 1/4" British Pipe, 10 MM Hex (No Shoulder) |
| 23 | 17.00097 | 9 | Retaining Ring, 16 MM, Ext |
| 24 | 17.00098 | 18 | Flat Washer, 19 x 30 x 1.5 MM |
| 25 | 17.00099 | 9 | Roller, Cam |
| 26 | 17.00919 | 9 | Shaft, Tine Arm w/Lever |
| 27 | 17.00659 | 9 | Spacer, Tine Arm Shaft |
| 28 | 17.00101 | 9 | Gasket, Oval |
| 29 | 17.00102 | 9 | Support, Tine Arm Shaft |
| 30 | 09.73004 | 18 | Lockwasher, M12 |
| 31 | 09.73803 | 18 | Bolt, Hex Head, M12-1.75 x 30 |
| 32 | 17.00103 | 9 | Seal, Oil, 32 x 45 x 7 MM |
| 33 | 17.00104 | 9 | Flat Washer, 36 x 53 x 1 MM |
| | | | |
| | 17.00622.1 | 1 | Gearbox, Rotary Rake, 9 Arm |

# **PTO Driveline** (Prior To S/N 17.20289)

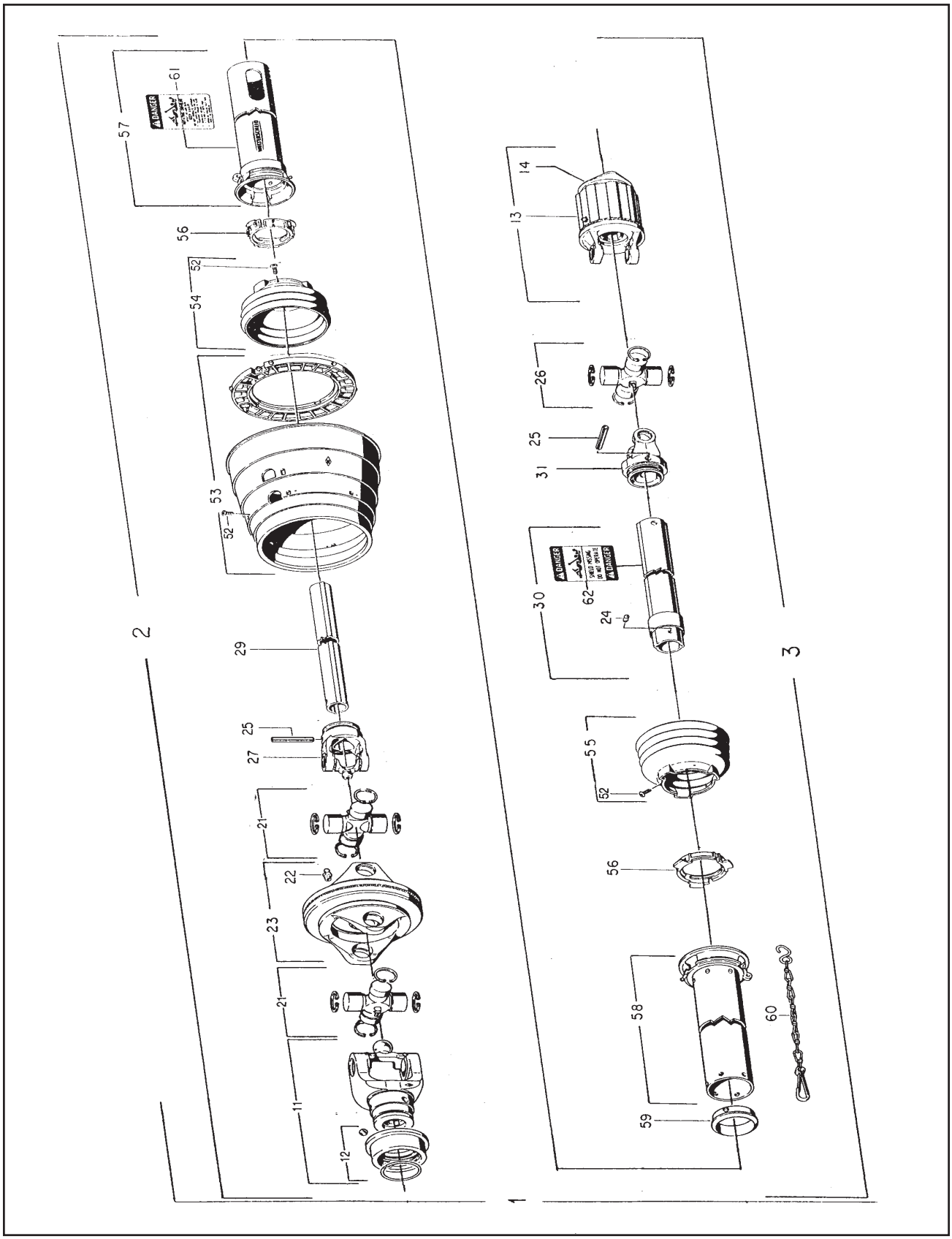

# PTO Driveline Parts List (Prior To S/N 17.20289)

| Item | Part No. | Quantity | Description |
|---|---|---|---|
| 1 | 17.00016 | 1 | Driveline, CV w/Clutch Size 2 |
| 2 | 17.00146 | 1 | Half Shaft, Male 85° w/Shield |
| 3 | 17.00147 | 1 | Half Shaft, Female w/Shield & Clutch |
| 11 | 17.00148 | 1 | Yoke, 1-3/8 - 6 Special Slide Collar |
| 12 | 17.00149 | 1 | Quick Disconnect Kit |
| 13 | 17.00166 | 1 | Clutch, Radial Pin |
| 14 | 17.00167 | 1 | Quick Disconnect Flange Kit |
| 21 | 17.00150 | 2 | Cross & Bearing Kit |
| 22 | 09.72600 | 1 | Fitting, Grease, M8 x 1 |
| 23 | 17.00151 | 1 | Yoke, Double w/Zerk |
| 24 | 09.72601 | 1 | Fitting, Grease, 3 MM x 3 MM Drive |
| 25 | 09.72005 | 2 | Pin, Roll, 10 x 65 MM |
| 26 | 17.00152 | 1 | Cross & Bearing Kit |
| 27 | 17.00153 | 1 | Yoke, Inboard |
| 29 | 17.00154 | 1 | Shaft, Inner Profile |
| 30 | 17.00155 | 1 | Shaft, Outer Profile Assembly |
| 31 | 17.00156 | 1 | Yoke, Inboard |
| 52 | 09.50101 | 8 | Screw, Tapping, 4 MM & 10 MM |
| 53 | 17.00157 | 1 | Shield, Cone, Wide Angle Assembly |
| 54 | 17.00158 | 1 | Shield, Cone, 2 Rib |
| 55 | 17.00159 | 1 | Shield, Cone, 4 Rib |
| 56 | 17.00160 | 2 | Ring, Bearing |
| 57 | 17.00161 | 1 | Shield, Tube, Outer |
| 58 | 17.00162 | 1 | Shield, Tube, Inner |
| 59 | 17.00163 | 1 | Bearing, Shield Support |
| 60 | 07.20665 | 1 | PTO Safety Chain, 044321 |
| 61 | 17.00164 | 1 | Decal, Danger Rotating Drive |
| 62 | 17.00165 | 1 | Decal, Danger Shield Missing |

# **Radial Pin Clutch** (Prior To S/N 17.20289)

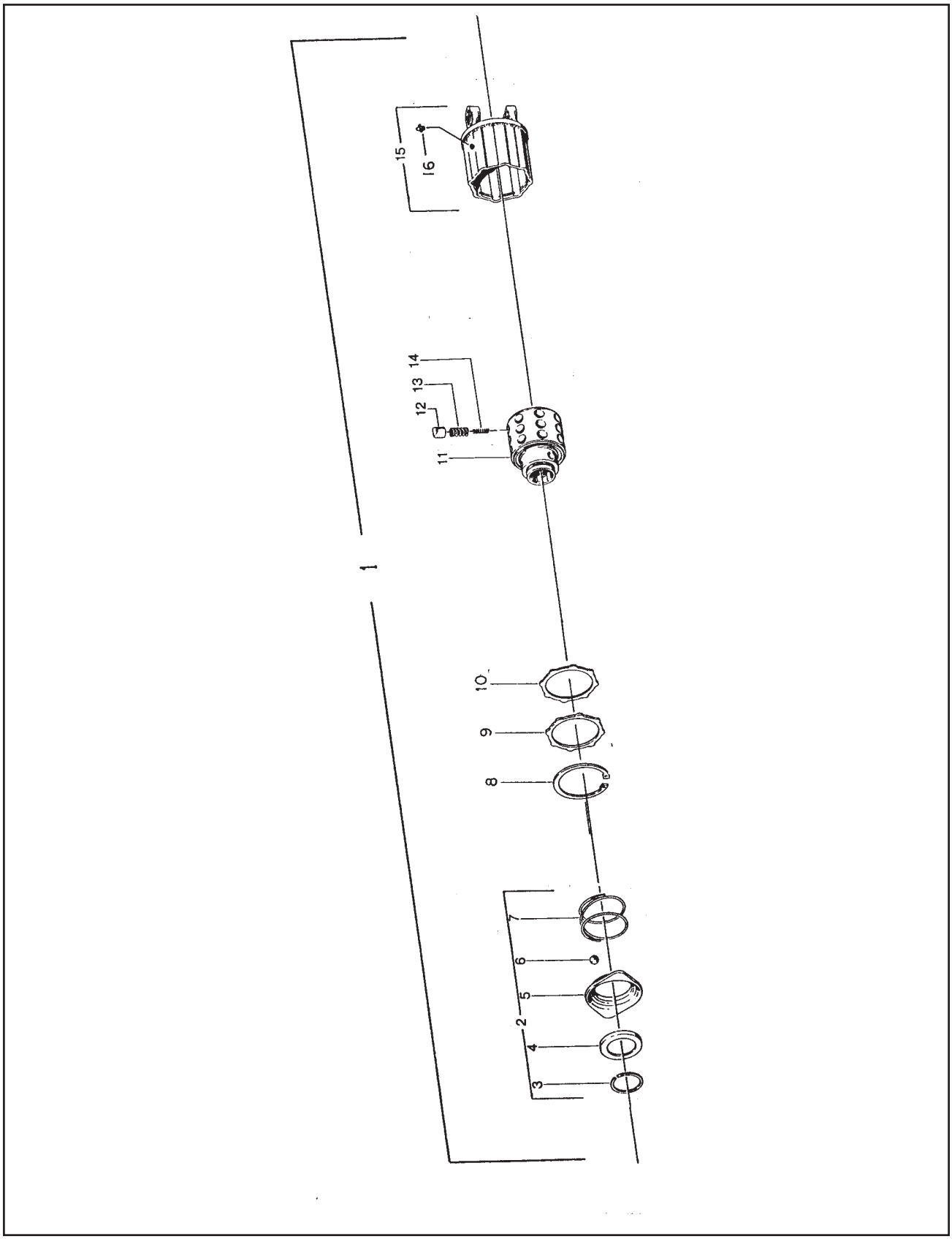

# Radial Pin Clutch Parts List (Prior To S/N 17.20289)

| Item | Part No. | Quantity | Description |
|---|---|---|---|
| 1 | 17.00166 | 1 | Clutch, Radial Pin |
| 2 | 17.00167 | 1 | Quick Disconnect Flange Kit |
| 3 | | 1 | Snap Ring (Included In Item 2) |
| 4 | | 1 | Flanged Ring (Included In Item 2) |
| 5 | | 1 | Lock Collar (Included In Item 2) |
| 6 | | 3 | Ball (Included In Item 2) |
| 7 | | 1 | Compression Spring (Included In Item 2) |
| 8 | 17.00168 | 1 | Ring, Retainer |
| 9 | 17.00169 | 1 | Ring, Thrust |
| 10 | 17.00170 | 1 | Ring, Seal |
| 11 | 17.00171 | 1 | Hub, Radial Pin Clutch |
| 12 | 17.00172 | 20 | Cam, Radial Pin Clutch |
| 13 | 17.00173 | 20 | Spring, Compression, Outer |
| 14 | 17.00174 | 0 (Ref Only) | Spring, Compression, Inner |
| 15 | 17.00175 | 1 | Housing, Radial Pin Clutch |
| 16 | 09.72602 | 1 | Fitting, Grease, M8.2 x 1 Tapered (Included In Item 15) |

# **PTO Shaft** (S/N 17.20289 & After)

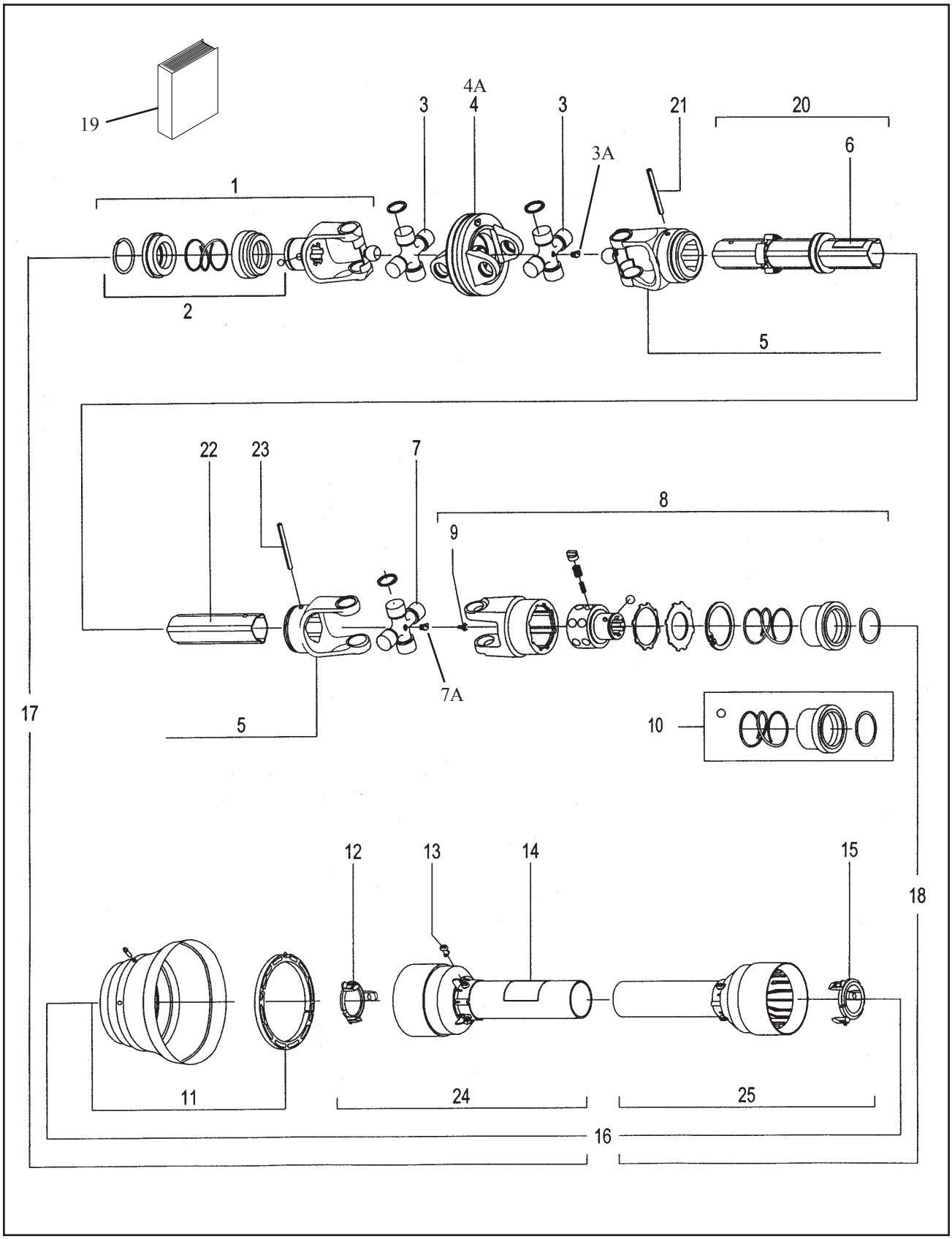

# PTO Shaft Parts List (S/N 17.20289 & After)

| Item | Part No. | Quantity | Description |
|---|---|---|---|
| 1 | 17.00896 | 1 | Yoke, Tractor, Complete |
| 2 | 907305 | 1 | Repair Kit, Slide Lock, Tractor Yoke |
| 3 | 17.00946 | 2 | Cross Kit |
| 3a | 907303 | 2 | Grease Zerk, M8 x 1, 45 Degree |
| 4 | 17.00897 | 1 | Yoke, Double |
| 4a | 09.72600 | 1 | Grease Zerk, M8 x 1, Straight |
| 5 | 17.00952 | 1 | Inner Shaft Kit (Includes Item 16) |
| 6 | 331639B2 | 1 | Decal, Shield Missing |
| 7 | 17.00947 | 1 | Cross Kit |
| 7a | 907303 | 1 | Grease Zerk, M8 x 1, 45 Degree |
| 8 | 17.00898 | 1 | Clutch, Radial Pin |
| 9 | 907304 | 1 | Grease Fitting, M6 x 1 |
| 10 | 907306 | 1 | Repair Kit, Slide Lock, Clutch |
| 11 | 17.00899 | 1 | Guard, CV |
| 12 | 17.00948 | 1 | Retaining Collar, Outer Tube |
| 13 | 22.00458 | 6 | Bolt, Retainer |
| 14 | 329594B2 | 1 | Decal, Danger, Rotating Drive Line |
| 15 | 17.00949 | 1 | Retaining Collar, Inner Tube |
| 16 | 17.00900 | 1 | Complete Guard w/Instruction Manual |
| 17 | 17.00894 | 1 | Tractor Half, PTO w/Guard |
| 18 | 17.00895 | 1 | Implement Half, PTO w/Guard |
| 19 | 907307 | 1 | PTO Maintenance Manual |
| 20 | 17.00956 | 1 | Tube, Female |
| 21 | 17.00960 | 1 | Roll Pin, Female Tube |
| 22 | 17.00957 | 1 | Tube, Male |
| 23 | 17.00961 | 1 | Roll Pin, Male Tube |
| 24 | 17.00958 | 1 | Guard, Tractor Half |
| 25 | 17.00959 | 1 | Guard, Implement Half |
| | | | |
| | 17.00950 | 1 | Tube, Female & Knuckle Assembly (Includes Items 6, 20 & 21) |
| | 17.00951 | 1 | Tube, Male & Knuckle Assembly (Includes Items 22 & 23) |
| | | | |
| | | | |
| | 17.00799 | 1 | PTO Complete |

# 2-1/2" x 6" Cylinder w/Set Screw Rod Clevis

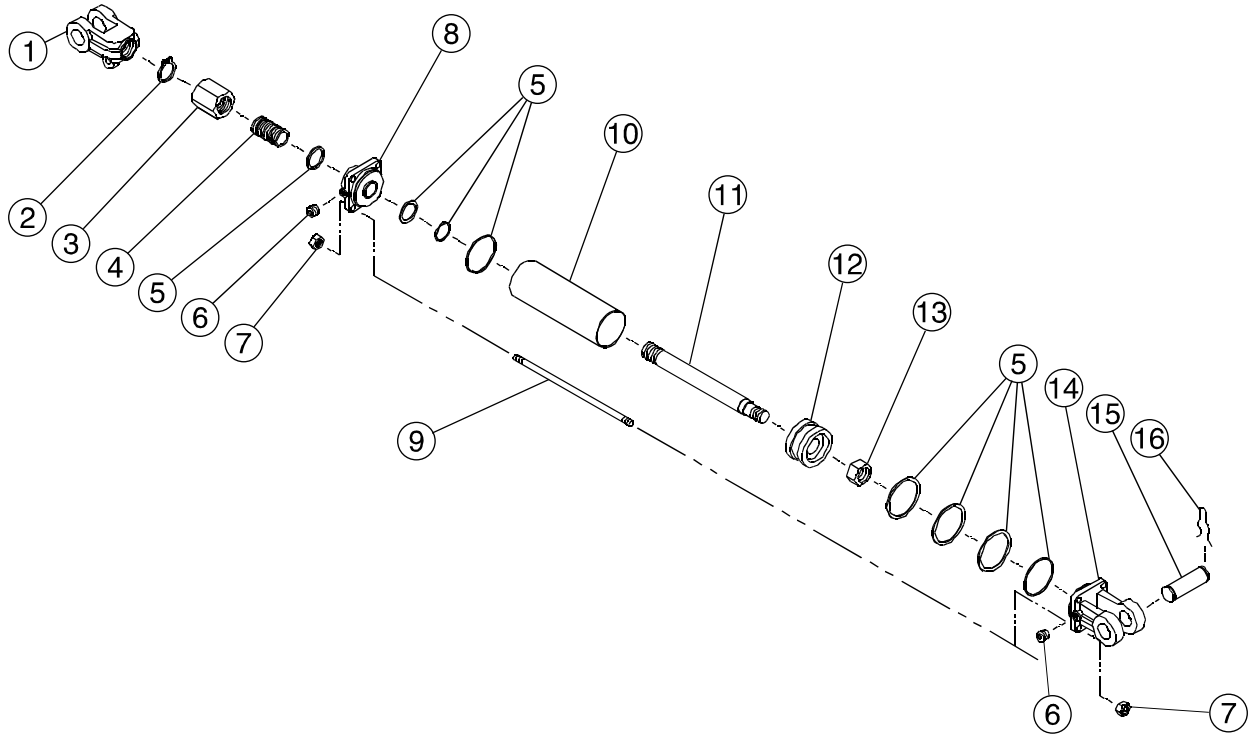

# 2-1/2" x 6" Cylinder w/Set Screw Rod Clevis Parts List

| Item | Part No. | Quantity | Description |
|---|---|---|---|
| 1 | 17.00664 | 1 | Clevis, Hydraulic cylinder, 1.13 Rod, set Screw |
| 2 | NA | | Included With Item 4 |
| 3 | NA | | Included With Item 4 |
| 4 | 17.00111 | 1 | Stroke Control, 1-1/8 Rod |
| 5 | 17.00210 | 1 | Seal Kit, Cylinder, 2-1/2 |
| 6 | 65.10071 | 1 | Plug, 3/8 NPTF, Hex Socket |
| 7 | 900366 | 8 | Nut, Hex, 3/8-16 |
| 8 | 17.00214 | 1 | Rod Cap, Hydraulic Cylinder, 2-1/2 |
| 9 | 17.00655 | 4 | Tie Rod, Hydraulic Cylinder, 8 |
| 10 | 17.00653 | 1 | Cylinder Tube, Hydraulic, 2-1/2 x 8 |
| 11 | 17.00654 | 1 | Rod, Hydraulic Cylinder, For set Screw Clevis Design |
| 12 | 17.00213 | 1 | Piston, Hydraulic Cylinder, 2-1/2 |
| 13 | 65.10061 | 1 | Nut, Hex Lock, 3/4-16 Toplock |
| 14 | 17.00212 | 1 | Clevis cap, Hydraulic Cylinder, 2-1/2 |
| 15 | 09.73603 | 2 | Pin, Clevis, 1 Grooved Headless |
| 16 | 09.73502 | 4 | Pin, Hair, External, 1" Pin |
| | | | |
| | | | |
| | 17.00632 | 1 | Cylinder, Hydraulic, 2-1/2 x 6 w/Stroke Control |

# Jack

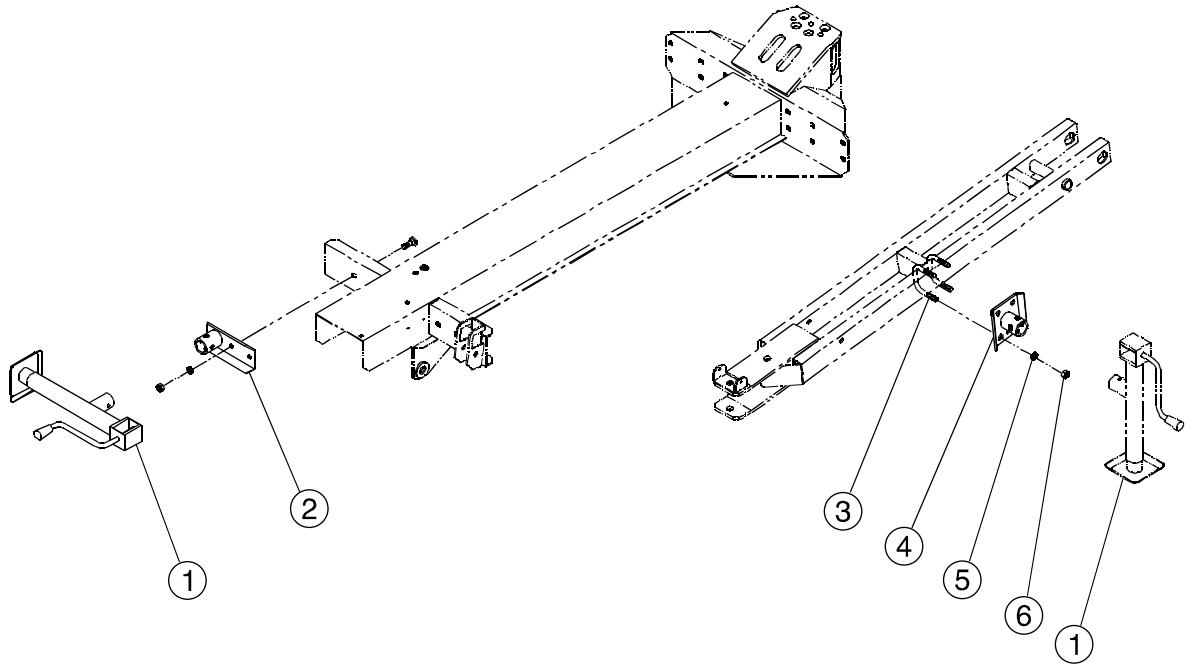

# Jack Parts List

| Item | Part No. | Quantity | Description |
|---|---|---|---|
| 1 | 17.00386 | 1 | Jack, 2000 lb, 15" Side Crank |
| 2 | 17.00626.7 | 1 | Bracket, Jack Storage |
| 3 | 07.17751 | 2 | U-Bolt, 1/2-13 |
| 4 | 17.00625.7 | 1 | Bracket, Jack Mount |
| 5 | 900506 | 4 | Lockwasher, 1/2 Med |
| 6 | 900369 | 4 | Nut, Hex, 1/2-13 |

# Part Number Index


| Part No. | Page |
|---|---|
| 01.73881 | 7 |
| 01.74118 | 5 |
| 01.76445 | 7 |
| 02.12950 | 13 |
| 02.16500 | 13, 15 |
| 07.05833.5 | 13 |
| 07.13145 | 21 |
| 07.17751 | 33 |
| 07.19044 | 19 |
| 07.20665 | 25 |
| 09.50101 | 25 |
| 09.70791 | 5 |
| 09.70941 | 5 |
| 09.70941 | 5 |
| 09.71112 | 21 |
| 09.71532 | 5 |
| 09.72000 | 17 |
| 09.72001 | 17 |
| 09.72003 | 3, 5 |
| 09.72005 | 25 |
| 09.72008 | 3 |
| 09.72600 | 25, 29 |
| 09.72601 | 25 |
| 09.72602 | 27 |
| 09.72900 | 23 |
| 09.72901 | 23 |
| 09.73000 | 5, 23 |
| 09.73004 | 23 |
| 09.73300 | 5 |
| 09.73501 | 3, 5, 19 |
| 09.73502 | 3, 19, 31 |
| 09.73603 | 3, 31 |
| 09.73801 | 5 |
| 09.73803 | 23 |
| 09.74007 | 7, 11 |
| 09.74110 | 23 |
| 09.74302 | 5 |
| 12.10055 | 23 |
| 16.20177 | 21 |
| 16.20178 | 21 |
| 17.00016 | 25 |
| 17.00043 | 19 |
| 17.00048 | 15 |
| 17.00049 | 3, 19 |
| 17.00050 | 19 |
| 17.00053.7 | 13 |
| 17.00055 | 5 |
| 17.00056 | 5 |
| 17.00057 | 5 |
| 17.00058 | 3, 5 |
| 17.00069 | 15 |
| 17.00072.7 | 15 |
| 17.00081.7 | 15 |
| 17.00082.7 | 15 |
| 17.00088 | 23 |
| 17.00089 | 23 |
| 17.00090 | 23 |
| 17.00091 | 23 |
| 17.00092 | 23 |
| 17.00094 | 23 |
| 17.00095 | 23 |
| 17.00096 | 23 |
| 17.00097 | 23 |
| 17.00098 | 23 |
| 17.00099 | 23 |
| 17.00101 | 23 |
| 17.00102 | 23 |
| 17.00103 | 23 |
| 17.00104 | 23 |
| 17.00109 | 3 |
| 17.00111 | 3, 19, 31 |
| 17.00135 | 5 |
| 17.00141 | 7, 11 |
| 17.00142 | 7, 11 |
| 17.00143 | 7, 11 |
| 17.00144 | 19 |
| 17.00146 | 25 |
| 17.00147 | 25 |
| 17.00148 | 25 |
| 17.00149 | 25 |
| 17.00150 | 25 |
| 17.00151 | 25 |
| 17.00152 | 25 |
| 17.00153 | 25 |
| 17.00154 | 25 |
| 17.00155 | 25 |
| 17.00156 | 25 |
| 17.00157 | 25 |
| 17.00158 | 25 |
| 17.00159 | 25 |
| 17.00160 | 25 |
| 17.00161 | 25 |
| 17.00162 | 25 |
| 17.00163 | 25 |
| 17.00164 | 25 |
| 17.00165 | 25 |
| 17.00166 | 25, 27 |
| 17.00167 | 25, 27 |
| 17.00168 | 27 |
| 17.00169 | 27 |
| 17.00170 | 27 |
| 17.00171 | 27 |
| 17.00172 | 27 |
| 17.00173 | 27 |
| 17.00174 | 27 |
| 17.00175 | 27 |
| 17.00180.7 | 5 |
| 17.00181 | 5 |
| 17.00192 | 23 |
| 17.00193 | 23 |
| 17.00194 | 23 |
| 17.00196 | 23 |
| 17.00198 | 23 |
| 17.00200 | 23 |
| 17.00201 | 23 |
| 17.00207 | 23 |
| 17.00208 | 23 |
| 17.00210 | 3, 31 |
| 17.00212 | 31 |
| 17.00213 | 31 |
| 17.00214 | 31 |
| 17.00215.7 | 3 |
| 17.00223 | 3 |
| 17.00231 | 3 |
| 17.00250 | 3, 19 |
| 17.00259 | 5 |
| 17.00265 | 5 |
| 17.00376.1 | 3 |
| 17.00386 | 33 |
| 17.00451 | 7, 11 |
| 17.00453 | 7, 11 |
| 17.00469 | 21 |
| 17.00592.7 | 3 |
| 17.00598.7 | 7 |
| 17.00600 | 7 |
| 17.00609.1 | 5 |
| 17.00610 | 5 |
| 17.00613.7 | 5 |
| 17.00622.1 | 5, 23 |
| 17.00624 | 23 |
| 17.00625.7 | 33 |
| 17.00626.7 | 33 |
| 17.00632 | 3, 19, 31 |
| 17.00646.7 | 19 |
| 17.00647 | 5 |
| 17.00649 | 21 |
| 17.00650 | 19 |

# Part Number Index (continued)


| Part No. | Page |
|---|---|
| 17.00651 | 3, 19 |
| 17.00653 | 31 |
| 17.00654 | 31 |
| 17.00655 | 31 |
| 17.00657 | 23 |
| 17.00659 | 23 |
| 17.00664 | 31 |
| 17.00669 | 21 |
| 17.00752.7 | 15 |
| 17.00763 | 17 |
| 17.00777 | 15 |
| 17.00795.7 | 3 |
| 17.00799 | 29 |
| 17.00811 | 15 |
| 17.00821 | 15 |
| 17.00862 | 15 |
| 17.00865 | 17 |
| 17.00868.7 | 15 |
| 17.00869.7 | 15 |
| 17.00894 | 29 |
| 17.00895 | 29 |
| 17.00896 | 29 |
| 17.00897 | 29 |
| 17.00898 | 29 |
| 17.00899 | 29 |
| 17.00900 | 29 |
| 17.00902.7 | 9 |
| 17.00903.7 | 9 |
| 17.00905.7 | 3 |
| 17.00906 | 3 |
| 17.00908 | 7, 11 |
| 17.00911 | 23 |
| 17.00916.7 | 17 |
| 17.00919 | 23 |
| 17.00936 | 7, 11 |
| 17.00940 | 7, 11 |
| 17.00945 | 17 |
| 17.00946 | 29 |
| 17.00947 | 29 |
| 17.00948 | 29 |
| 17.00949 | 29 |
| 17.00950 | 29 |
| 17.00951 | 29 |
| 17.00952 | 29 |
| 17.00956 | 29 |
| 17.00957 | 29 |
| 17.00958 | 29 |
| 17.00959 | 29 |
| 17.00960 | 29 |
| 17.00961 | 29 |
| 17.00963 | 15 |
| 17.00964 | 13 |
| 17.00965 | 13 |
| 17.00966 | 13 |
| 17.00967.1 | 3 |
| 17.00968.1 | 5 |
| 17.01148 | 21 |
| 17.01149 | 21 |
| 17.01155 | 21 |
| 21.00139 | 3 |
| 21.09024 | 21 |
| 22.00458 | 29 |
| 329594B2 | 29 |
| 331639B2 | 29 |
| 333225B1 | 17 |
| 340248B1 | 21 |
| 61.80240 | 19 |
| 65.10061 | 31 |
| 65.10071 | 19, 31 |
| 900060 | 7 |
| 900365 | 13, 15 |
| 900366 | 5, 19, 31 |
| 900369 | 13, 33 |
| 900493 | 13, 15 |
| 900497 | 5, 17 |
| 900499 | 3 |
| 900503 | 13, 15, 17 |
| 900504 | 5, 19 |
| 900506 | 13, 33 |
| 900530 | 3 |
| 900534 | 7, 11 |
| 900538 | 5, 7 |
| 900601 | 17 |
| 901319 | 3 |
| 901341 | 5 |
| 901650 | 3, 9 |
| 901937 | 3, 9 |
| 902050 | 5 |
| 902568 | 7, 11 |
| 902578 | 7, 11 |
| 903061 | 3 |
| 903306 | 3 |
| 903518 | 9 |
| 903689 | 13, 15 |
| 903692 | 5 |
| 903695 | 13 |
| 903708 | 5 |
| 903855 | 17 |
| 904092 | 13, 15 |
| 904261 | 3 |
| 904336 | 19 |
| 904508 | 15 |
| 904635 | 3 |
| 904863 | 13 |
| 904863 | 15 |
| 906349 | 3 |
| 906401 | 5 |
| 906402 | 3 |
| 907215 | 21 |
| 907216 | 21 |
| 907219 | 21 |
| 907220 | 21 |
| 907224 | 13 |
| 907303 | 29 |
| 907304 | 29 |
| 907305 | 29 |
| 907306 | 29 |
| 907307 | 29 |
| 907399 | 17 |
| 907739 | 21 |

© 2007 by Miller-St. Nazianz, Inc.