ROTARY RAKE

PARTS BOOK

MODEL 115

17.00803.3D

This parts book is furnished for your convenience only. All parts must be purchased through an authorized dealer. Call us for a dealer near you.

MILLER
St. Nazianz

P O Box 127
511 East Main St.
St. Nazianz, WI 54232
(920) 773-2121

Issue Date: 5/05

victor

115 Rotary Rake

Contents

Page

Lower Frame **2**
Lower Frame Parts List 3
Upper Frame & Hitch **4, 6**
Upper Frame & Hitch Parts List 5, 7
Tandem Axle, Wheels & Tires **8**
Tandem Axle, Wheels & Tires Parts List 9
Tandem Stops (Prior to S/N 17.15712) **10**
Tandem Stops Parts List (Prior to S/N 17.15712) 11
Guards **12**
Guards Parts List 13
Swath Screen **14**
Swath Screen Parts List 15
Tine Arms **16**
Tine Arms Parts List 17
Hydraulic Lift System **18**
Hydraulic Lift System Parts List 19
Transport Lights & Wiring **20**
Transport Lights & Wiring Parts List 21
Decals & Trim **22**
Decals & Trim Parts List 23
Gear Box - Left Hand Rake **24**
Gear Box - Left Hand Rake Parts List 25
Gear Box - Right Hand Rake **26**
Gear Box - Right Hand Rake Parts List 27
PTO Shaft **28**
PTO Shaft Parts List 29
Part Number Index **30**

Lower Frame

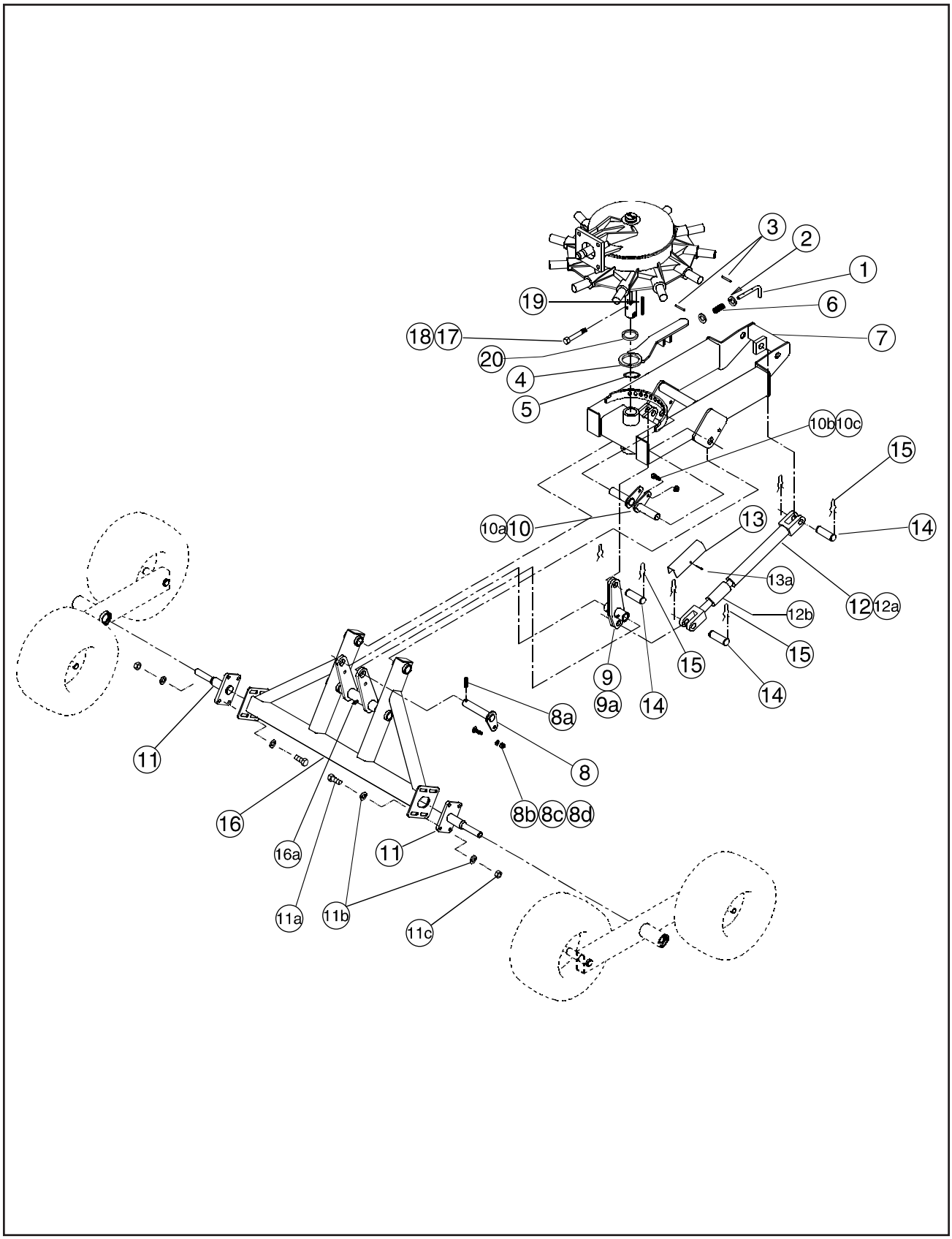
3
2
1
19
6
18
17
7
20
4
5
10b
10c
15
10a
10
13
14
13a
12
12a
12b
15
15
9
9a
14
14
8a
11
8
16
8b
8c
8d
16a
11
11a
11b
11c

Lower Frame Parts List

Item	Part No.	Quantity	Description
1	17.00750	1	Pin, Cam Lever
2	901937	2	Washer-Flat 1/2" SAE
3	904246	2	Spring Pin, 5/32 x 1-1/4
4	17.00700.7	1	Cam Lever
5	907194	1	Snap Ring
6	07.17764	1	Spring
7	17.00688.3	1	Frame, Center w/Decals
8	17.00762	1	Pin, Lift Link
8a	09.72010	1	Pin-Roll 3/8 x 2
8b	902191	1	Car Bolt 1/2 x 1-1/2
8c	900506	1	Lock Washer 1/2
8d	900369	1	Hex Nut 1/2
9	17.00852.7	1	Link, Lift with Zerks
9a	905081	2	Zerk 1/4-28, Long
10	17.00721	2	Pin, Axle Pivot 115 Rake
10a	900538	2	Zerk, 1/4-28
10b	902928	2	Hex Head Bolt 1/2 x 1-1/4
10c	901650	2	Hex Lock Nut 1/2
11	17.00592.7	2	Spindle w/Bracket
11a	903306	8	Hex Head Bolt 1/2 x 1-1/2
11b	901937	16	Flat Washer 1/2 SAE
11c	901650	8	Hex Lock Nut 1/2
12	17.00798	1	Hydraulic Cylinder 2-1/2 x 8" w/Stroke Control
12a	17.00210	1	Seal Kit - 2-1/2" Hyd. Cylinder
12b	17.00111	1	Stroke Control
13	17.00183.7	1	Lock, Transport
13a	906827	1	Pin, 1/4x3 Cotter
14	09.73603	3	Pin, Pivot
15	09.73502	6	Pin, Hair - 1" Pin
16	17.00689.3	1	Axle Frame
16a	900538	1	Zerk 1/4-28, Taper
17	904605	1	Hex Head Bolt, 1/2-13x4 - Gr 8
18	901650	1	Hex Lock Nut, 1/2-13
19	01.73266	2	Key, 3/8x3 Undersize
20	07.06701	1	Gasket, Rubber

Upper Frame & Hitch

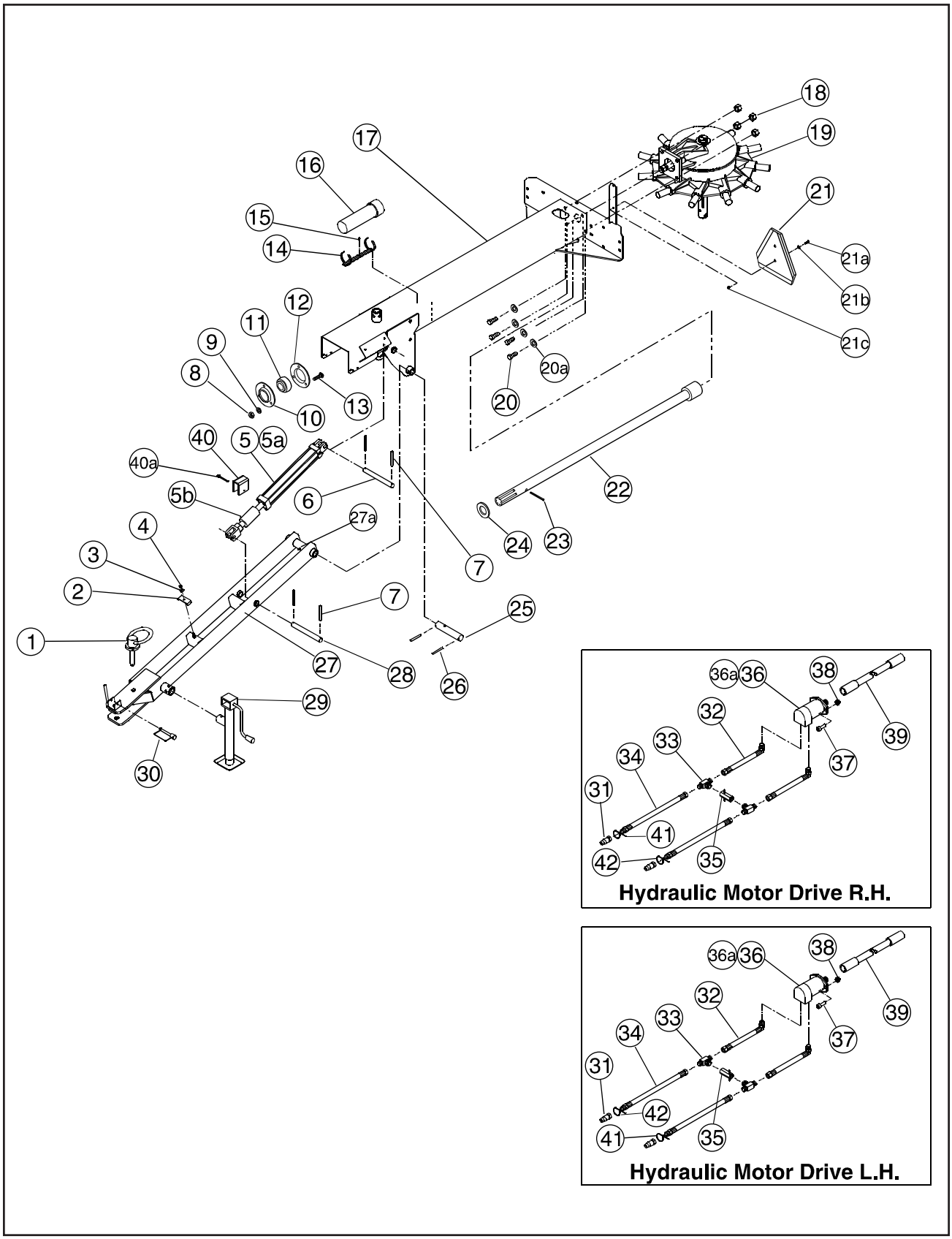

Upper Frame & Hitch Parts List

Item	Part No.	Quantity	Description
1	17.00778	1	Pin, Hitch 3/4 x 4-1/2
2	322848B1.7	1	Clip - Hydraulic Line
3	901105	1	Washer - Flat 3/8" SAE
4	906400	1	Hex Nut - LK 3/8-16 Nylon
5	17.00797	1	Cylinder, 2 x 3 Hydraulic w/Stroke Control
5a	65.10083	1	Seal Kit - 2" Hydraulic Cylinder
5b	17.00111	1	Stroke Control
6	17.00731	1	Pin - Front Frame Cylinder
7	902294	4	Pin Roll 3/16 x 1-1/2
8	900366	3	Hex Nut 3/8-16
9	900504	3	Washer, 3/8 Lock
10	17.00055	1	Flangette, Relube w/Zerk
11	17.00056	1	Bearing w/Collar, 1-3/8
12	17.00057	1	Flangette, Relube Mating
13	903692	3	Bolt, 3/8-16 x 1 Carriage
14	907216	1	Bracket - OP Manual Storage Tube
15	09.71112	2	Hex Head Bolt, G5 5/16-18 x 3/4 SPEC
16	907215	1	Tube - OP Manual Storage, Black
17	17.00780.3	1	Frame, Front 115 Rake with Safety Decals
18	906402	4	Hex Nut - LK 5/8-11 Nylon
19		1	Gearbox (See pages 24 and 26)
20	904253	4	Hex Head Bolt, G5 5/8-11 x 2"
20a	904814	4	Washer, Flat, 5/8 HT
21	907224	1	SMV Emblem w/Metal Backing
21a	904863	2	Hex Head Bolt 1/4-20 x 3/4 Gr 5
21b	900493	2	Flat Washer 1/4 SAE
21c	904092	2	Hex Lock Nut 1/4-20
22	17.00736	1	Shaft, Drive 115 PTO
23	09.72003	1	Pin - Roll 3/16 x 2
24	09.73300	1	Machine Bushing 1-3/8 x 2-1/8 14 GA
25	17.00730	1	Pin - Hitch Pivot
26	09.72010	2	Pin - Roll 3/8 x 2
27	17.00729.3	1	Hitch - Rake 115 w/Decals
27a	900538	1	Zerk, 1/4-28 Taper
28	17.00761	1	Pin - Hitch Cylinder
29	17.00386	1	Jack, 2000 lb, 15" Side Crank
30	17.00779	1	Pin, Lock 1/4 x 2-1/2

Upper Frame & Hitch (continued)

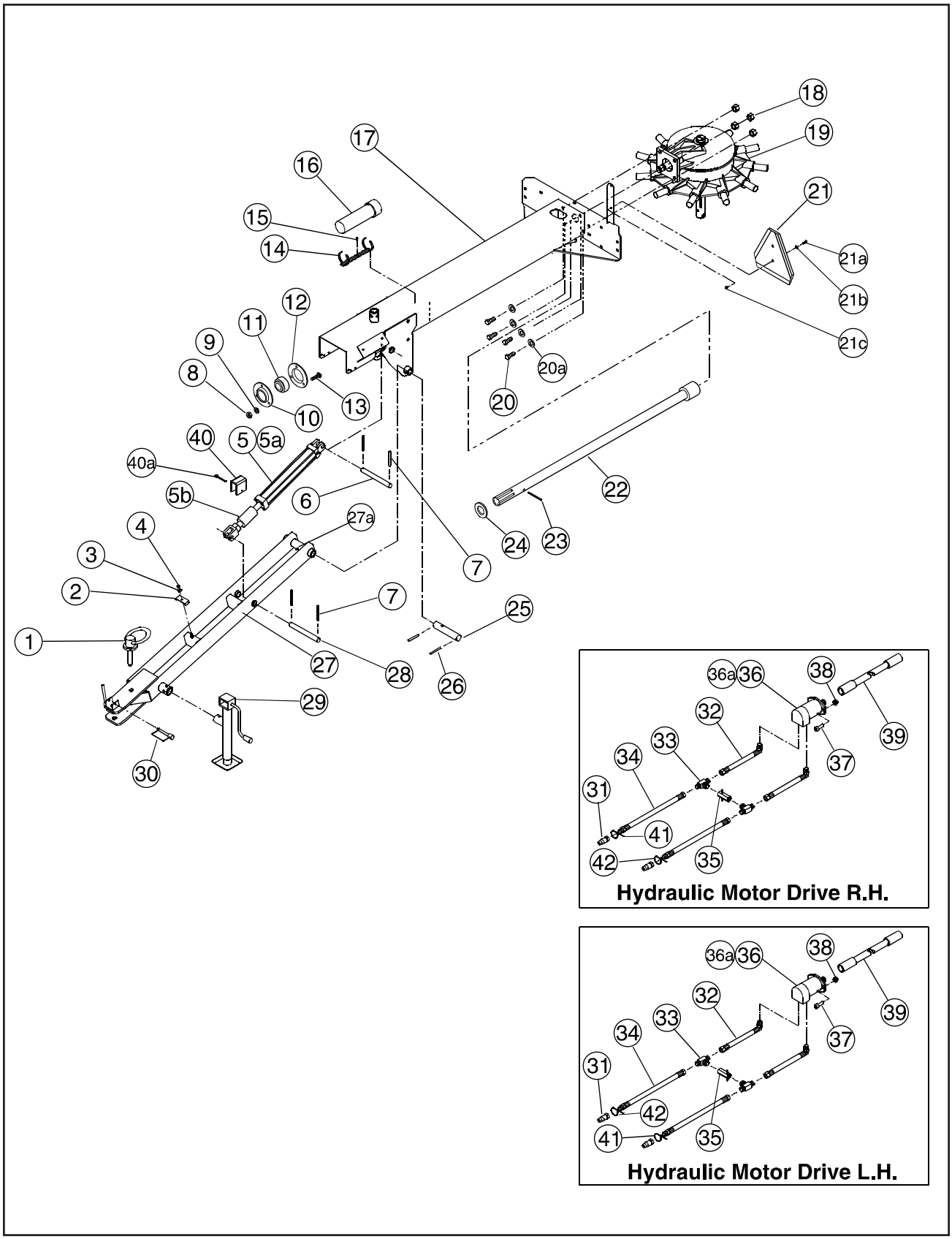

Upper Frame & Hitch Parts List (continued)

Item	Part No.	Quantity	Description
31	09.74158	2	Coupler - Quik 3/4-16 ORB Male
32	17.00423	2	Hose 1/2
33	09.74129	2	Tee - Branch 37° Flare-O-Ring Adj Thread 7/8-14
34	17.00819	2	Hose, Hyd 1/2 x 66
35	17.00923	1	Valve - Check SAE 10 Alumpopt
36	17.00796.7	1	Hydraulic Motor Char-Lynn Splined
36a	17.00486	1	Seal Kit
37	907371	2	Socket Head Bolt G8, 1/2 x 1-3/4"
38	906401	2	Hex Head Nut LK 1/2-13 Nylon
39	17.00738	1	Shaft, Drive 115 Hydraulic
40	17.00795.7	1	Lock - Transport 2 x 3 Cylinder
40a	906827	1	Pin - Cotter 1/4 x 3
41	17.00564	1	Tie, Cable, Blue
42	17.00565	1	Tie, Cable, Red

Tandem Axle, Wheels & Tires

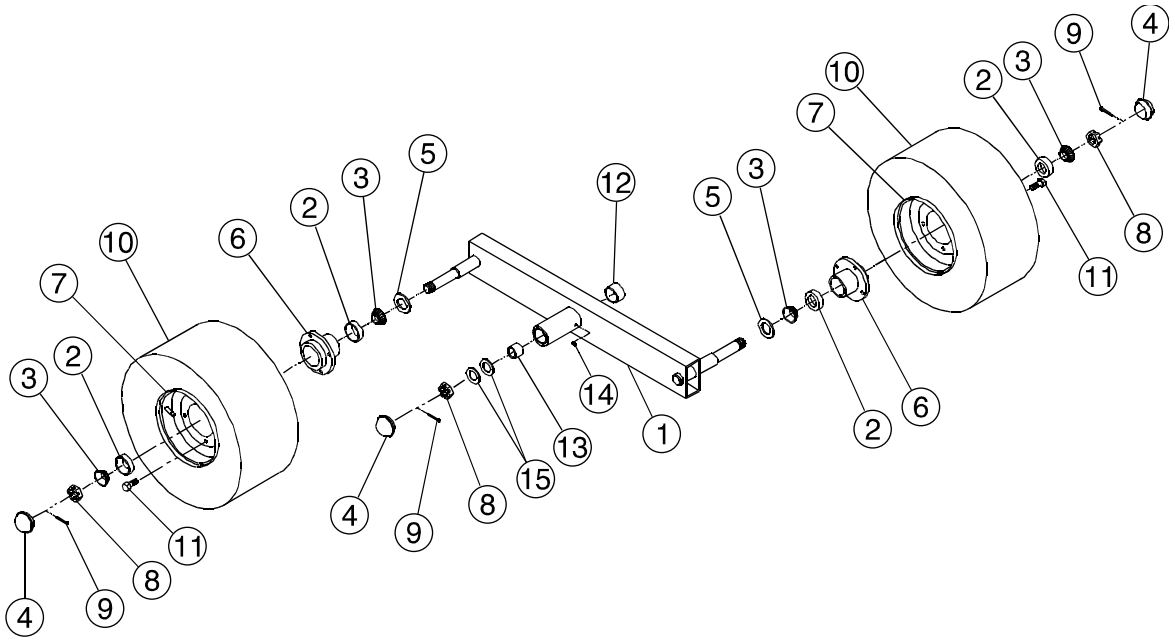

Tandem Axle, Wheels & Tires Parts List

Item	Part No.	Quantity	Description
1	17.00598.7	2	Tandem Axle - Rake (Includes Items 12, 13, 14)
2	902578	8	Bearing Cup
3	902568	8	Bearing Cone, 1.0000
4	17.00142	6	Hub Cab
5	17.00141	4	Seal, Oil, 1-1/4
6	17.00451	4	Hub Assembly (Includes Items 2, 3, 4, 5, 11)
7	17.00453	4	Wheel, 8 x 7, 4-Bolt
8	17.00143	6	Nut Slotted Jam GR5 1-14 UNS
9	900534	6	Pin, Cotter 3/16 x 1-1/4
10	17.00908	4	Wheel & Tire Assembly 18 x 9.5 x 8/10 ply Tube Type
	17.00940	4	Tire & Tube, 18 x 9.5 x 8/10 ply
	17.00936	4	Tube for 18 x 9.5/8.5 x 8
11	09.74007	16	Bolt, Wheel
12	01.76445	2	Bushing 1-1/2 x 1-3/4 x 1
13	900060	2	Bushing 1.00 4 x 1.25 15 x 1
14	900538	2	Grease Zerk 1/4-28 Taper
15	01.73881	4	Washer, Flat - 1 x 1.5 x .07

Tandem Stops (Prior to S/N 17.15712)

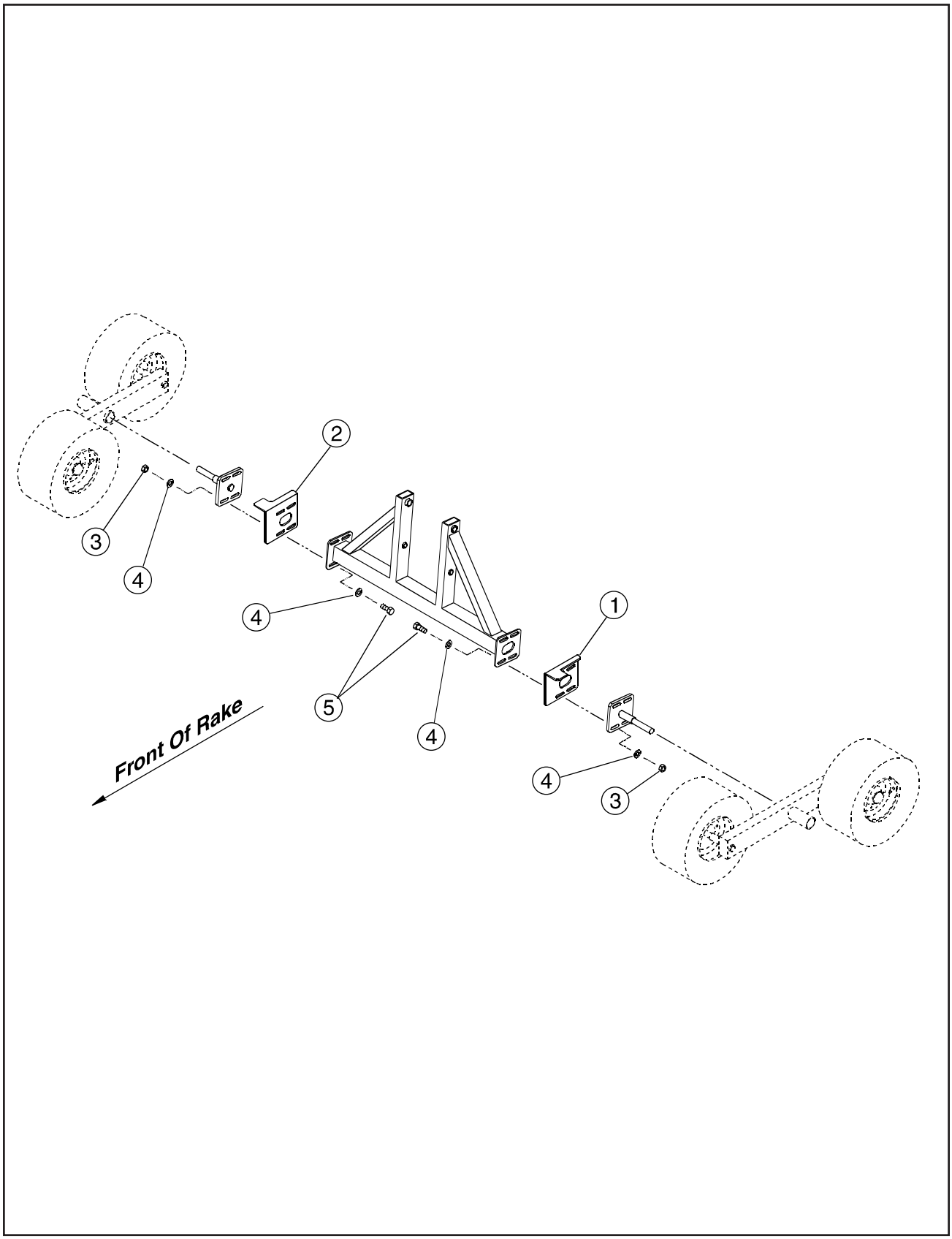

victor

Tandem Stops Parts List (Prior to S/N 17.15712)

Item	Part No.	Quantity	Description
1	17.00902.7	1	Stop - LH
2	17.00903.7	1	Stop - RH
3	901650	8	Nut, Center Lock 1/2"
4	901937	16	Flat Washer 1/2"
5	903518	8	Bolt 1/2 x 1-3/4

Guards

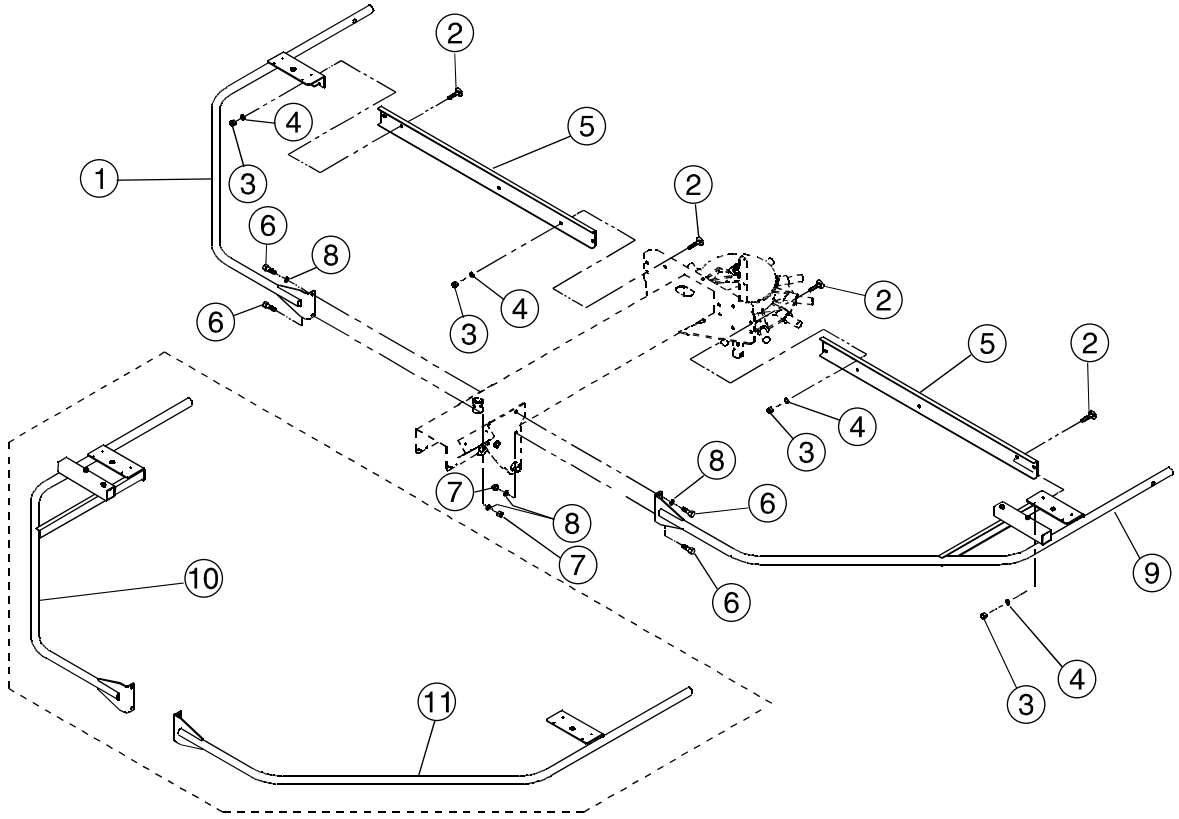

For R.H. Rake

Guards Parts List

Item	Part No.	Quantity	Description
1	17.00794.3	1	Guard w/o Adjuster LH Rake w/Reflector
2	903695	12	Bolt, 1/2-13 x 1-1/4 Carriage
3	900369	14	Nut, 1/2-13 Hex
4	900506	16	Washer, 1/2 Lock
5	17.00812.3	2	Guard Support w/Reflector
6	902928	4	Bolt, 1/2-13 x 1-1/4 Hex
7	900369	2	Nut, 1/2-13 Hex
8	900506	4	Washer, 1/2 Lock
9	17.00792.3	1	Guard w/Adjuster LH Rake w/Decals
10	17.00793.3	1	Guard w/Adjuster RH Rake w/Decals
11	17.00883.3	1	Guard w/o Adjuster RH Rake w/Reflector

Swath Screen

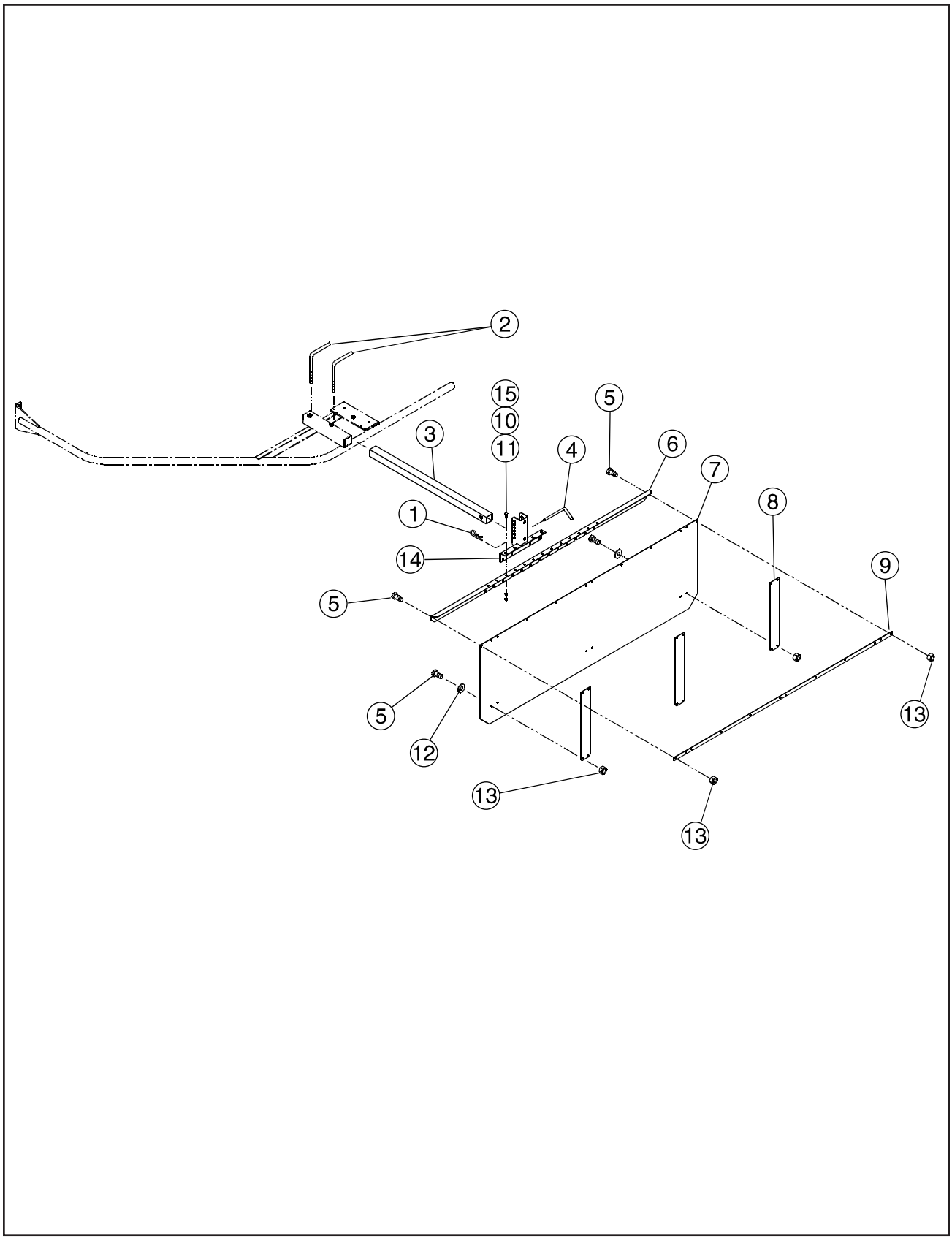

Swath Screen Parts List

Item	Part No.	Quantity	Description
1	904508	1	Pin, Hair, 1/8 x 2-9/16 Znc
2	17.00069	2	Pin, Threaded
3	17.00072.7	1	Adjuster - Swath Screen
4	02.16500	1	Pin, Pull
5	904863	18	Hex Head Bolt, GR5 1/4 x 3/4" (Standard Screen)
	904863	25	Hex Head Bolt, GR5 1/4 x 3/4" (Optional 8 Ft Screen)
6	17.00752.7	1	Angle - Swath Screen (Standard Screen)
	17.00868.7	1	Angle - Swath Screen (Optional 8 Ft Screen)
7	17.00048	1	Screen - Swath (Standard Screen)
	17.00821	1	Screen - Swath (Optional 8 Ft Screen)
8	17.00081.7	3	Stiffener - Swath Screen (Standard Screen)
	17.00081.7	4	Stiffener - Swath Screen (Optional 8 Ft Screen)
9	17.00082.7	1	Strip - Clamp (Standard Screen)
	17.00869.7	1	Strip - Clamp (Optional 8 Ft Screen)
10	900503	8	Washer - Lock 5/16"
11	900365	8	Hex Nut - 5/16-18
12	900493	6	Washer Flat 1/4" SAE (Standard Screen)
	900493	8	Washer Flat 1/4" SAE (Optional 8 Ft Screen)
13	904092	18	Hex Nut, LK 1/4" Ny-lok Cntr (Standard Screen)
	904092	25	Hex Nut, LK 1/4" Ny-lok Cntr (Optional 8 Ft Screen)
14	17.00811	1	Support - Swath Screen w/Reflector
15	903689	8	Carriage Bolt G5 5/16 x 3/4"
	17.00777	1	Swath Screen Complete - Standard (Consists Of Items: 5 thru 15)
	17.00862	1	Swath Screen Complete - Opt 8 Ft (Consists Of Items: 5 thru 15)

Tine Arms

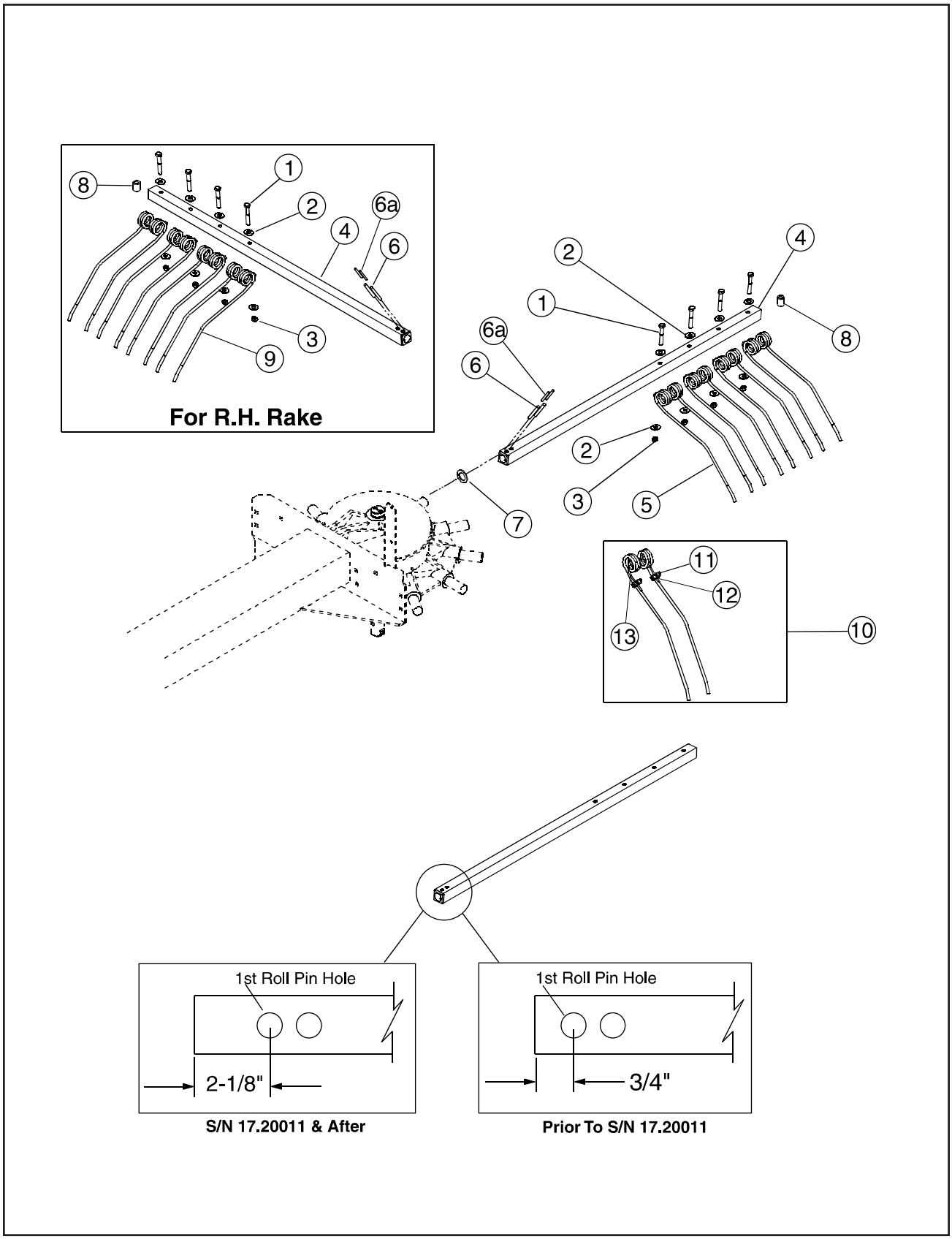
8
1
2
6a
4
6
3
9
For R.H. Rake
2
4
1
8
6a
6
2
3
5
7
11
12
13
10
1st Roll Pin Hole
2-1/8"
S/N 17.20011 & After
1st Roll Pin Hole
3/4"
Prior To S/N 17.20011

Tine Arms Parts List

Item	Part No.	Quantity	Description
1	903855	44	Hex Head Bolt G5 1/2 x 3-1/2"
2	900497	88	Washer, Flat 1/2"
3	907399	44	Hex Nut LK 1/2-13 Nylon FL
4	17.00776.3	11	Tine Arm 50.98" 115 w/Tag (3/4" to 1st Roll Pin Hole)
			(See Note 1)
	17.01007	11	Tine Arm 51.00" (2-1/8" to 1st Roll Pin Hole) (See Note 2)
5	17.00763	44	Tine, Rake LH
6	907342	22	Pin, Spring 12 x 60MM
6a	907341	22	Pin, Spring 7 x 60MM
7	09.73300	11	Machine Bushing 1-3/8 x 2-1/8 x 14 Ga
8	17.00865	11	Spacer, Tine Bolt
9	17.00764	44	Tine, Rake, RH
10	17.00945	44	Tine Saver Kit
11	900601	88	Cable Clamp, 5/16
12	900503	176	Lock Washer, 5/16
13	333225B1	44'	Cable - Coated
			Note 1: Units Built Prior To S/N 17.20011 That Have Not Been Updated. Always Measure Location Of 1st Roll Pin Hole In Tine Arms Before Ordering.
			Note 2: Units Built S/N 17.20011 & After Or Prior Built Units That Have Been Updated. Always Measure Location Of 1st Roll Pin Hole In Tine Arms Before Ordering.

Hydraulic Lift System

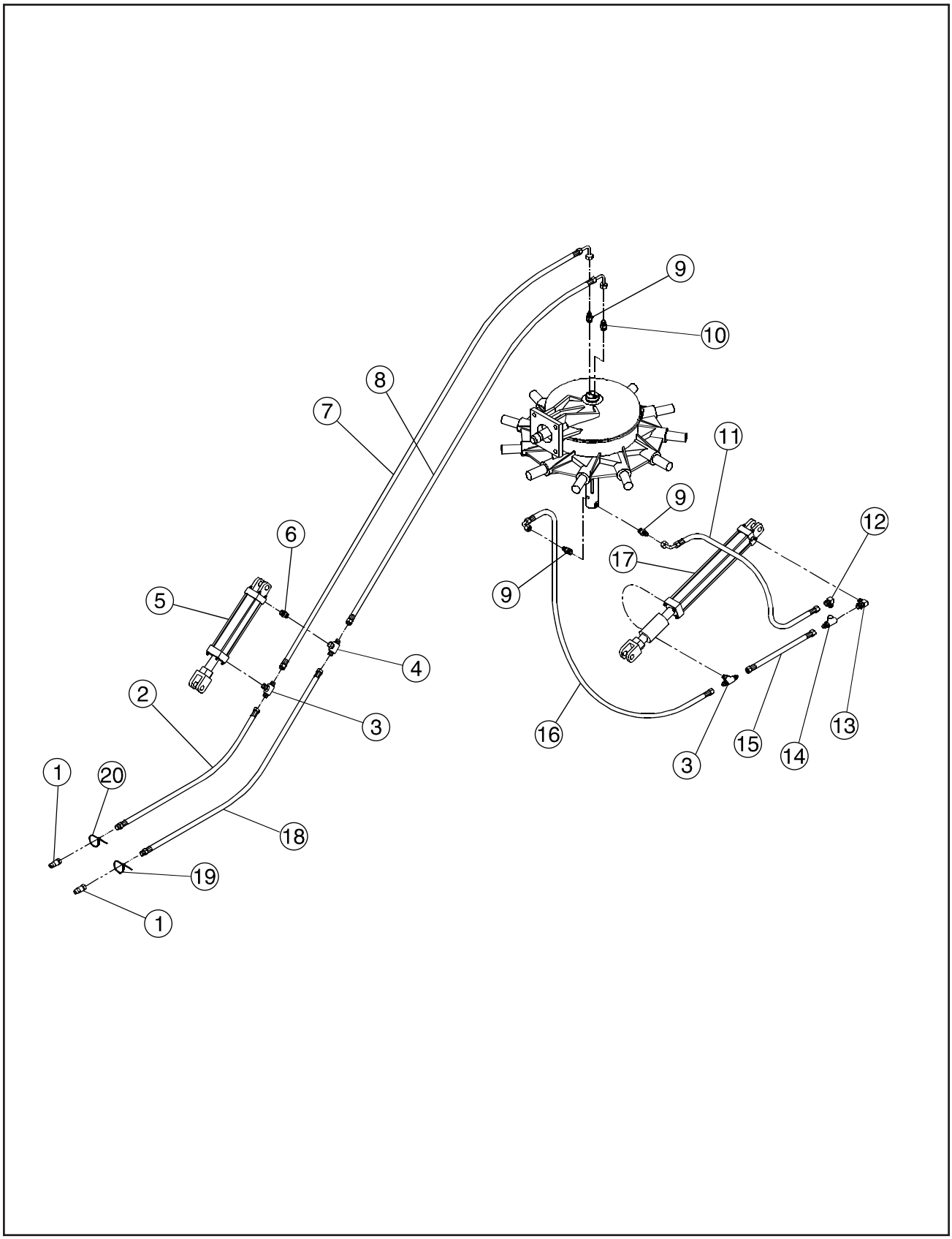

Hydraulic Lift System Parts List

Item	Part No.	Quantity	Description
1	09.74158	2	Coupler - Quik 3/4-16 ORB Male
2	17.00791	1	Hydraulic Hose 3/8 x 90"
3	907183	1	Tee - Branch 37° Flare, ORB 9/16-18
4	907182	1	Tee - Branch 37° Flare, Swivel, 9/16-18
5	17.00797	1	Cylinder, 2 x 3 Hydraulic w/Stroke Control
	65.10083	1	Seal Kit - 2" Hydraulic Cylinder
	17.00111	1	Stroke Control
6	907205	1	Restrictor - .031
7	17.00788	1	Hydraulic Hose 3/8 x 83"
8	17.00789	1	Hydraulic Hose 3/8 x 77"
9	907181	3	Connector - 37° Flare x ORB, 9/16-18, Special Length
10	907203	1	Restrictor - .062
11	17.00786	1	Hydraulic Hose 3/8 x 31"
12	07.17848	1	Elbow - 90°
13	907232	1	Elbow - 90° Male
14	17.00863	1	Valve - Pilot Check
15	17.00864	1	Hydraulic Hose 1/4 x 14"
16	17.00787	1	Hydraulic Hose 3/8 x 20.5"
17	17.00798	1	Cylinder, 2.5 x 8 w/Stroke Control
	17.00210	1	Seal Kit - 2-1/2" Hyd. Cylinder
	17.00111	1	Stroke Control
18	17.00790	1	Hydraulic Hose 3/8 x 96.5"
19	17.00566	1	Tie, Cable, Yellow
20	17.00567	1	Tie, Cable, Green

Transport Lights & Wiring

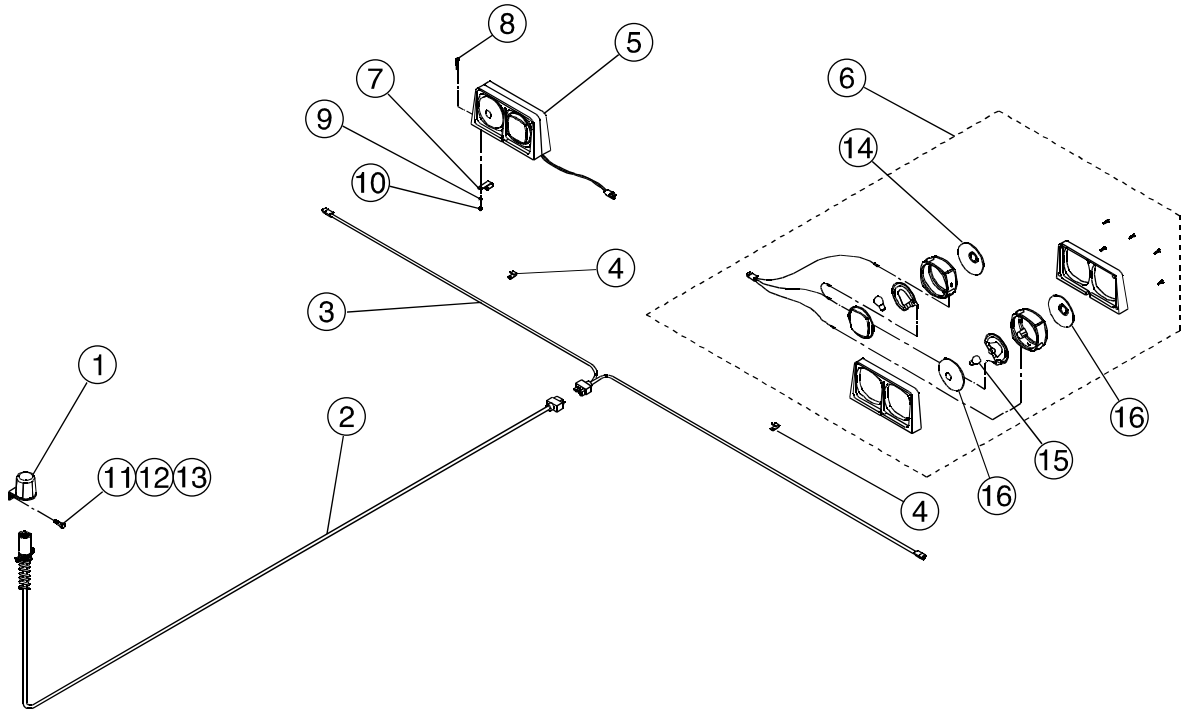

Transport Lights & Wiring Parts List

Item	Part No.	Quantity	Description
1	16.20165	1	Holder - Plug Storage
2	17.00845	1	Harness, Lights, 14' Lead
3	17.00846	1	Harness, Lights, Wishbone
4	09.74400	8	Frame Clip - 1/4"
5	16.10743	1	Light, Dual Lamp, Amber/Red - RH
6	16.10742	1	Light, Dual Lamp, Amber/Red - LH
7	05.73375	2	Clamp, Hose .625ID Dbl
8	903826	8	Hex Head Bolt, G5 1/4 x 1-1/2
9	904007	2	Washer, Flat, 1/4"
10	904092	8	Hex Nut, LK 1/4" Ny-lok Cntr
11	904863	2	Hex Head Bolt - G5 1/4 x 3/4"
12	904092	2	Hex Nut - LK 1/4" Ny-lok Cntr
13	900493	2	Washer - Flat 1/4" SAE
14	907311	2	Lens, Red
15	21.20917	4	Bulb - #1157
16	907312	4	Lens, Amber

Decals & Trim

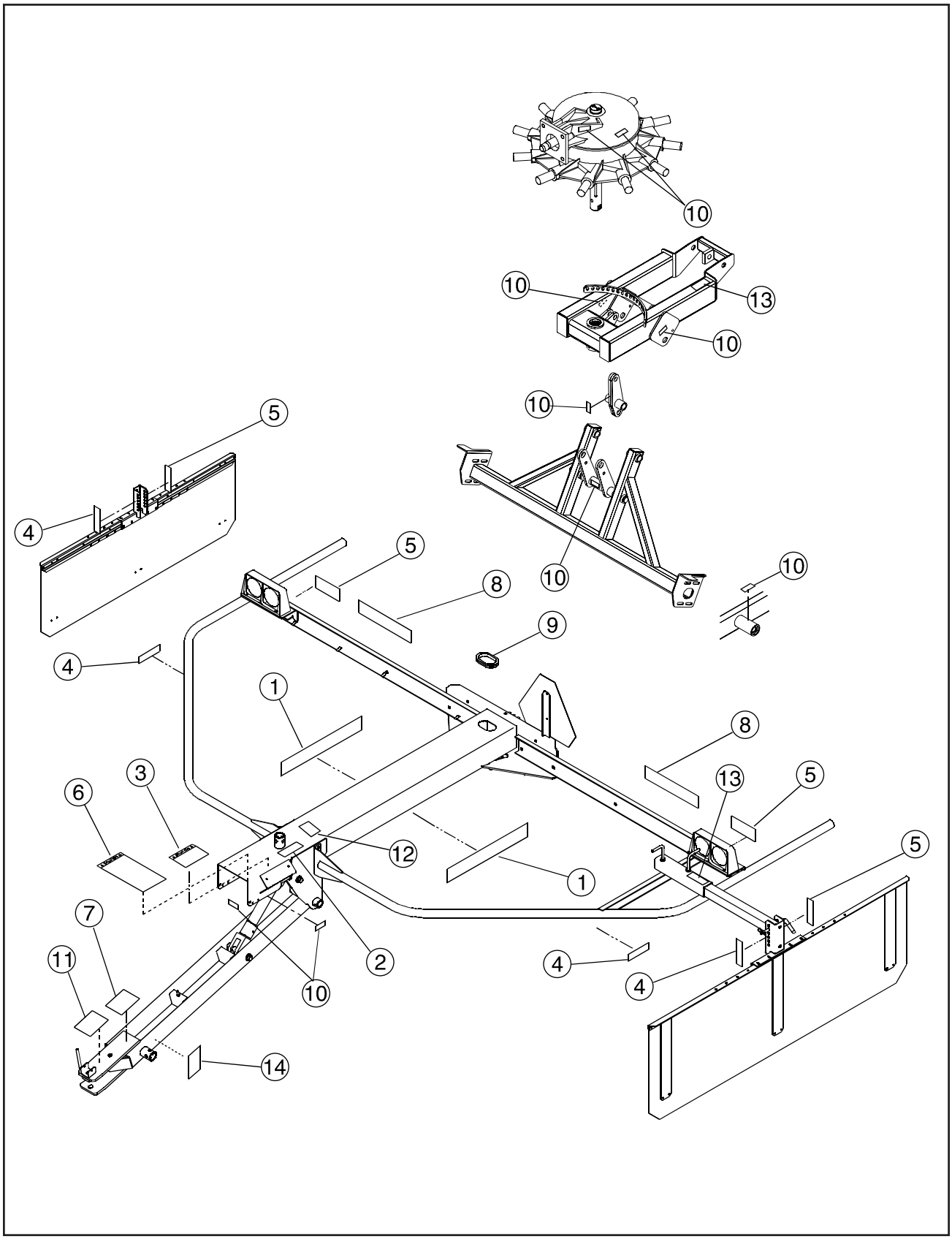

Decals & Trim Parts List

Item	Part No.	Quantity	Description
1	41.00008	2	Decal - Victor 115
2	17.00469	1	Decal - Patent
3	16.20178	1	Decal - Before Operating
4	907220	3	Decal - Yellow 2 x 9 Retro Reflective
5	907219	3	Decal - Red 2 x 9 Retro Reflective
6	16.20177	1	Decal - Rotating Drive Line
7	340248B1	1	Decal - Caution 540 RPM
8	907221	2	Decal - Orange 2 x 9 Flourescent
9	11.77710	AR"	Trim
10	907510	10	Decal, Grease
11	17.01148	1	Decal, Important, Lift Links
12	21.09024	1	Decal, Warning, Hydraulic Fluid
13	17.01149	2	Decal, Danger, Rotating Arms
14	17.01155	1	Decal, Warning, Foot Crushing

Gear Box - Left Hand Rake

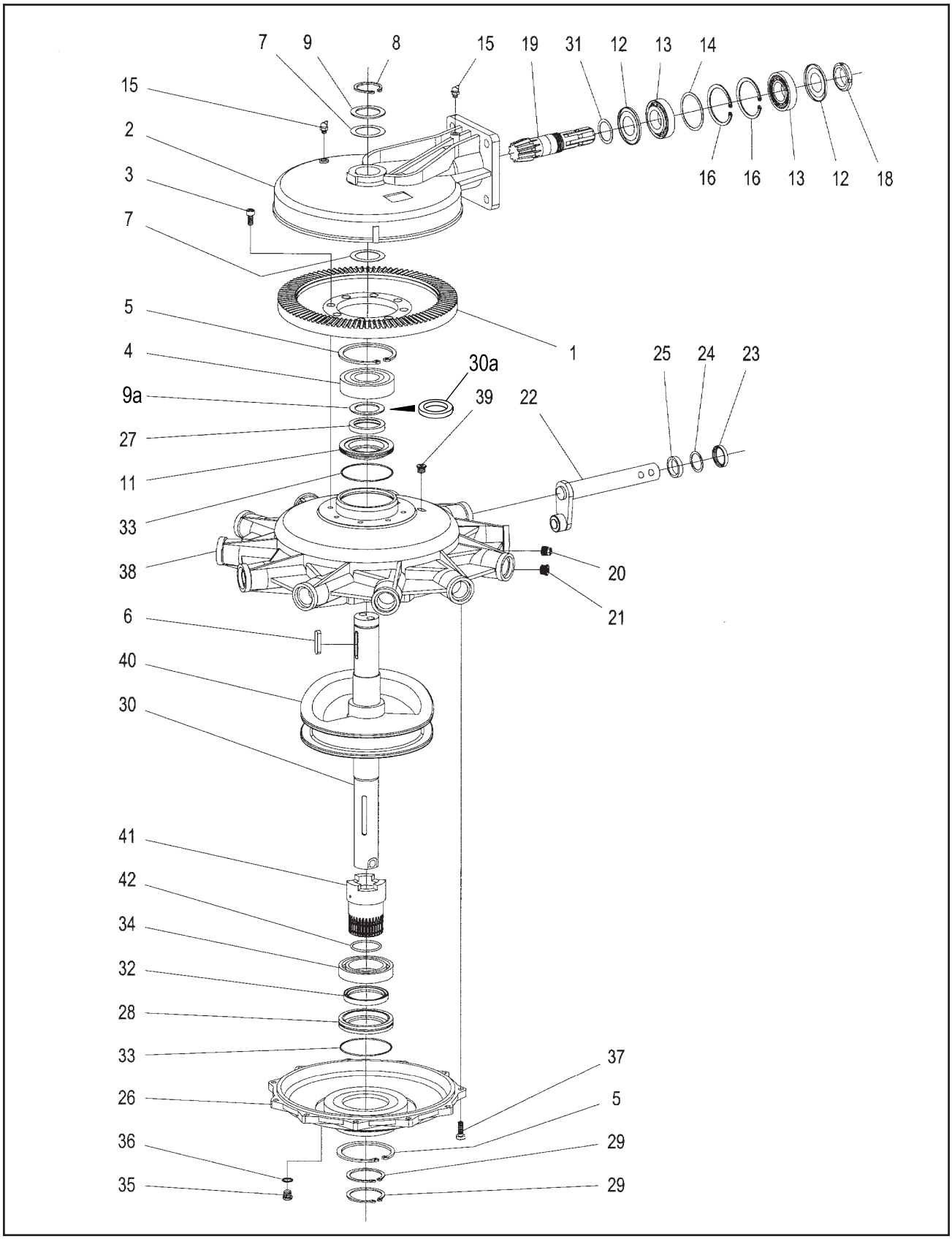

Gear Box - Left Hand Rake Parts List

Item	Part No.	Quantity	Description
1	17.00826	1	Gear - Bevel Ring
2	17.00827	1	Cover - Top Casting
3	907204	8	Bolt - SOCHD M10 x 22 Gr 8.8
4	907186	1	Bearing - Ball
5	907187	2	Snap Ring
6	17.00828	1	Parallel Key 10 x 8 x 50
7	17.00829	2	Shim Kit
8	907188	1	Snap Ring
9	17.00830	1	Shim
9a	17.00830	1	Shim (S/N Prior to 17.20011 That Have Not Been Updated)
11	17.01010	1	Cover - Seal
12	17.00832	2	Protective Washer
13	16.10732	2	Bearing - Cup & Cone
14	16.10730	1	Shim Kit
15	907189	2	Grease Zerk, 45° M10 x 1
16	16.10731	2	Snap Ring
18	907190	1	Nut, Bearing, M40 x 1.5
19	17.00834	1	Pinion Shaft
20	16.10526	1	Plug, Hex Head, 1/2" Gas
21	907191	1	Plug, SOCHD, 1/2" Gas
22	17.00836 (*)	NLA	Shaft, Tine Arm (2-3/4" Housing To End Of Shaft) (8-7/8" T. L.)
	17.01012	11	Shaft, Tine Arm (4" Housing To End Of Shaft) (10-1/4" T. L.)
23	907192	11	Oil Seal, 35 x 45 x 7
24	17.00837	11	Shim, 35.2 x 43.8 x 1
25	17.00838	11	Spacer
26	17.00839	1	Cover, Gearbox
27	907193	1	Double Lip Seal, 55 x 72 x 10
28	17.00840	1	Cover, Seal
29	907194	2	Snap Ring
30	17.00800 (**)	NLA	Shaft, Center (w/o Spacer - Item 30a In Gear Box Assembly)
	17.01008	1	Shaft, Center (w/Spacer - Item 30a In Gear Box Assembly)
30a	17.01009	1	Spacer
31	17.00844	1	Shim
32	907195	1	Oil Seal, 70 x 90 x 10
33	907196	2	O-Ring
34	907197	1	Bearing
35	907198	1	Oil Drain Plug, Magnetic, 3/8" Gas
36	907199	1	Washer, Plug, 17 x 22 x 1.5
37	907200	11	Bolt, Hex, M10 x 30 Gr 8.8
38	17.00841	1	Housing, Gearbox
39	907201	1	Plug, Non-Magnetic, 3/8" Gas
40	17.00842	1	Cam
41	17.00843	1	Sleeve, Splined
42	907202	1	O-Ring
43	17.00833	1	Shim Kit
	17.00705	NLA	Gearbox - Rake 11-Arm CCW LH
	17.00981	1	Gearbox - Rake 11-Arm CCW LH HD
			* Order 17.01012 Tine Arm Shaft & 17.01007 Tine Arm
			** Order 17.01008, 17.01009, 17.01010 & 907193

Gear Box - Right Hand Rake

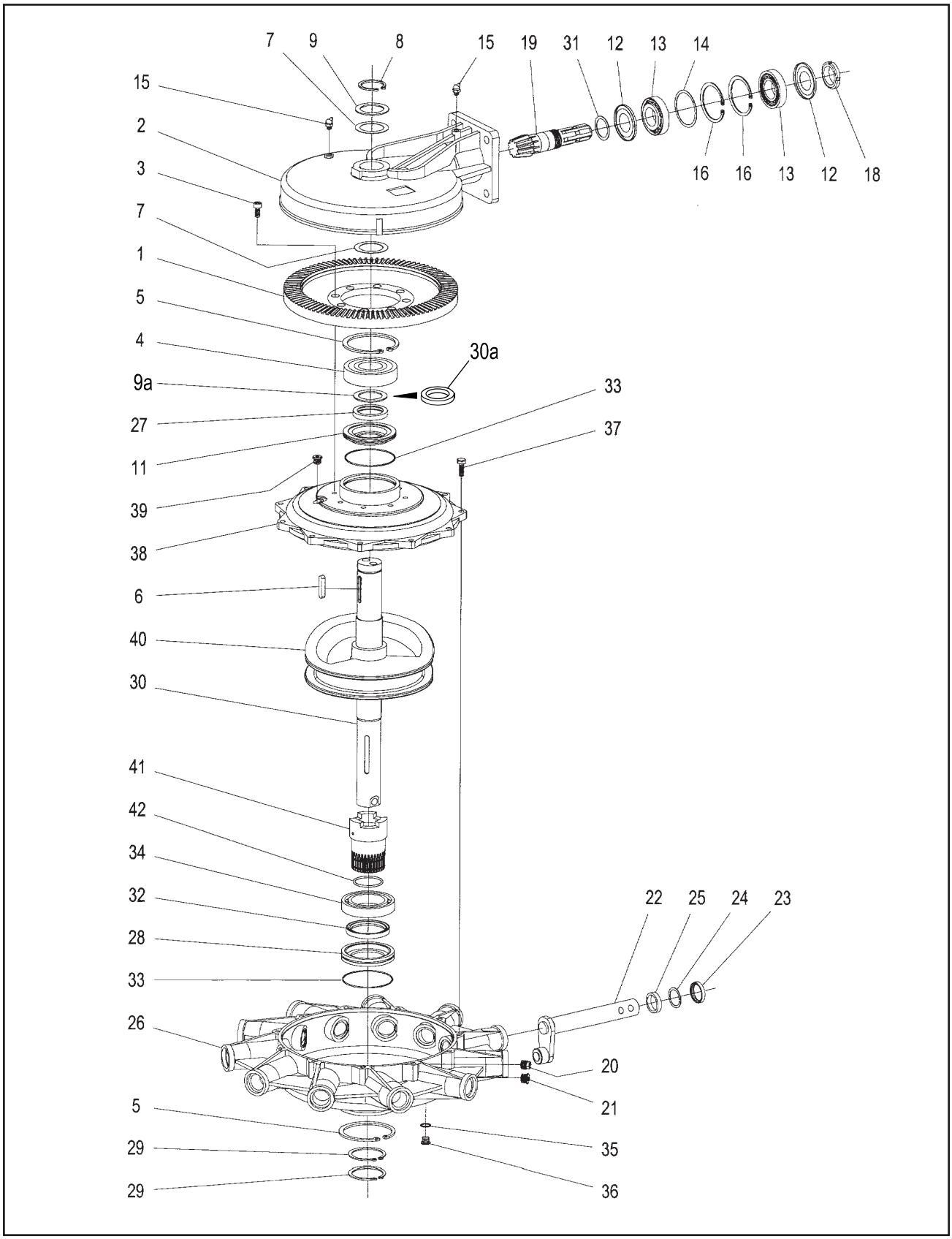

Gear Box - Right Hand Rake Parts List

Item	Part No.	Quantity	Description
1	17.00826	1	Gear - Bevel Ring
2	17.00827	1	Cover - Top Casting
3	907204	8	Bolt - SOCHD M10 x 22 Gr 8.8
4	907186	1	Bearing - Ball
5	907187	2	Snap Ring
6	17.00828	1	Parallel Key 10 x 8 x 50
7	17.00829	2	Shim Kit
8	907188	1	Snap Ring
9	17.00830	1	Shim
9a	17.00830	1	Shim (S/N Prior to 17.20011 That Have Not Been Updated)
11	17.01010	1	Cover - Seal
12	17.00832	2	Protective Washer
13	16.10732	2	Bearing - Cup & Cone
14	16.10730	1	Shim Kit
15	907189	2	Grease Zerk, 45G.M10 x 1
16	16.10731	2	Snap Ring
18	907190	1	Nut, Bearing, M40 x 1.5
19	17.00834	1	Pinion Shaft
20	16.10526	1	Plug, Hex Head, 1/2" Gas
21	907191	1	Plug, SOCHD, 1/2" Gas
22	17.00836 (*)	NLA	Shaft, Tine Arm (2-3/4" Housing To End Of Shaft) (8-7/8" T. L.)
	17.01012	11	Shaft, Tine Arm (4" Housing To End Of Shaft) (10-1/4" T. L.)
23	907192	11	Oil Seal, 35 x 45 x 7
24	17.00837	11	Shim, 35.2 x 43.8 x 1
25	17.00838	11	Spacer
26	17.00841	1	Housing, Gearbox
27	907193	1	Double Lip Seal, 55 x 72 x 10
28	17.00840	1	Cover, Seal
29	907194	2	Snap Ring
30	17.00800 (**)	NLA	Shaft, Center (w/o Spacer - Item 30a In Gear Box Assembly)
	17.01008	1	Shaft, Center (w/Spacer - Item 30a In Gear Box Assembly)
30a	17.01009	1	Spacer
31	17.00844	1	Shim
32	907195	1	Oil Seal, 70 x 90 x 10
33	907196	2	O-Ring
34	907197	1	Bearing
35	907199	1	Washer, Plug, 17 x 22 x 1.5
36	907198	1	Oil Drain Plug, Magnetic, 3/8" Gas
37	907200	11	Bolt, Hex, M10 x 30 Gr 8.8
38	17.00839	1	Cover, Gearbox
39	907201	1	Plug, Non-Magnetic, 3/8" Gas
40	17.00842	1	Cam
41	17.00843	1	Sleeve, Splined
42	907202	1	O-Ring
43	17.00833	1	Shim Kit
	17.00704	NLA	Gearbox - Rake 11-Arm CW RH
	17.00982	1	Gearbox - Rake 11-Arm CW RH HD
			* Order 17.01012 Tine Arm Shaft & 17.01007 Tine Arm
			** Order 17.01008, 17.01009, 17.01010 & 907193

PTO Shaft

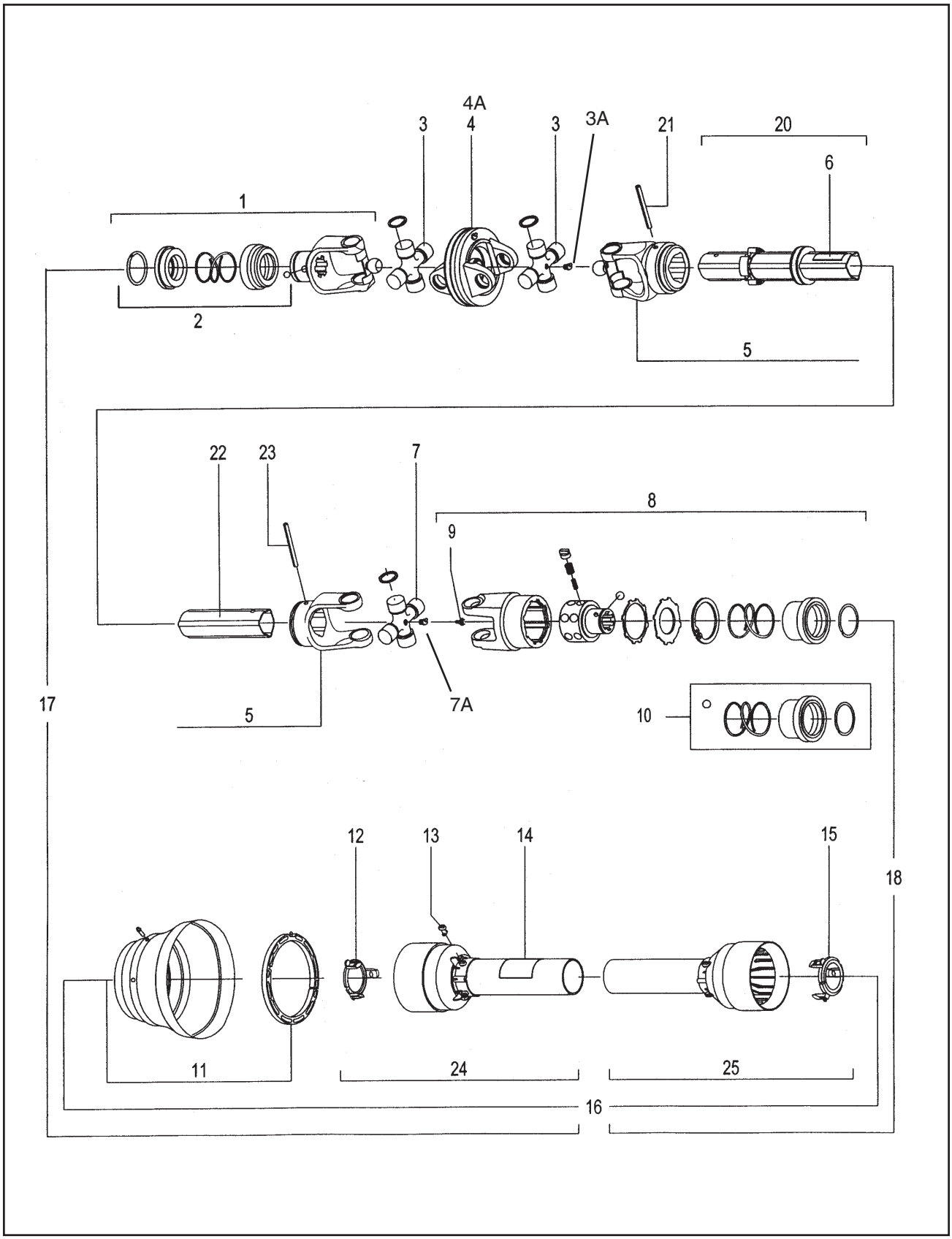

PTO Shaft Parts List

Item	Part No.	Quantity	Description
1	17.00896	1	Yoke, Tractor, Complete
2	907305	1	Repair Kit, Slide Lock, Tractor Yoke
3	17.00946	2	Cross Kit
3a	907303	2	Grease Zerk, M8 x 1, 45 Degree
4	17.00897	1	Yoke, Double
4a	09.72600	1	Grease Zerk, M8 x 1, Straight
5	17.00952	1	Inner Shaft Kit (Includes Item 16)
6	331639B2	1	Decal, Shield Missing
7	17.00947	1	Cross Kit
7a	907303	1	Grease Zerk, M8 x 1, 45 Degree
8	17.00898	1	Clutch, Radial Pin
9	907304	1	Grease Fitting, M6 x 1
10	907306	1	Repair Kit, Slide Lock, Clutch
11	17.00899	1	Guard, CV
12	17.00948	1	Retaining Collar, Outer Tube
13	22.00458	6	Bolt, Retainer
14	329594B2	1	Decal, Danger, Rotating Drive Line
15	17.00949	1	Retaining Collar, Inner Tube
16	17.00900	1	Complete Guard w/Instruction Manual
17	17.00894	1	Tractor Half, PTO w/Guard
18	17.00895	1	Implement Half, PTO w/Guard
19	907307	1	PTO Maintenance Manual
20	17.00956	1	Tube, Female
21	17.00960	1	Roll Pin, Female Tube
22	17.00957	1	Tube, Male
23	17.00961	1	Roll Pin, Male Tube
24	17.00958	1	Guard, Tractor Half
25	17.00959	1	Guard, Implement Half
	17.00950	1	Tube, Female & Knuckle Assembly (Includes Items 6, 20 & 21)
	17.00951	1	Tube, Male & Knuckle Assembly (Includes Items 22 & 23)
	17.00799	1	PTO Complete

Part Number Index

Part No.	Page
01.73266	3
01.73881	9
01.76445	9
02.16500	15
05.73375	21
07.06701	3
07.17764	3
07.17848	19
09.71112	5
09.72003	5
09.72010	3, 5
09.72600	29
09.73300	5, 17
09.73502	3
09.73603	3
09.74007	9
09.74129	7
09.74158	7, 19
09.74400	21
11.77710	23
16.10526	25, 27
16.10730	25, 27
16.10731	25, 27
16.10732	25, 27
16.10742	21
16.10743	21
16.20165	21
16.20177	23
16.20178	23
17.00048	15
17.00055	5
17.00056	5
17.00057	5
17.00069	15
17.00072.7	15
17.00081.7	15
17.00082.7	15
17.00111	3, 5, 19
17.00141	9
17.00142	9
17.00143	9
17.00183.7	3
17.00210	3, 19
17.00386	5
17.00423	7
17.00451	9
17.00453	9
17.00469	23
17.00486	7
17.00564	7
17.00565	7
17.00566	19
17.00567	19
17.00592.7	3
17.00598.7	9
17.00688.3	3
17.00689.3	3
17.00700.7	3
17.00704	27
17.00705	25
17.00721	3
17.00729.3	5
17.00730	5
17.00731	5
17.00736	5
17.00738	7
17.00750	3
17.00752.7	15
17.00761	5
17.00762	3
17.00763	17
17.00764	17
17.00776.3	17
17.00777	15
17.00778	5
17.00779	5
17.00780.3	5
17.00786	19
17.00787	19
17.00788	19
17.00789	19
17.00790	19
17.00791	19
17.00792.3	13
17.00793.3	13
17.00794.3	13
17.00795.7	7
17.00796.7	7
17.00797	5, 19
17.00798	3, 19
17.00799	29
17.00800	25, 27
17.00811	15
17.00812.3	13
17.00819	7
17.00821	15
17.00826	25, 27
17.00827	25, 27
17.00828	25, 27
17.00829	25, 27
17.00830	25, 27
17.00832	25, 27
17.00833	25, 27
17.00834	25, 27
17.00836	25, 27
17.00837	25, 27
17.00838	25, 27
17.00839	25, 27
17.00840	25, 27
17.00841	25, 27
17.00842	25, 27
17.00843	25, 27
17.00844	25, 27
17.00845	21
17.00846	21
17.00852.7	3
17.00862	15
17.00863	19
17.00864	19
17.00865	17
17.00868.7	15
17.00869.7	15
17.00883.3	13
17.00894	29
17.00895	29
17.00896	29
17.00897	29
17.00898	29
17.00899	29
17.00900	29
17.00902.7	11
17.00903.7	11
17.00908	9
17.00923	7
17.00936	9
17.00940	9
17.00945	17
17.00946	29
17.00947	29
17.00948	29
17.00949	29
17.00950	29
17.00951	29
17.00952	29
17.00956	29
17.00957	29
17.00958	29

Part Number Index (continued)

Part No.	Page
17.00959	29
17.00960	29
17.00961	29
17.00981	25
17.00982	27
17.01007	17
17.01008	25, 27
17.01009	25, 27
17.01010	25, 27
17.01012	25, 27
17.01148	23
17.01149	23
17.01155	23
21.09024	23
21.20917	21
22.00458	29
322848B1.7	5
329594B2	29
331639B2	29
333225B1	17
340248B1	23
41.00008	23
65.10083	5, 19
900060	9
900365	15
900366	5
900369	3, 13
900493	5, 15, 21
900497	17
900503	15, 17
900504	5
900506	3, 13
900534	9
900538	3, 5, 9
900601	17
901105	5
901650	3, 11
901937	3, 11
902191	3
902294	5
902568	9
902578	9
902928	3, 13
903306	3
903518	11
903689	15
903692	5
903695	13
903826	21
903855	17
904007	21
904092	5, 15, 21
904246	3
904253	5
904508	15
904605	3
904814	5
904863	5, 15, 21
905081	3
906400	5
906401	7
906402	5
906827	3, 7
907181	19
907182	19
907183	19
907186	25, 27
907187	25, 27
907188	25, 27
907189	25, 27
907190	25, 27
907191	25, 27
907192	25, 27
907193	25, 27
907194	3, 25, 27
907195	25, 27
907196	25, 27
907197	25, 27
907198	25, 27
907199	25, 27
907200	25, 27
907201	25, 27
907202	25, 27
907203	19
907204	25, 27
907205	19
907215	5
907216	5
907219	23
907220	23
907221	23
907224	5
907232	19
907303	29
907304	29
907305	29
907306	29
907307	29
907311	21
907312	21
907341	17
907342	17
907371	7
907399	17
907510	23

© 2005 by Miller-St. Nazianz, Inc.