Art's Way

Since 1956

Art's-Way Manufacturing Co., Inc.

Model X700
Manure Spreader

Operator's Manual & Illustrated Parts List
690740

Issued July 2020

This symbol means ATTENTION! BECOME ALERT! YOUR SAFETY IS INVOLVED. The message that follows the symbol contains important information about your safety. Carefully read the message. Make sure you fully understand the causes of possible injury or death.

IF THIS MACHINE IS USED BY AN EMPLOYEE, IS LOANED, OR IS RENTED, MAKE SURE THAT THE OPERATOR UNDERSTANDS THE TWO INSTRUCTIONS BELOW.

BEFORE THE OPERATOR STARTS THE ENGINE:

GIVE INSTRUCTIONS TO THE OPERATOR ON SAFE AND CORRECT USE OF THE MACHINE.
MAKE SURE THE OPERATOR READS AND UNDERSTANDS THE OPERATOR'S MANUAL FOR THIS MACHINE.

WARNING

IMPROPER OPERATION OF THIS MACHINE CAN CAUSE INJURY OR DEATH.

BEFORE STARTING THE ENGINE, DO THE FOLLOWING:

1. READ THE OPERATOR'S MANUAL.

2. READ ALL SAFETY DECALS ON THE MACHINE.

3. CLEAR THE AREA OF OTHER PERSONS.

4. LEARN AND PRACTICE SAFE USE OF MACHINE CONTROLS IN A SAFE AND CLEAR AREA BEFORE YOU OPERATE THIS MACHINE ON A JOB SITE.

It is your responsibility to observe pertinent laws and regulations and to follow manufacturer's instructions on machine operation and maintenance.

See your Authorized Art's-Way Manufacturing Co., Inc. dealer or
Art's-Way Manufacturing Co., Inc. for additional operator's manuals, illustrated parts catalogs, and service manuals.

TO THE OWNER

Congratulations on the purchase of your new Art's-Way Manure Spreader. You have selected a top quality machine that is designed and built with pride to ensure you have many years of efficient and reliable service.

Many people have worked on the design, production, and delivery of this Manure Spreader. The information in this manual is based on the knowledge, study, and experience through years of specializing in the manufacturing of farm machinery. This manual is designed to provide you with important information regarding safety, maintenance, and machine operation so you can and will get the best possible performance from your Manure Spreader.

Even if you are an experienced operator of this or similar equipment, we ask that you read this manual before operating this Manure Spreader. The way you operate, adjust, and maintain this unit will have much to do with its successful performance. Any further questions you may have about this product of Art's-Way equipment should be directed to your local Art's-Way dealer or to Art's-Way Manufacturing Co., Inc. Armstrong, Iowa, 50514, (712) 864-3131.

SPECIFICATIONS AND DESIGN ARE SUBJECT TO CHANGE WITHOUT NOTICE

Art's-Way Manufacturing Co., Inc. is continually making product improvements. In doing so, we reserve the right to make changes and/or add improvements to our products without obligation for the equipment previously sold.

Modifications to this Manure Spreader may affect the performance, function, and safety of its operation. Therefore, no modifications are to be made without the written permission of Art's-Way Manufacturing Co., Inc. Any modification made without the written permission of Art's-Way Mfg. Co. Inc. shall void the warranty of this product.

In the interest of continued safe operation of this Manure Spreader, pay particular attention to the safety alert symbol(s) throughout this manual.

Art's-Way Manufacturing Co., Inc. STATEMENT OF PRODUCT LIABILITY

Art's-Way Manufacturing Co., Inc. recognizes its responsibility to provide customers with a safe and efficient product. Art's-Way Manufacturing Co., attempts to design and manufacture its products in accordance with all accepted engineering practices effective at the date of design. This statement should not be interpreted to mean that our products will protect against the user's own carelessness or failure to follow common safety practices nor will Art's-Way Manufacturing Co., be liable for any such act. In addition, Art's-Way Manufacturing Co., assumes no liability for any altered product or any modified product by users or anyone other than an authorized dealer.

IMPORTANT WARRANTY INFORMATION

The warranty for this Manure Spreader appears on page 6 of this manual. In order to establish proper warranty registration, the Warranty Registration must be completed and returned to the factory. Failure to comply with this requirement will result in invalidating the warranty!

LIMITATIONS OF THIS MANUAL

This manual contains operating instructions for your X700 Manure Spreader only. Any mention of other machinery in this manual other than the X700 Manure Spreader is for reference only. This manual does not replace nor is it to be used for any machinery that may be attached to or used in conjunction with the X700 Manure Spreader.

PARTS & SERVICE

As the purchaser of your new spreader, it is very important to consider the following factors:

A. Original Quality

B. Availability of Service Parts

C. Availability of Adequate Service Facilities

Art's-Way Manufacturing Co., Inc. has an excellent dealership network ready to answer any questions you may have about your spreader. Parts for your machine may be ordered through our dealers. When placing a parts order, please have the **model** and **serial number** ready. This will allow the dealer to fill your order as quickly as possible.

For your convenience, we have provided this space for you to record your model number, serial number, and the date of purchase, as well as your dealer's name and address.

TABLE OF CONTENTS

TO THE OWNER 1
SPECIFICATIONS AND DESIGN ARE SUBJECT TO CHANGE WITHOUT NOTICE 1
Art's-Way Manufacturing Co., Inc. STATEMENT OF PRODUCT LIABILITY 1
IMPORTANT WARRANTY INFORMATION 1
LIMITATIONS OF THIS MANUAL 1
PARTS & SERVICE 2
TABLE OF CONTENTS 3-5
SAFETY FIRST 7
NOTICES OF DANGER, WARNING, AND CAUTION 7
Safety Instructions 8
GENERAL 8
BEFORE OPERATING 9
DURING OPERATION 9
MAINTENANCE SAFETY 9
HYDRAULIC SAFETY 10
TRANSPORTATION SAFETY 10
STORAGE SAFETY 10
TIRE SAFETY 11
ASSEMBLY SAFETY 11

TABLE OF CONTENTS

NAME	PAGE
~~OPERATOR'S INSTRUCTIONS: MANURE SPREADER~~~~~	13
~~ILLUSTRATED PARTS LIST: MANURE SPREADER~~~~~	25
TONGUE TO BOX ASSEMBLY	26
TONGUE ASSEMBLY	28
RUNNING GEAR TO BOX ASSEMBLY	30
RUNNING GEAR ASSEMBLY	32
HUB ASSEMBLY	34
WHEEL ASSEMBLY (USED MILITARY)	36
WHEEL ASSEMBLY (FLOATATION)	38
DRIVELINE ASSEMBLY	40
35R DRIVE SHAFT WITH GUARD (TO BEATERS)	42
SLIP SLEEVE SHAFT ASSY (TO TONGUE)	44
1000 RPM 1-3/8 X 21 SPLINE PTO W/OVERRUN CLUTCH	46
1000 RPM 1-3/4 X 20 SPLINE PTO W/OVERRUN CLUTCH	48
1000 RPM 1-3/8 X 21 SPLINE C-V PTO W/CLUTCH PACK	50
1000 RPM 1-3/4 X 20 SPLINE C-V PTO W/CLUTCH PACK	52
MAIN FLOOR ASSEMBLY	54
REAR GANG TO BOX ASSEMBLY	56
REAR GANG ASSEMBLY	58
GEARBOX ASSEMBLY	60
APRON CHAIN AND DRIVE ASSEMBLY	62
SLOP GATE ASSEMBLY	64
BEATER TO BOX ASSEMBLY	66
BEATERS ASSEMBLY	68
BEATER GEARS ASSEMBLY	70
ROCK GAURD ASSEMBLY	72
HYDRAULIC COMPONENT ASSEMBLY	74
GREASE ASSEMBLY	76
LIGHTS ASSEMBLY	78
BULB LIGHTS KIT	80
LED LIGHTS KIT	82
LED LIGHTS WIRING (OLD)	84
LED LIGHTS WIRING (NEW)	85
MANUAL ASSEMBLY	86
FLASHING ASSEMBLY	88
DECAL PLACEMENT	90
SCALE ASSEMBLY	92
APRON HYDRAULICS	94
SLOP GATE HYDRAULICS	96

SAFETY FIRST

SAFETY INSTRUCTIONS

"A careful operator is the best insurance against an accident." Quote from the National Safety Council.

Most accidents can be prevented if the operator:

1. Fully understands how the machine functions.
2. Can anticipate situations which may produce problems.
3. Can make necessary corrections before problems develop.

THIS SYMBOL MEANS ATTENTION!

BECOME ALERT!

YOUR SAFETY IS INVOLVED!

- Universal Safety Alert Symbol

The American Society of Agricultural Engineers has adopted the Universal Safety Alert Symbol as a way to identify areas of potential danger if the equipment is not operated correctly. Please be alert whenever you see this symbol in the manuals or on your spreader.

Art's-Way Manufacturing Co., Inc. strives to make our equipment as safe as possible. The Art's-Way X700 Manure Spreader conforms to applicable safety standards at the time of manufacturing. A safety conscious equipment operator makes an effective accident-prevention program complete.

Safety features and instructions for the spreader are detailed in the Safety Guidelines section of this Operator's Manual. It is the responsibility of the owner to ensure that all operators read and understand the manual before they are allowed to operate the Spreader. (Occupational Safety and Health Administration (OSHA) regulations 1928.57).

NOTICES OF DANGER, WARNING, AND CAUTION

Signal Words: Note the use of signal words **DANGER**, **WARNING**, and **CAUTION** on the spreader and in this manual. The appropriate signal word for each has been selected using the following guidelines:

⚠ DANGER

Indicates a hazardous situation which, if not avoided, will result in death or serious injury.

⚠ WARNING

Indicates a hazardous situation which, if not avoided, could result in death or serious injury.

⚠ CAUTION

Indicates a potentially hazardous situation which, if not avoided, could result in minor or moderate injury.

NOTICE

NOTICE is used to address practices not related to physical injury.

SAFETY INSTRUCTIONS

Safety instructions (or equivalent) signs indicate specific safety-related instructions or procedures.

Note: Contains additional information important to a procedure and will be found within the regular text body of this manual.

SAFETY INSTRUCTIONS

GENERAL

Most work related accidents are caused by failure to observe basic safety rules or precautions. An accident can often be avoided by recognizing potentially hazardous situations before an accident occurs. As you operate and maintain the Spreader you must be alert to potential hazards. You should also have the necessary training, skills, and tools to perform any assembly procedure.

Improper operation and/or maintenance of this unit could cause a dangerous situation that results in injury or death.

Do not use this unit until you read and understand the information contained in this manual. Do not use this equipment for anything other than its intended purpose.

Safety precautions and warnings are provided in this manual and on the unit. If these hazard warnings are not heeded, bodily injury or death could occur to you or to other persons.

Art's-Way Manufacturing Co., Inc. cannot anticipate every possible circumstance that might involve a potential hazard. The warnings in this manual and on the product are, therefore, not all-inclusive. If a method of operation not specifically recommended by us is used, you must satisfy yourself that it is safe for you and for others. You should also ensure that the unit will not be damaged or be made unsafe by the methods that you choose.

The information, specifications, and illustrations in this manual are based on the information that was available at the time this material was written and can change at any time.

Safety Alert Symbols

This is the safety alert symbol. It is used to alert you to potential personal injury hazards. Obey all safety messages that follow this symbol to avoid possible injury or death.

This manual contains DANGERS, WARNINGS, CAUTIONS, NOTICES, SAFETY INSTRUCTIONS, and NOTES which must be followed to prevent the possibility of improper service, damage to the equipment, personal injury, or death. The following key words call the readers attention to potential hazards.

Hazards are identified by the "Safety Alert Symbol" and followed by a signal word such as "DANGER", "WARNING", or "CAUTION".

SAFETY INSTRUCTIONS

Remember:
"The Best Operator is a Safe Operator"

CAUTION

Read and understand the operator's manual and all the safety decals before operating the spreader. Review all safety instructions with all operators annually.

BEFORE OPERATING

SAFETY INSTRUCTIONS

Do not wear loose fitting clothing as it may catch in moving parts.

Make sure all guards and shields are installed, including the tractor power take-off (PTO) master shield, before starting or operating the spreader.

Be sure that the correct implement driveline parts are used and that they are properly secured.

Lower the lifter wheels when the spreader is not in use.

Install safety chain when attaching the spreader to the tractor.

Clear the area of bystanders, especially children, when making repairs, adjustments, or performing maintenance on the spreader.

Do not allow riders.

Put all tractor and machine controls in “neutral” and disengage the PTO before starting. Follow the starting instructions according to the OEM tractor manual.

Operate the spreader only while seated on the tractor seat.

Make sure the unit is adequately supported with safety blocks or safety stands when changing tires or performing maintenance.

DURING OPERATION

⚠ CAUTION

Entanglement Hazard
Keep hands, feet, hair, and clothing away from moving parts. Wait for all movement to stop before approaching equipment.
Before making adjustments:

1. **Shut off the tractor,**
2. **Set parking brake,**
3. **Put machine in neutral, and**
4. **Remove key while making adjustments.**

Keep all shields and guards in place and in good working condition.

Keep all bystanders, especially children, away from the spreader while in operation.

Do not allow riders while the spreader is in operation.

Do not attempt to unclog, clean, or adjust the spreader while it is running.

Stay away from overhead power lines. Electrocution can occur even without direct contact.

Keep all hydraulic lines, fittings, and couplers tight and free of leaks. (Refer to Safety Guidelines – Hydraulic Safety).

Use caution when ascending or descending on the spreader. Wet shoes or boots are slippery.

MAINTENANCE SAFETY

SAFETY INSTRUCTIONS

Follow all operating, maintenance, and safety instructions found in this Manual.

Before servicing, adjusting, repairing, or unclogging the machine, always make sure the tractor engine is stopped, key in your pocket, the machine is lowered to the ground, all controls are placed in neutral, the parking brake is set, and all the moving parts have stopped.

Use sufficient tools, jacks, and hoists that have the capacity for the job.

Use support blocks or safety stands when changing tires or performing maintenance.

Follow good shop practices of keeping the service area clean and dry, and use adequate light for the job at hand.

Before applying pressure to the hydraulic system, make sure all lines, fittings, and couplers are tightly secured and in good condition.

Make sure all shields/guards are in place and properly secured when performing maintenance.

HYDRAULIC SAFETY

SAFETY INSTRUCTIONS

Follow all operating, maintenance, and safety instructions found in this Manual.

Make sure components in the hydraulic system are kept clean and in good working condition.

Relieve pressure from the hydraulic system before servicing or disconnecting from the tractor.

Keep all hydraulic lines, fittings, and couplers tightly secured and free of leaks.

Replace any worn, cut, abraded, flattened, or crimped hoses.

Do not make any temporary repairs to the hydraulic lines, fittings, or hoses using tape, clamps, or cement. The hydraulic system operates under extremely high pressure and temporary repairs may fail suddenly and create a hazardous/dangerous situation.

Wear proper hand and eye protection when searching for a high-pressure hydraulic leak. Use a piece of wood or cardboard as a backstop instead of hands to identify and isolate a leak. If injured by a concentrated high-pressure stream of hydraulic fluid, seek medical attention immediately. Serious infection or toxic reaction can develop if hydraulic fluid penetrates the surface of the skin.

Before applying pressure to the system, make sure all components are tight and that the hydraulic lines, hoses, and couplings are not damaged.

TRANSPORTATION SAFETY

SAFETY INSTRUCTIONS

Follow all operating and safety instructions found in this manual when transporting this equipment.

Make sure the spreader complies with all local regulations regarding transporting equipment on public roads and highways.

Make sure the Slow Moving Vehicle (SMV) emblem and all lights and reflectors required by local highway and transportation authorities are properly in place, clean, and clearly visible to traffic.

Do not allow riders on any machinery during transport.

Make sure the spreader is securely attached to the tractor and install a safety chain to the spreader.

Make sure the tractor brake pedals are latched together.

Do not exceed 20 mph (32 km/h) when transporting the spreader. Always reduce speed on rough roads and surfaces, or when going down inclines.

Use caution when turning and always use the turn signals on the tractor to indicate your turning intentions to the other traffic.

The weight of the trailed machine should NEVER exceed the weight of the towing vehicle.

Check all clearances carefully whenever the machine is towed.

Lower the elevator into the transport position before transporting the spreader on the highway.

Stay away from overhead obstructions and power lines during transport. Electrocution can occur even without direct contact.

STORAGE SAFETY

SAFETY INSTRUCTIONS

Follow all operating and safety instructions found in this manual when storing this equipment.

Store the spreader in an area away from human activity.

Do not permit children to play on or around the stored machine at any time.

Make sure that the spreader is stored in an area with a firm and level base to prevent the machine from tipping or sinking into the ground.

Block the wheels to prevent the machine from rolling.

TIRE SAFETY

SAFETY INSTRUCTIONS

Follow all operating and safety instructions found in this manual when working around tires.

Have only a qualified tire dealer or tire repair service perform tire repairs.

Do not attempt to install a tire on a wheel or rim unless you have the proper equipment and experience to do the job.

Do not substitute tires with a lesser road rating and/or capacity for the original equipment tires.

⚠ WARNING

Explosive Force Hazard
Tire replacement, repair, and/or maintenance should be done by a qualified tire dealer or qualified repair service.

Failure to follow proper procedures when installing a tire on a wheel or rim can produce an explosive force that will result in serious injury or death.

Do not attempt to install a tire without proper equipment and experience to perform the job.

ASSEMBLY SAFETY

SAFETY INSTRUCTIONS

Follow all assembly, operating, and safety instructions found in this manual when assembly this equipment.

Use adequate manpower to perform assembly procedures safely.

Assemble the spreader in an area with sufficient space to maneuver the largest components and allow easy access to all sides of the machine.

Use only forklifts, lift cranes, jacks, and tools with sufficient capacity for the loads.

Do not allow spectators, especially children, in the working area.

THIS PAGE
LEFT
INTENTIONALLY
BLANK

OPERATOR'S INSTRUCTIONS: MANURE SPREADER

SAFETY

UNDERSTAND SAFETY WORDS AND SYMBOLS

THIS SAFETY ALERT SYMBOL is used in this manual whenever personal safety is involved and means **ATTENTION! BECOME ALERT!** It stresses an attitude of **"HEADS UP"** for safety. Read and understand all pages in this manual that bear this safety symbol and…**TAKE TIME TO BE CAREFUL!**

The Signal Word or Message areas of all safety decals are color coded to indicate the level of hazard.

CAUTION: Is used to direct attention to unsafe practices, and uses the color yellow.

WARNING: Denotes a specific potential hazard, and uses the color yellow or orange.

DANGER: Denotes a most serious specific potential hazard, and uses the color red.

READ THE OPERATORS MANUAL

Any person who will be operating or maintaining this manure spreader should first read and understand this manual and all safety warnings on the unit.

This instruction manual should always be available to those responsible for the operation and maintenance of this manure spreader. It is the owner's responsibility to provide this safety information to his operators and employees.

Any person who does not understand the safety and operation instructions contained in this manual should not be considered qualified to operate this manure spreader.

FOLLOW SAFETY INSTRUCTIONS

Specialized procedures and instructions are required and must be adhered to when working on this equipment. Failure to follow the instructions contained in this manual could result in severe personal injury, death, and/or product or property damage. Personnel when operating or maintaining this equipment must use all applicable safety procedures such as OSHA requirements, regional and local safety codes and requirements, safe working practices, and good judgment.

SAFETY

OPERATING SAFETY PRECAUTIONS

WHEN THE SPREADER IS IN OPERATION, IT HAS MANY MOVING PARTS, WHICH COULD CAUSE SEVERE INJURY OR DEATH TO PERSONS COMING IN CONTACT WITH THESE PARTS. TO HELP AVOID SERIOUS ACCIDENTS, THE FOLLOWING GUIDELINES MUST BE FOLLOWED.

- **BE SURE ALL SAFETY SHIELDS** are in place before operating, including any truck and driveline shields. Exposed machinery, due to missing shielding, can cause severe injury or death. Repair or replace any damaged or missing shielding.

- **NEVER PUT ARMS OR FEET INSIDE UNIT,** or near discharge areas, nor climb on or in the spreader while it is running. NEVER allow anyone to position themselves over or near the top, or near the discharge area of the spreader while it is running. Rotating beaters, shafting, belts, pulleys, and sprockets can grab clothing or create pinch points, which can cause severe injury or death to the operator or bystanders. Always stop engine and remove ignition key so that the spreader cannot be accidentally turned on while inspection, servicing, repairing, or cleaning the spreader.

- **NEVER ATTEMPT TO RELEASE JAMMED MATERIALS OR CLEAN MATERIALS** from any area of the spreader of discharge without turning the spreader off first. Materials can hide moving parts and stopped parts can start unexpectedly, causing severe injury. Always stop engine and remove ignition key before attempting to remove jammed material or clean the spreader.

- **DO NOT ALLOW OPERATION OF THIS UNIT BY AN INEXPERIENCED OR UNQUALIFIED PERSON.** Keep all unqualified people away from spreader during operation. Operators of this unit must be alert and use good judgment at all times and must have fully read and understand this manual.

- **DO NOT WEAR LOOSE OR FLOPPY CLOTHING** while operating this unit. Loose clothing may become entangled in moving machinery.

- **BE SURE THE INSIDE OF SPREADER IS CLEAR** of any obstructions before loading.

- **SHOULD A PROBLEM OCCUR DURING THE OPERATION OF SPREADER, always turn off engine and remove ignition key before investigating problem.** If power source has not been turned off, the spreader may start unexpectedly, causing severe injury or death.

SAFETY

TRANSPORTING SAFETY PRECAUTIONS

WHEN TRANSPORTING A LOADED SPREADER, USE REDUCED SPEED AND BE SURE THE VEHICLE HAS ADEQUATE BRAKES TO STOP.

- **DO NOT ALLOW ANYONE TO RIDE ON OR INSIDE THE SPREADER.**
- **REDUCE SPEED WHEN TRAVELING** loaded and/or over rough, soft, or wet terrain. Exercise caution on side slopes and when turning corners.
- **AVOID OPERATING THE SPREADER CROSSING GULLIES OR DITCHES.**
- **WHEN WORKING ON SLOPES** or inclines, travel uphill or downhill. Keep the transmission in gear when going downhill.
- **AVOID DRIVING ON** loose fill, rocks, inclines, ditches, and holes.
- **ALWAYS PARK** the spreader on level ground and block the tires.
- **IF UNIT IS FOR HIGHWAY TRANSIT** the end user is responsible for federal, state and local vehicle safety regulation compliance (example: under ride requirements, lighting and weight limitations).

SAFETY DECALS

SAFETY DECALS ARE PLACED ON THIS UNIT FOR THE PROTECTION OF THE OPERATOR OR ANY PERSON NEAR THE UNIT.

- **BE SURE EVERYONE WHO OPERATES THE SPREADER UNDERSTANDS ALL THE INFORMATION, WARNING, CAUTION AND DANGER DECALS.**
- **KEEP THE DECALS CLEAN** so they are readable. This applies to all caution, warning, and danger decals.
- It is the **OWNER'S RESPONSIBILITY** to provide information for safe operation of this machine.
- **REPLACE ANY DAMAGED OR WORN DECAL.** Once any part of a decal becomes non-readable, it should be replaced. Replacement decals may be ordered through your dealer or Art's-Way Manufacturing.
- **WHEN REPLACING DECALS,** be sure the surface area is clean and dry, peel the backing off the decal, and apply to the unit. Be sure to wipe with a clean cloth to rub out all air bubbles to assure a good seal. For best adhesion decals should be applied in temperatures of 50°(f) or warmer.

MANURE SPREADER SAFETY

THERE ARE INHERENT HAZARDS ASSOCIATED WITH THE OPERATION OF A MANURE SPREADER. FOR YOUR SAFETY:

- **ONLY PROPERLY INSTRUCTED PEOPLE SHOULD OPERATE THE SPREADER**. Do not allow children or inexperienced persons to operate spreader.
- **KEEP ALL GUARDS AND SHIELDS IN PLACE**. Moving parts can crush and dismember.
- **CLEAR THE AREA** before equipment start up.
- **KEEP HANDS, FEET, AND LOOSE CLOTHING AWAY FROM ANY MOVING PARTS.**
- **DO NOT GO NEAR THE SPREADER WHILE THE MACHINE IS OPERATING**.
- **MAKE SURE THE PTO IS SECURELY LOCKED** to both the tractor and spreader before operating this unit.
- **DO NOT OPERATE PTO AT SPEEDS HIGHER** than manufacturer's recommendations.
- **HIGHWAY TRAFFIC IS NOT TO EXCEED 10 MPH**. The tires supplied are for farm use only and are not designed for use above this speed.
- **USE ADEQUATE SAFETY CHAINS** when towing the spreader.
- **USE OF A SLOW MOVING VEHICLE SIGN IS REQUIRED** on all public roads. Obey all applicable highway safety laws and rules.
- **ALWAYS USE A TRACTOR LARGE ENOUGH TO PROVIDE SUFFICIENT BRAKING** assistance when towing a loaded spreader.
- **USE CAUTION WHEN TRAVELING** over uneven terrain and when approaching stops.
- **DO NOT LOAD THE SPREADER** unless it is hitched to the tractor.
- **DO NOT UNHITCH A LOADED SPREADER** from the tractor. Leaving it supported by only the jack.
- **PARK THE SPREADER ON LEVEL GROUND** and place blocks ahead of and behind the wheels before unhooking from tractor to avoid unexpected rolling when separated from vehicle.
- **DO NOT ALLOW RIDERS ON THE SPREADER.**
- **DO NOT LIFT THE MANURE SPREADER BY THE BOX WELDMENT "D-RINGS".**
- **DO NOT WORK UNDERNEATH SLOP GATE.**

FAILURE TO HEED MAY RESULT IN SERIOUS PERSONAL INJURY OR DEATH
THERE ARE ADDITIONAL HAZARDS ASSOCIATED WITH THE SERVICE AND MAINTENENCE OF YOUR SPREADER.

FOR YOUR SAFETY:

- **INSPECT** when first delivered and regularly thereafter; that all connections and bolts are tight and secure before operating.
- **RETIGHTEN ALL WHEEL BOLTS** after the first hour of towing. Check periodically thereafter.
- **MAINTAIN PROPER TIRE AIR PRESSURE** at all times.
- **ALWAYS WEAR EYE PROTECTION** when operating or servicing spreader.
- **BE SURE ALL MOVEMENT HAS STOPPED** and that the PTO is disconnected and the tractor is shut off before servicing the spreader or components.
- **ESCAPING HYDRAULIC FLUID UNDER PRESSURE** can penetrate skin and cause serious injury. Relieve all pressure from the hydraulic system before connecting or disconnecting the lines or making repairs. Check all hoses and fittings before start-up and periodically during operation.
- **NEVER MAKE ANY ALTERATIONS** or modifications to this equipment.

FAILURE TO HEED MAY RESULT IN SERIOUS PERSONAL INJURY OR DEATH

PRE-OPERATION

IMPORTANT: READ BEFORE OPERATING SPREADER.
IT IS THE RESPONSIBILITY OF THE OWNER TO MAKE SURE THE SPREADER IS SET UP PROPERLY. THE FOLLOWING RECOMMENDATIONS SHOULD BE HELPFUL.

- **CHECK FOR PROPER ASSEMBLY**, adjustment and lubrication. Check to be sure all bolts and setscrews are tight. Check to be sure that all belts and belt tighteners are properly adjusted. Review Operating Safety Precautions and Lubrication instructions for more information.
- **BE SURE ALL SHIELDS** are properly in place, including any drive-line shields
- **CHECK FOR AND REMOVE ANY FOREIGN OBJECTS** in the spreader box and discharge area.
- **BE SURE NO ONE IS NEAR THE SPREADER**.
- **TEST RUN THE SPREADER**.
- **WITH THE SPREADER EMPTY**, start the apron and beaters.
- **RUN FOR AT LEAST 5 MINUTES**.
- **CHECK THE SPREADER DRIVE COMPONENTS TO BE SURE THEY ARE NOT ABNORMALLY HOT.**

If any of these items are not running as indicated, immediately repair or contact your service representative. Always refer to Operating Safety Precautions before operating or servicing the spreader.

LUBRICATION

ALWAYS STOP THE MANURE SPREADER AND DISCONNECT POWER BEFORE SERVICING, REPAIRING, OR CLEANING. USE SAFE SHOP PROCEDURE AND EXERCISE CAUTION WHEN WORKING ON THIS MACHINE!

It is extremely important to properly lubricate your new ART'S-WAY machine before it is used for the first time. If the mechanical drive components of your unit are not protected from shock and frictional abrasion, the wear rate of these components will be vastly accelerated and their life span will be drastically reduced. For proper care and maintenance, your machine should be serviced with engine oil, multipurpose grease, and fluids specified below.

It is extremely important that the lubrication guide be followed. For lubricating bearings, use good quality multipurpose grease. Pump the grease in slowly. Roller chains should be lubricated with engine oil, or a spray- on chain lubricant and then the spreader operated under a no-load condition. This will allow the roller chains to be thoroughly lubricated and thus minimize heat-up during operation.

DESCRIPTION	INTERVAL	LUBRICANT
APRON BEARINGS	15-20 HOURS	GREASE
APRON GEAR CASE	ANNUALLY	EP90 GEAR LUBE
APRON CHAIN	WHEN PARKED	30WT OIL
BEATER GEAR CASE	ANNUALLY	EP90 GEAR LUBE
UNIVERSAL JOINTS	15-20 HOURS	GREASE
AXLE HUBS	BI-ANNUALLY	GREASE
PTO SHAFTS	15-20	GREASE
SLIP CLUTCH	BI-ANNUALLY	GREASE
CAST FLANGE BEARINGS	15-20 HOURS	GREASE
PILLOW BLOCK BEARINGS	15-20 HOURS	GREASE
SLOP GATE PIVOT POINT	15-20 HOURS	GREASE

ALWAYS REPLACE ALL SHIELDS AFTER MAINTENANCE AND LUBRICATION IS COMPLETE

INSPECTION & ADJUSTMENTS

ALWAYS STOP SPREADER, SHUT OFF VEHICLE ENGINE AND REMOVE IGNITION KEY BEFOR SERVICING, REPAIRING, OR CLEANING, USE SAFE SHOP PROCEDURES AND EXERCISE CAUTION WHEN WORKING ON THIS SPREADER!

- **SHIELDING** to be sure all shielding is in place and functioning properly. Replace all damaged or missing shielding immediately-Contact your nearest dealer or the Art's-Way parts/service dept. for more information. Check bolts and Set Screws after a few hours of use and each month thereafter, and tighten if necessary.
- **AFTER A FEW HOURS OF INITIAL OPERATION,** check all bolts and set screws to be sure they are tight and secure.
- **CHECK BEATER TEETH.** Bolts must stay tight to prevent teeth from being flung from beaters. Look for wear on teeth and replace any that are worn out or damaged.
- **SAFETY DECALS FOR READABILITY**. If any safety decals are removed, obstructed, or otherwise not understandable, they should be replaced immediately. Keep all decals clean!
- **IMPORTANT: IF YOU WELD ON THIS UNIT:** Do Not allow the currents to flow through the bearings, Ground directly to the item being welded.
- **PERIODICALLY CHECK** all set screws and bolts and retighten if necessary.
- **APRON CHAINS** for wear, proper alignment and tension, according to the adjustment guidelines as shown.
- **BE SURE TO KEEP PROPER TENSION ON APRON CHAINS.** The (4) apron tightener bolts are located at the front of the unit at each end of the apron shaft. They should be adjusted evenly for their respective assembly as shown on next page:

Apron reverse should only be enabled/used in the event of a clog or orther such event.

Keep reverse function turned off (valve closed) while in normal operation.

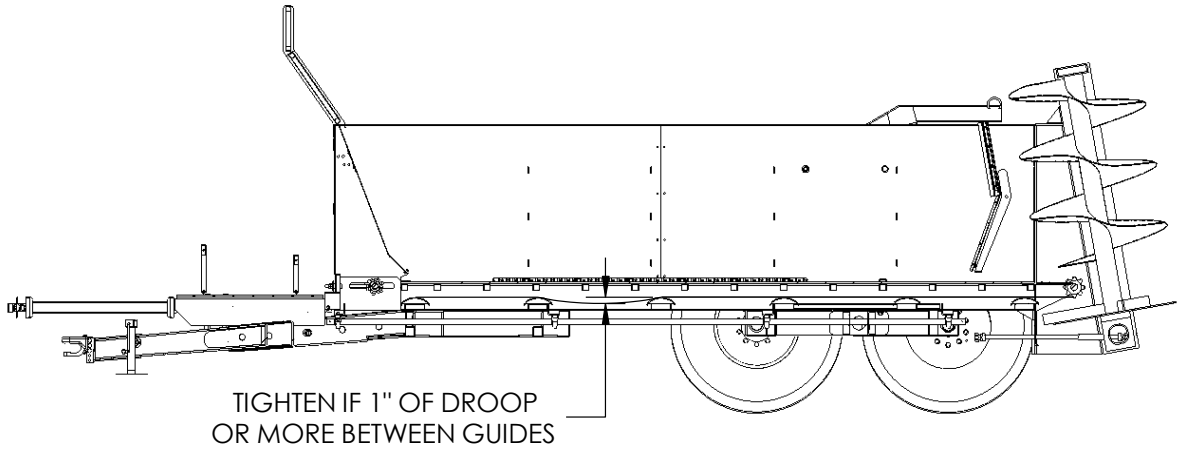

If apron is loose, remove one link from each side of that apron chain assembly and readjust to tension as shown. **CAUTION:** Over tightening can cause premature failure of the drive components.
Check tension before operating. Re-tension if nessasary.

SPREADER OPERATION

ALWAYS REFER TO THE OPERATING SAFETY PRECAUTIONS AND SAFETY DECAL SECTIONS OF THIS MANUAL BEFORE OPERATING THIS SPREADER

LOADING

- **BEFORE LOADING THE SPREADER**, be sure there are no obstructions in the beaters or discharge opening. Inspect the spreader to see that it is in good mechanical condition and that all shields are in place and functional.
- **NEVER CHECK THE SPREADER WHILE IT IS OPERATING**
- **IN FREEZING WEATHER,** make sure the apron is not frozen with manure. If this appears likely, turn off vehicle engine, remove ignition keys, loosen the frozen area and operate before loading.
- **AVOID LOADING ROCKS AND OTHER SOLID OBJECTS INTO THE SPREADER**
- **NEVER COVER BEATERS** when loading, beaters should spin freely before engaging.

OPERATION

- **BEFORE OPERATING, BE SURE NO ONE IS NEAR THE SPREADER AND THAT THE DISCHARGE AREA IS CLEAR OF ALL OBJECTS OR PERSONS THAT COULD BE HARMED IF MATERIAL WAS DISCHARGED!**
- **WITH THE VEHICLE STOPPED** and the engine throttled down, engage the apron and beater levers.
- **START VEHICLE IN MOTION.**
- **WHEN THE SPREADER IS EMPTY DURING FREEZING TEMPERATURES**, be sure that the spreader is cleaned out to prevent the apron from freezing down.
- **IF THE BEATER QUITS TURNING**, stop the vehicle, turn off the motor, remove the ignition key, and check driveline of the spreader, starting in the front with the PTO and working towards the rear of the spreader.
- **NEVER LOAD THE SPREADER SO THE LOAD IS ON THE BEATERS.**

*If a problem should occur while unloading the spreader, or if you want to clean off the spreader after it is empty, NEVER leave the VEHICLE without first turning off the engine and removing ignition key.

DEALER SETUP REMINDERS

If the spreader is delievered with running gear disassembled (on a flatbed) know that for V180/X900 units the tandem rocker arm weldments are asymetrical to decrease soil compaction with these larger spreaders. Therefore when re-assembling know that there is a left and a right weldment that should be put back on the machine with the longer part of the arm weldment (from tip to center pivot) pointing towards the front of the machine.

If the spreader is delievered with running gear assembled (towed) and has the floatation tire option installed please take note of the tread direction. Floatation tires may be installed with "forward pointing" tread direction to decrease floatation properties when in transit to distant destinations. Tires should be installed with "backward pointing" tread direction before unit is delieved to end-user to increase floatation performance in field.

THIS PAGE
LEFT
INTENTIONALLY
BLANK

ILLUSTRATED PARTS LIST: MANURE SPREADER

TONGUE TO BOX ASSEMBLY

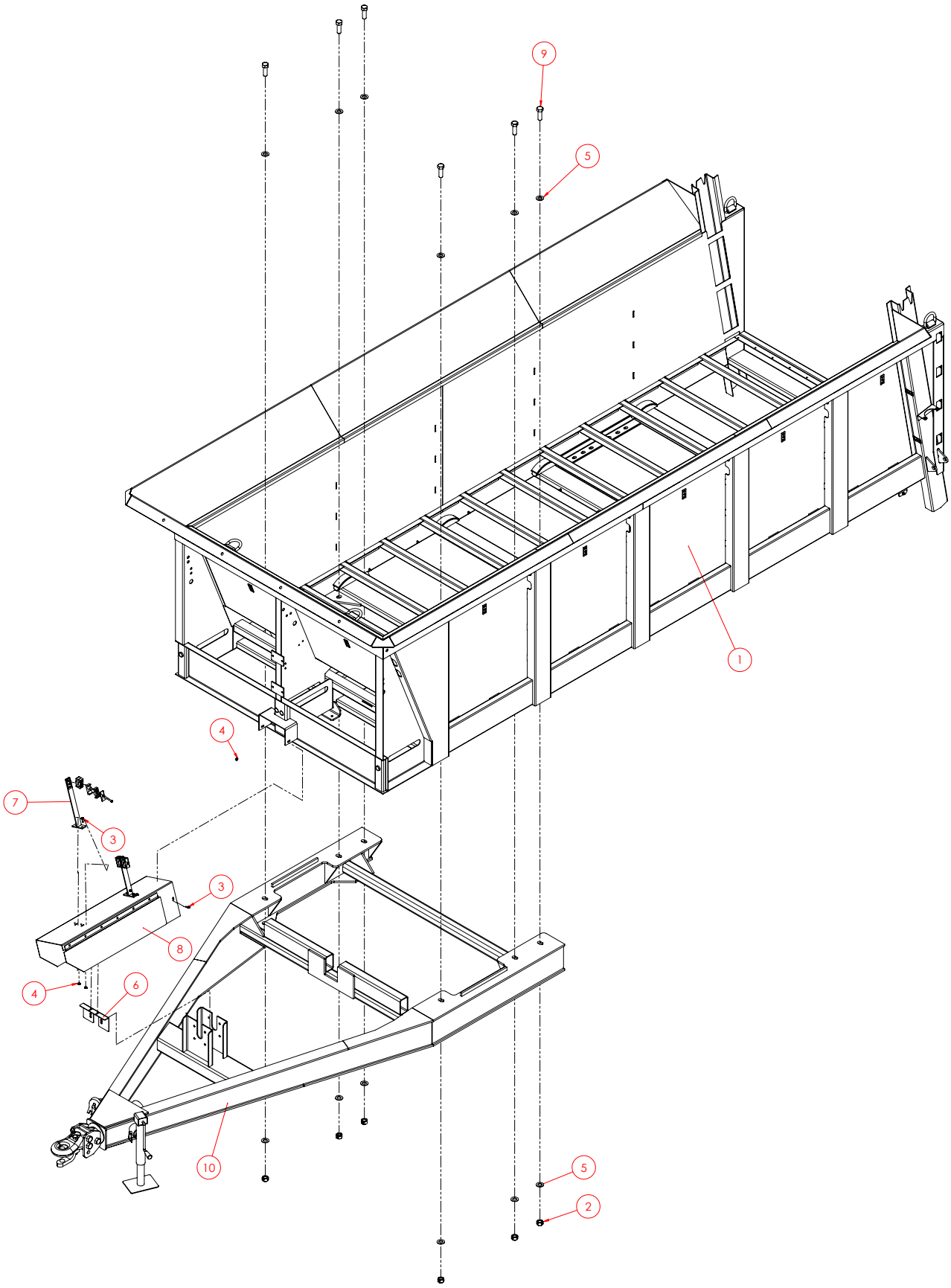

ITEM NO.	PART NUMBER	DESCRIPTION	QTY.
1	690770	MAIN BOX WELDMENT,	1
2	990510	NUT, LOCK 2-WAY 1-8	10
3	600060	BOLT, HFH 5/16-18 X 1.00"	6
4	600110	NUT, HFH 5/16-18 NYLOC	6
5	1107389	WASHER, FLAT 1 SAE	12
6	H160025-04	SUPPORT, PTO SHIELD	1
7	H160022	LONG HOSE HOLDER	1
8	H140025	PTO SHIELD ASSY	1
9	497590	BOLT, HHCS 1-8 X 3 GR8	6
10	690795	TOUNGE WELDMENT	1

TONGUE ASSEMBLY

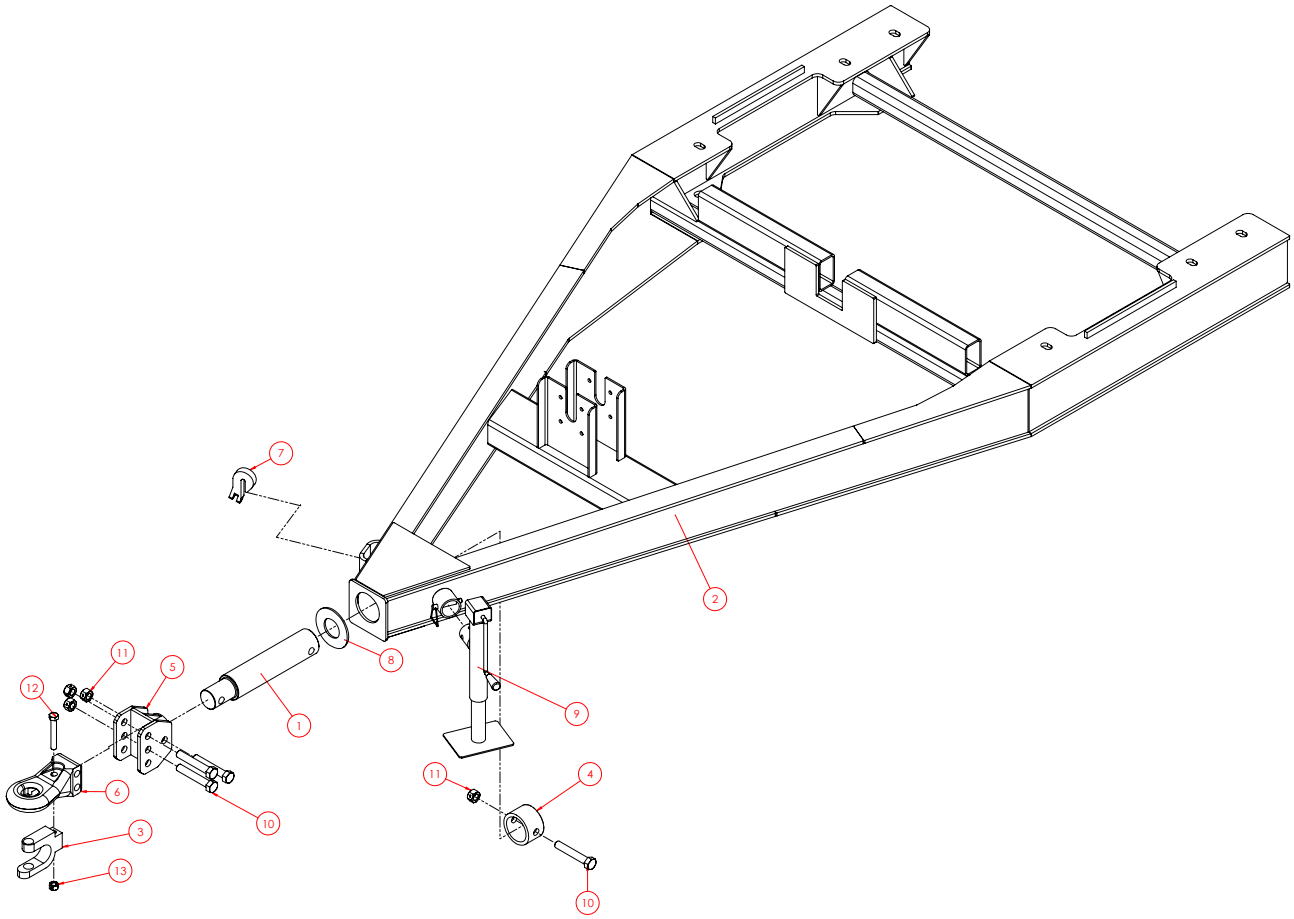

ITEM NO.	PART NUMBER	DESCRIPTION	QTY.
1	H160075	SWIVEL SHAFT	1
	597420	WEIGH-SHAFT	
2	690795	TOUNGE WELDMENT	1
3	HH76-02-8199	CLEVIS FOR HITCH	1
4	H160077	SWIVEL HITCH STOP	1
5	H160071	HITCH RECEIVER	1
6	HH76-02-8238	HITCH, CAT4 AUSTEMPERED HITCH	1
7	472910	CHAIN, SAFETY 5/8"	1
8	H160076	SWIVEL HITCH WASHER	1
9	HJ76-02-0103	JACK, BULLDOG	1
	630900	JACK, SIMOL	
10	600490	BOLT, HHCS 1-8 X 6"	4
11	990510	NUT, LOCK 2-WAY 1-8	4
12	P99440	BOLT, HHCS 3/4-10 X 5-1/2", GR8	1
13	152360	NUT, LOCK 3/4-10 HEX	1

RUNNING GEAR TO BOX ASSEMBLY

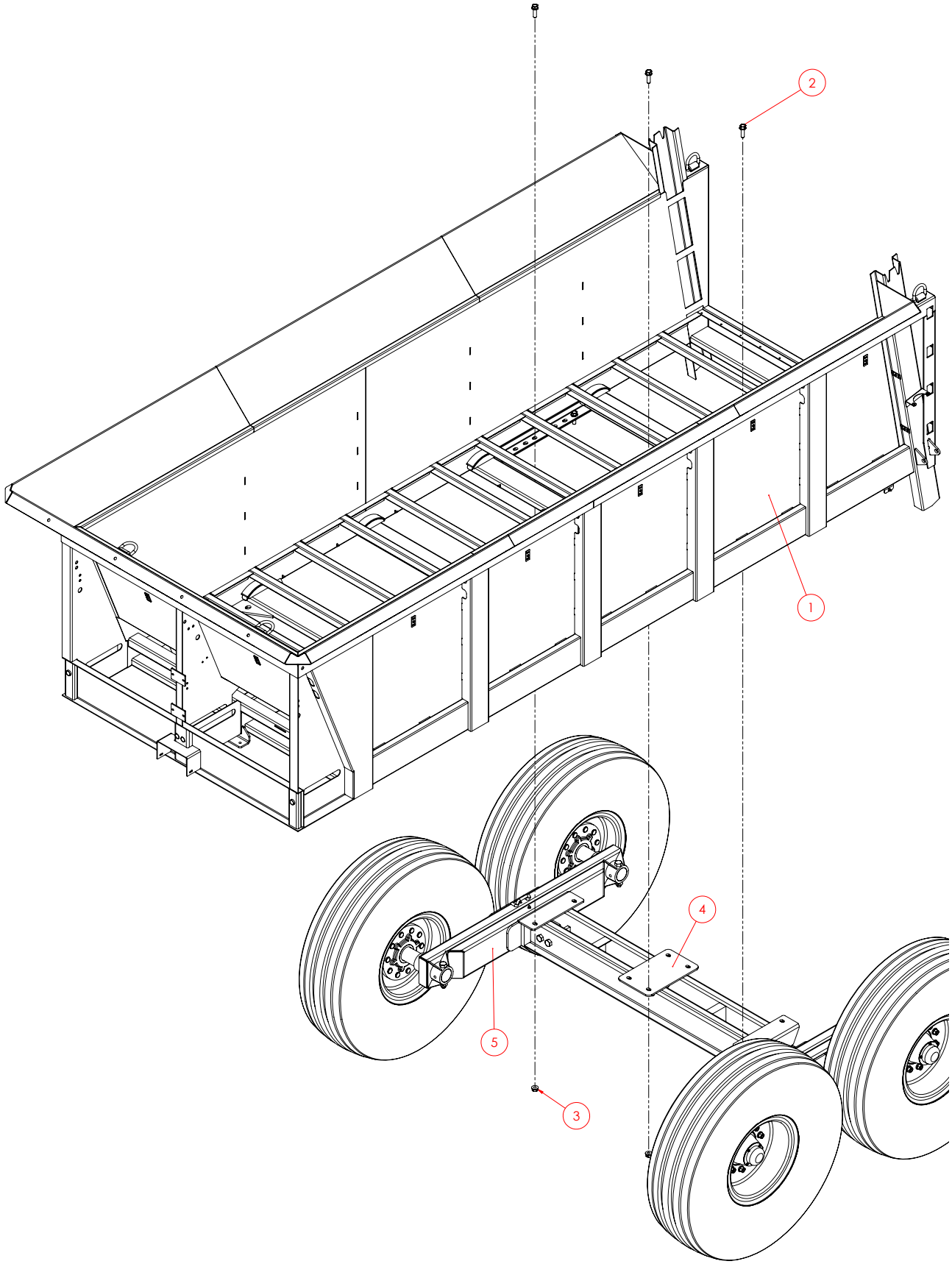

ITEM NO.	PART NUMBER	DESCRIPTION	QTY.
1	690770	MAIN BOX WELDMENT,	1
2	600430	BOLT, HFH 3/4-10 X 2-1/2"	8
3	600160	NUT, HFH TOPLOCK 3/4-10	8
4	616010	V-140 TANDEM	1
5	690780	TANDEM ROCKER WELDMENT,	2

RUNNING GEAR ASSEMBLY

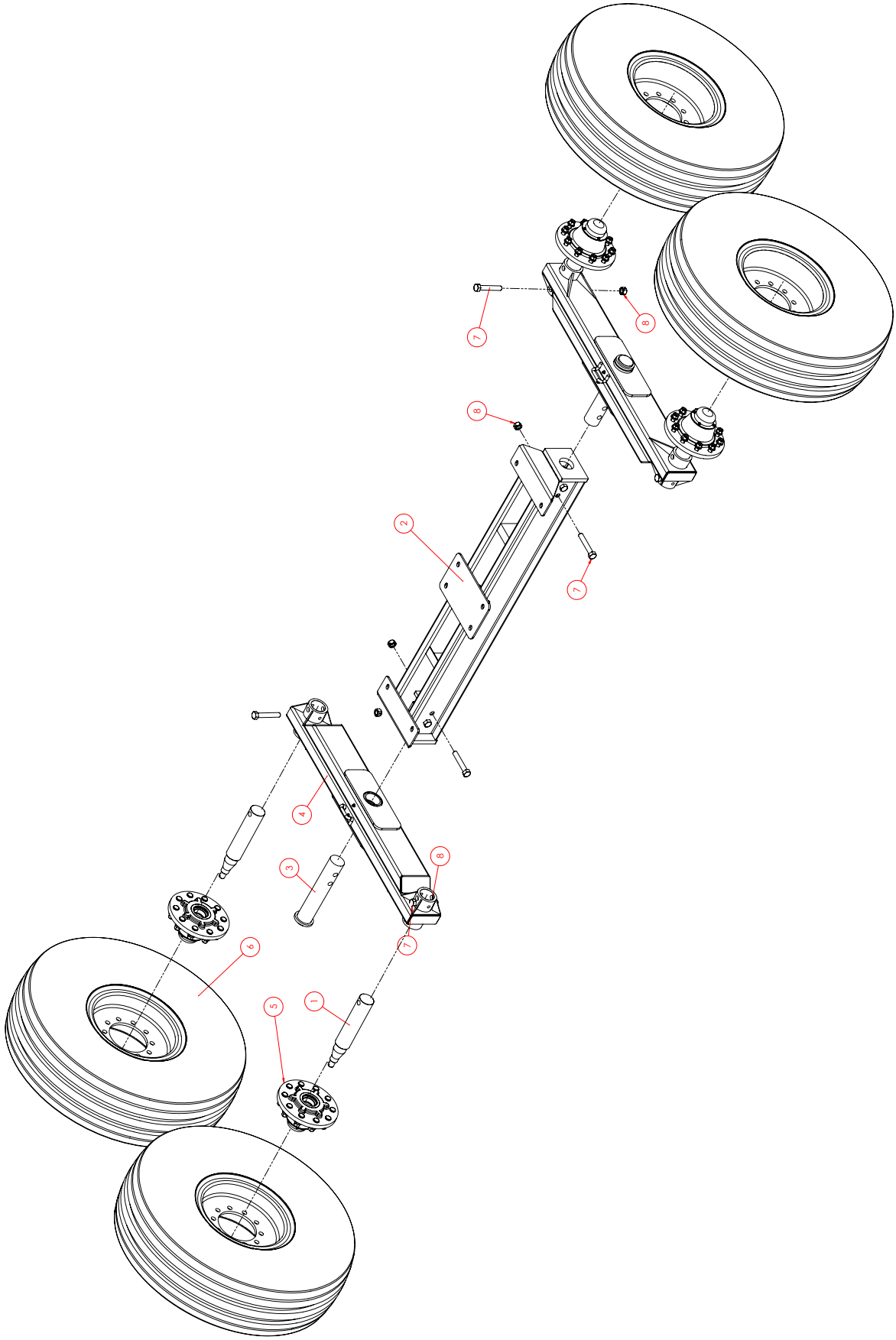

ITEM NO.	PART NUMBER	DESCRIPTION	QTY.
1	HN69-06-4075	SPINDLE, 3-3/8 DIA.	4
	597410	WEIGH-SPINDLE, 3-3/8 DIA.	
2	616010	V-140 TANDEM	1
3	690785	TANDEM ROCKER PIN WLDT,	2
4	690780	TANDEM ROCKER WELDMENT,	2
5	HN69-05-4031	873 HUB ASSEMBLY	4
6	HN69-07-4019	LH WHEEL, 16R20 (USED MILITARY)	2
	690617	LH WHEEL, 600/50R22.5 (16” WIDE FLOATATION)	
	690624	LH WHEEL, 600/50R22.5 (20” WIDE FLOATATION)	
6	HN69-07-4019	RH WHEEL, 16R20 (USED MILITARY)	2
	690615	RH WHEEL, 600/50R22.5 (16” WIDE FLOATATION)	
	690623	RH WHEEL, 600/50R22.5 (20” WIDE FLOATATION)	
7	600490	BOLT, HHCS 1-8 X 6"	8
8	990510	NUT, LOCK 2-WAY 1-8	8

HUB ASSEMBLY

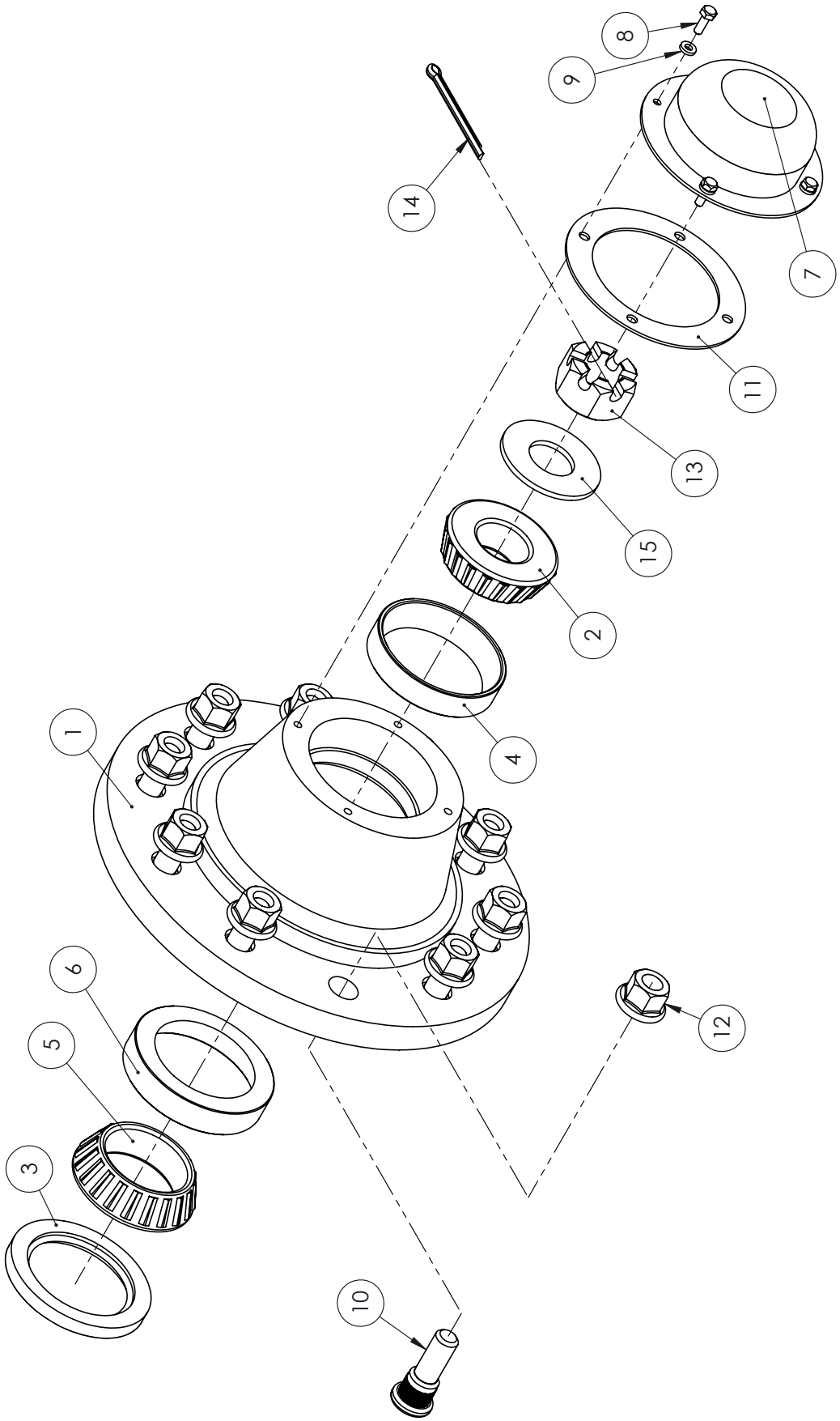

ITEM NO.	PART NUMBER	DESCRIPTION	QTY.
1	HN69-05-4072	873 HUB CASTING W/ STUDS & RACES (OLD)	1
	HN69-05-4073	873 HUB CASTING W/ STUDS & RACES (NEW)	
2	HN69-02-4045	OUTSIDE BEARING #460	1
3	HN69-02-4028	GREASE SEAL #33464 SA	1
4	HN69-02-4068	OUTSIDE BEARING RACE #453A	1
5	HN69-02-4064	INSIDE BEARING #33275	1
6	HN69-02-4066	INSIDE BEARING RACE #33462	1
7	HN69-02-4030	4-BOLT DUST CAP (OLD)	1
	HN69-02-4031	4-BOLT DUST CAP (NEW)	
8	HZ82-03-0412	1/4" HEX HEAD BOLT, .75" (OLD)	4
	136470	5/16" HEX HEAD BOLT, .75" (NEW)	
9	HZ82-66-0404	WASHER, LOCK SPLIT, 1/4" Z5 (OPTIONAL)	4
10	HN69-02-4061	WHEEL, STUD 3/4"	10
11	455750P	GASKET, HUB (OLD)	1
	455751P	GASKET, HUB (NEW)	
12	455740P	NUT, HEX FLANGE, 3/4-10 HUB	10
13	E552023	NUT, SLOTTED 1-1/4 12 GR5	1
14	MP906827	.25"X 3" COTTER PIN	1
15	R61502	FW 1.375	1
OLD STYLE HUB SHOWN. NEW STYLE HAS GREASE ZERK.			

WHEEL ASSEMBLY (USED MILITARY)

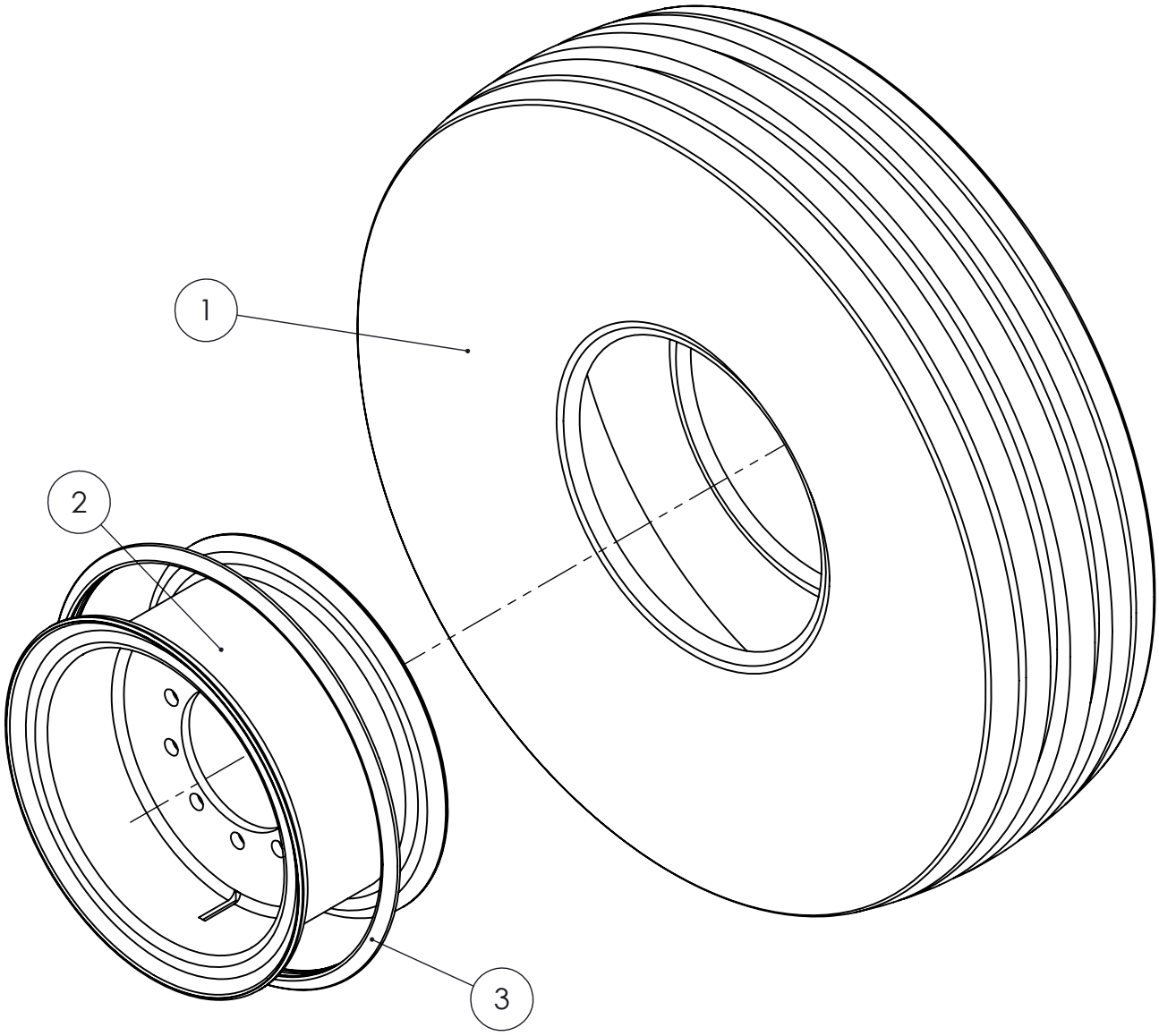

ITEM NO.	PART NUMBER	DESCRIPTION	QTY.
1	HN69-07-4073	TIRE, 425/65RX22.5	1
2	HN69-07-4074	RIM, 16R20	1
3	606100	L RING, WHEEL LOCKING	1
4	606105	TUBE, INNER W/ STEM	1

WHEEL ASSEMBLY (FLOATATION)

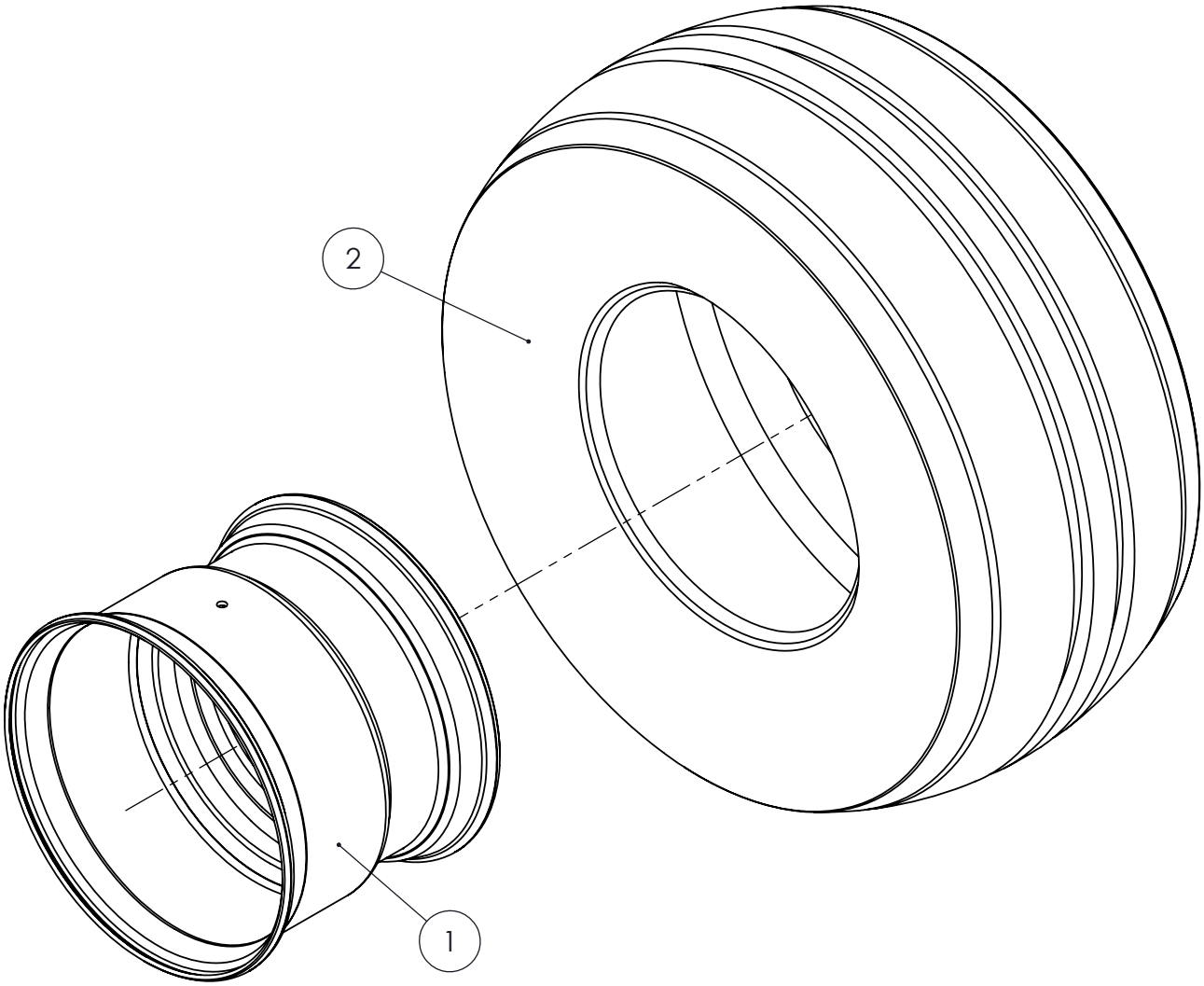

ITEM NO.	PART NUMBER	DESCRIPTION	QTY.
1	690616	RIM, 4.5" OFFSET (16” WIDE)	1
	690618	RIM, 4.5” OFFSET (20” WIDE)	
2	MP12.11073	TIRE, 600/50R22.5	1
3	269490	STEEL VALVE STEM	1

DRIVELINE ASSEMBLY

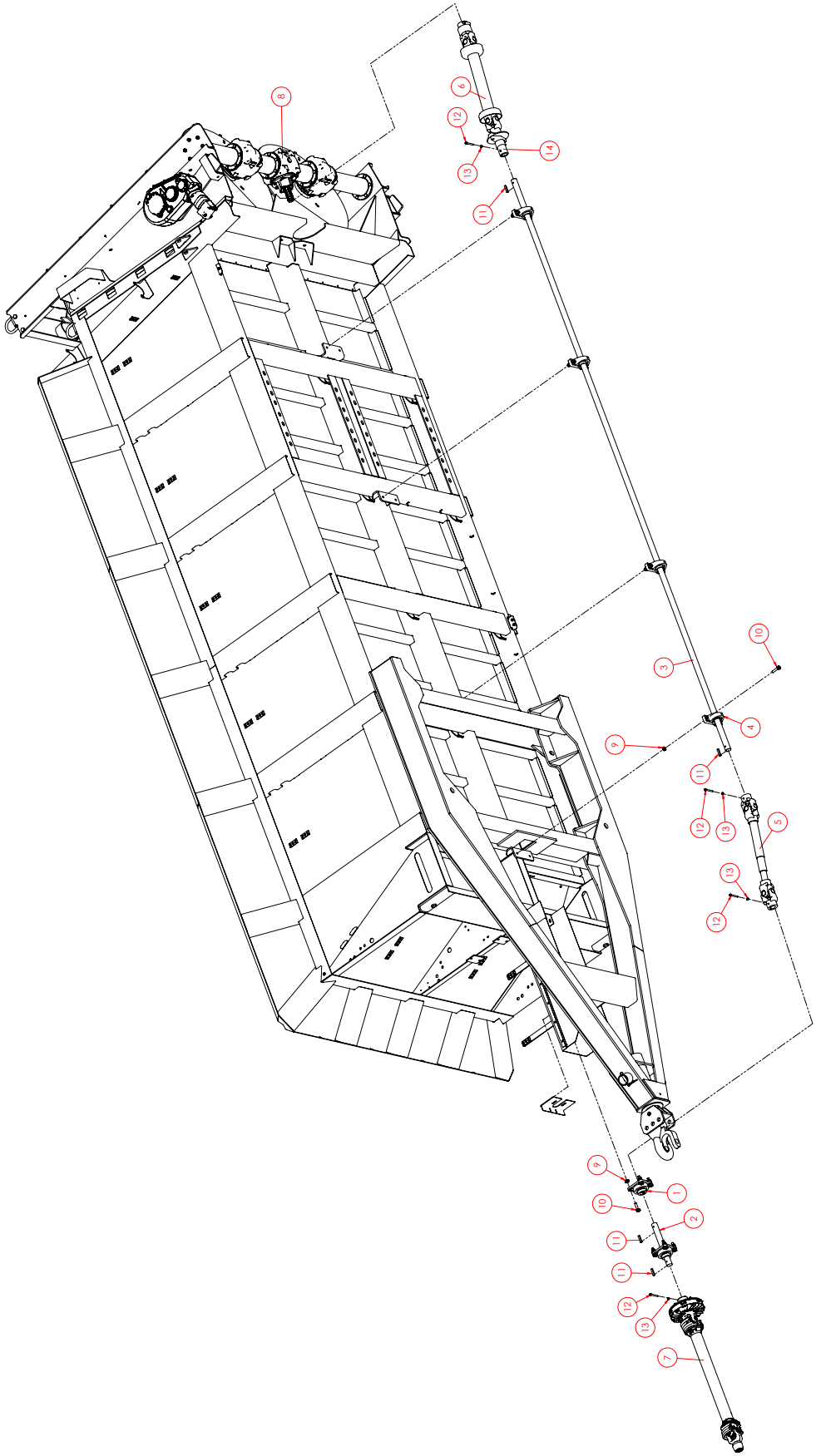

ITEM NO.	PART NUMBER	DESCRIPTION	QTY.
1	010560	BEARING ASSEMBLY	2
2	H160028	PTO DRIVE SHAFT	1
3	H140012	DRIVE SHAFT	1
4	HK08-55-1027	BEARING, 1.50", PILLOW BLOCK	4
5	H160073	SLIP SLEEVE SHAFT ASSY (TO TONGUE)	1
6	H140049	35R DRIVE SHAFT WITH GUARD (TO BEATERS)	1
7	H160045	1000 RPM PTO DRIVE	1
	H160049		
	H160105		
	H160106		
8	H140503	V140 BTRS W/HOOKS	1
9	600140	NUT, HFH NYLOC 1/2-13	16
10	600240	BOLT, HFH 1/2-13 X 2.00"	16
11	021530	KEY, SQUARE 3/8 X 2	4
12	160230	BOLT, HHCS 5/16-18 X 3 GR5 ZN	4
13	025670	NUT, LOCK 5/16-18	4
14	607060	PUMP ADAPTER,	1

35R DRIVE SHAFT WITH GUARD (TO BEATERS)

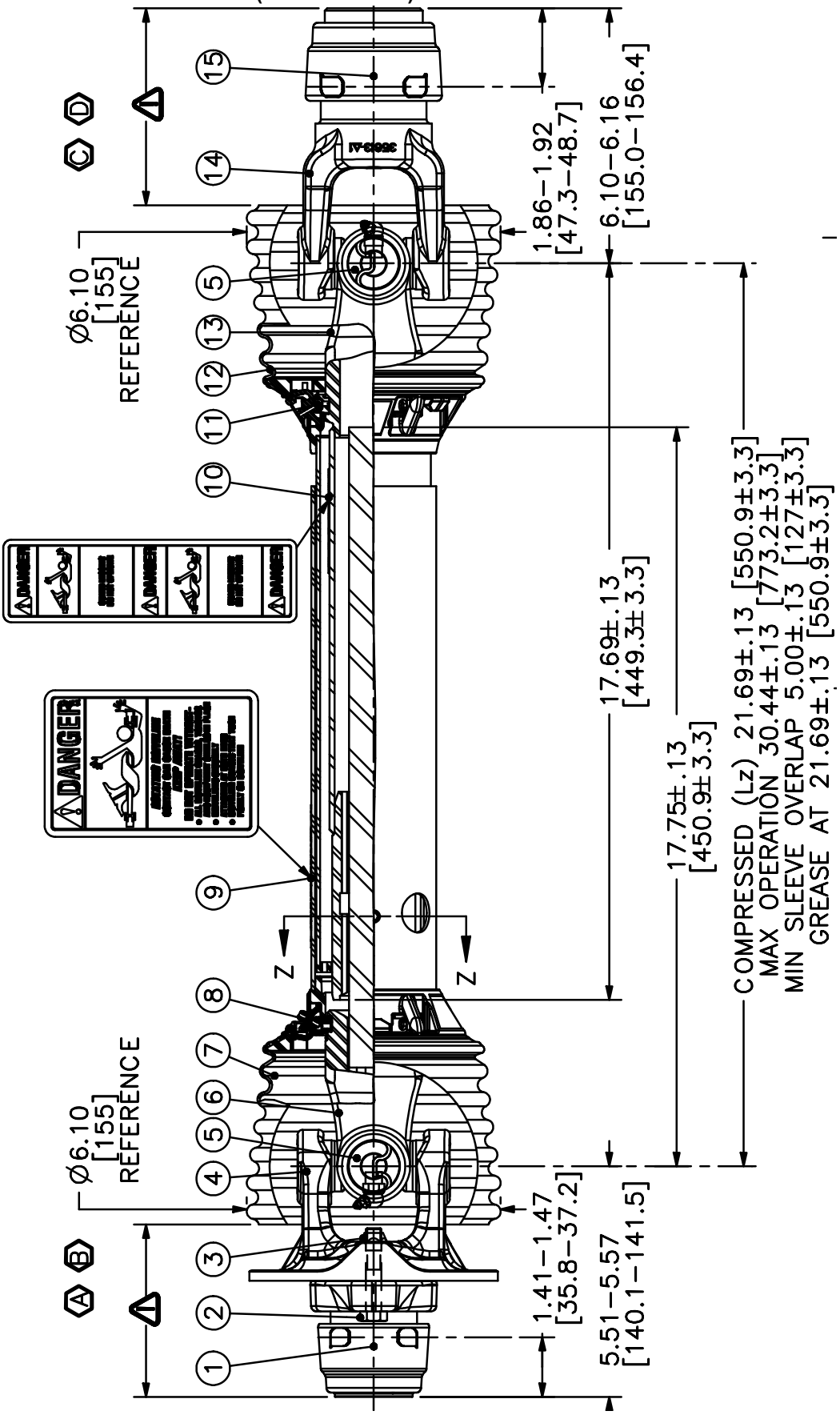

ITEM NO.	PART NUMBER	DESCRIPTION	QTY.
A	H93-25686	JOINT A SHAFT HAU- ASM. •/GUAM	1
B	H95-25686	JOINT A SHAFT MTF ASM.	1
C	H92-25686	JOINT * TUBE HALF ASM. W/GUARD	1
D	H94-25686	JOINT * TUBE HHF ASK.	1
1	H26-15120	SSL/AUTO-LOK REPAIR KIT	1
2	H11-14680	BOLT, 3/8-16 X 2.00 LG., GR. 8	1
3	H11-10035	LOCKNUT, 3/8-16	1
4	H40-10139	BALL SHEW ASM.	1
5	H03-10045	35R CROSS KIT	2
6	H99-25686	YOKE A SHAFT (1.19 SO.)	1
7	H97-25686	OUTER GUARD	1
8	H19-11146	GUARD REPAIR KIT	1
9	H13-10021	SAFETV SIGN	1
10	H13-10022	SAFCTY SGN	1
11	H19-11147	GUARD REPAIR KIT	1
12	H96-25686	INNER GUARD	1
13	H98-25686	YOKE. TUBE * SUP SLEEVE	1
14	H35610-1005	SAFETY SUDE LOCK ASM.	1
15	H26-13387	SSL/AUTO-LOK REPAIR KIT	1

SLIP SLEEVE SHAFT ASSY (TO TONGUE)

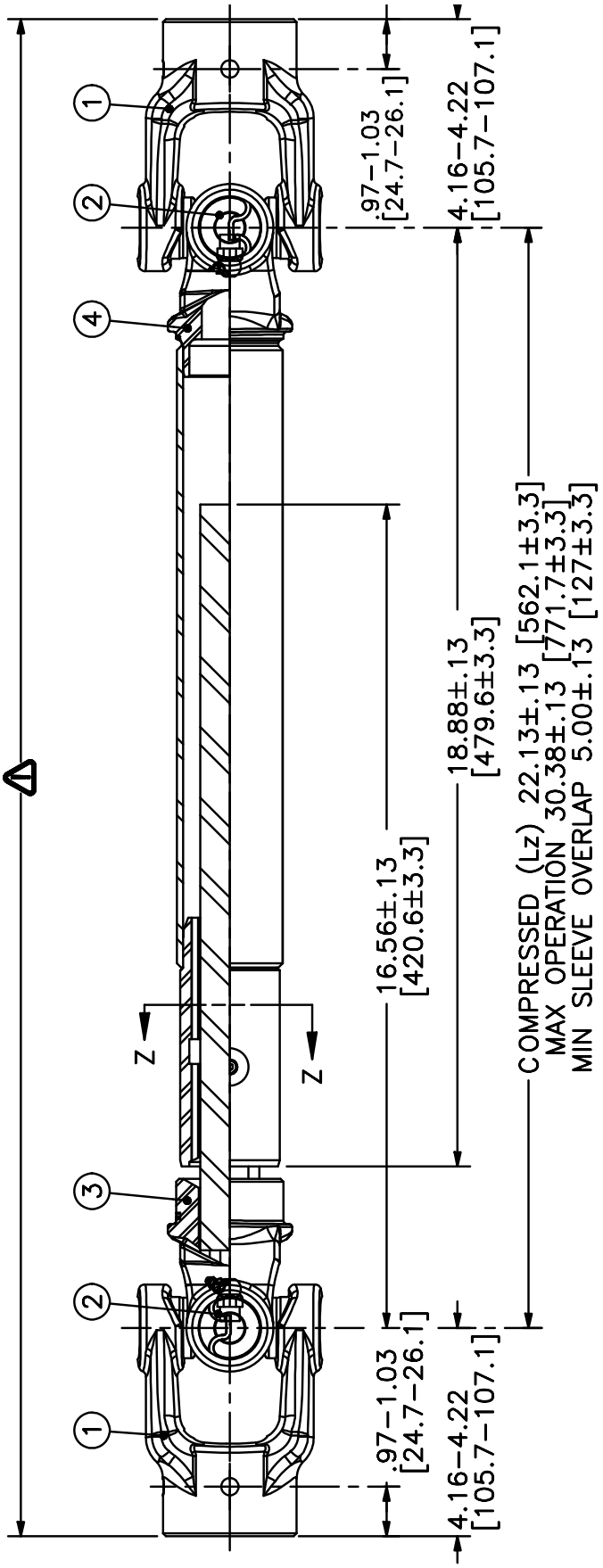

ITEM NO.	PART NUMBER	DESCRIPTION	QTY.
A	H95-25413	JOINT & SHAFT HALF ASM.	1
B	H94-25413	JOINT & TUBE HALF ASM.	1
1	H35040-1003	YOKE	2
2	H03-10045	35R CROSS KIT	2
3	H99-25413	YOKE & SHAFT (1.19 SQUARE)	1
4	H98-25413	YOKE, TUBE, & SLIP SLEEVE	1

1000 RPM 1-3/8 X 21 SPLINE PTO W/OVERRUN CLUTCH

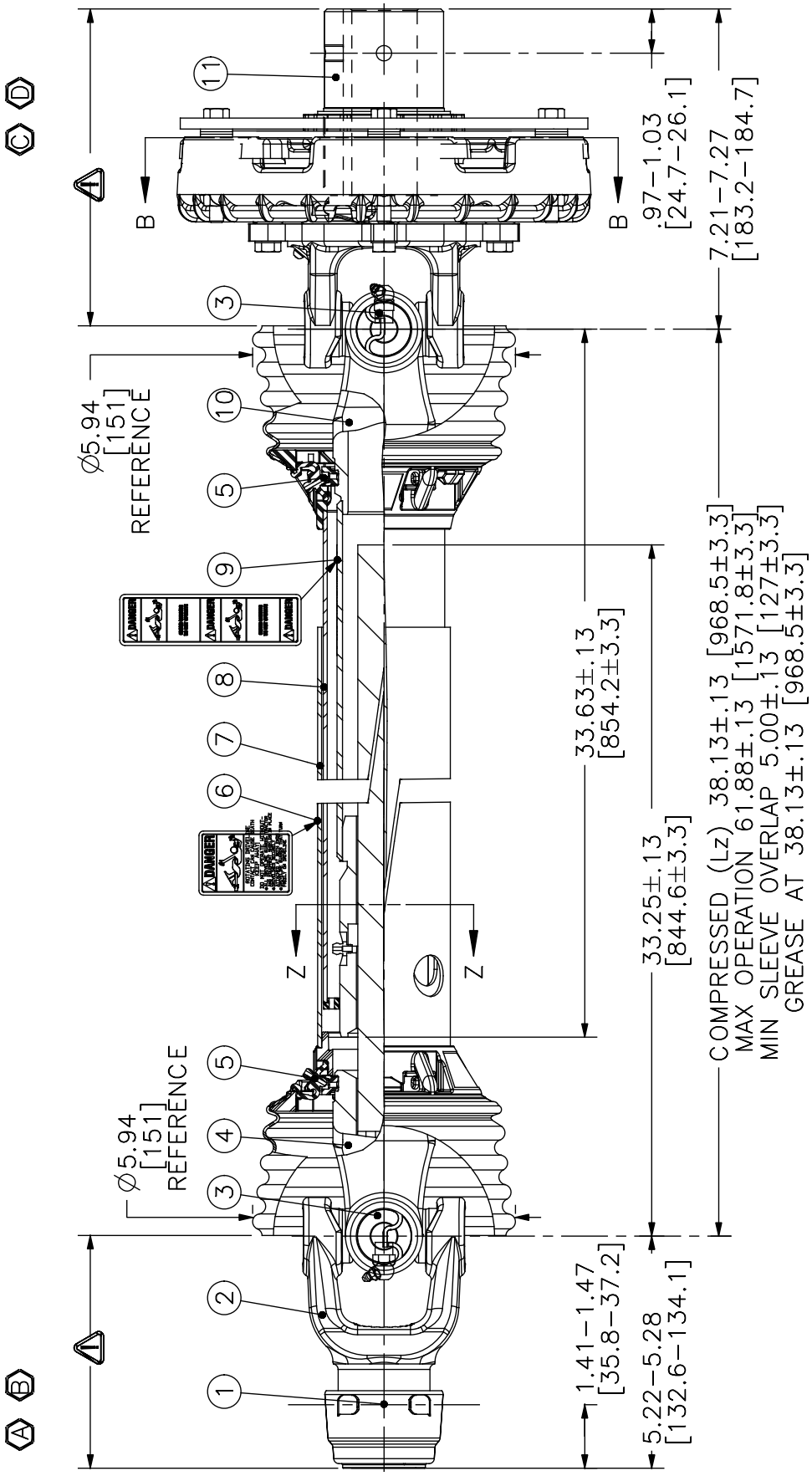

ITEM NO.	PART NUMBER	DESCRIPTION	QTY.
A	H93-25396	JOINT & SHAFT HALF ASM. W/GUARD	1
B	H95-25396	JOINT & SHAFT HALF ASM.	1
C	H92-25396	JOINT & TUBE HALF ASM. W/GUARD	1
D	H94-25396	JOINT & TUBE HALF ASM.	1
1	H26-15120	SSL/AUTO-LOK REPAIR KIT	1
2	H35031-1052	SAFETY SLIDE LOCK YOKE ASM.	1
3	H03-10045	35R CROSS KFT	2
4	H99-25396	YOKE & SHAFT (1.19 SO.)	1
5	H19-11143	GUARD REPAIR KIT	2
6	H13-10021	SAFETY SIGN	1
7	H97-25396	OUTER GUARD	1
8	H96-25396	INNER GUARD	1
9	H13-10022	SAFETY SIGN	1
10	H98-25396	YOKE, TUBE ST SLIP SLEEVE	1
11	H38-15088	FRICTION CLUTCH ASM.	1

1000 RPM 1-3/4 X 20 SPLINE PTO W/OVERRUN CLUTCH

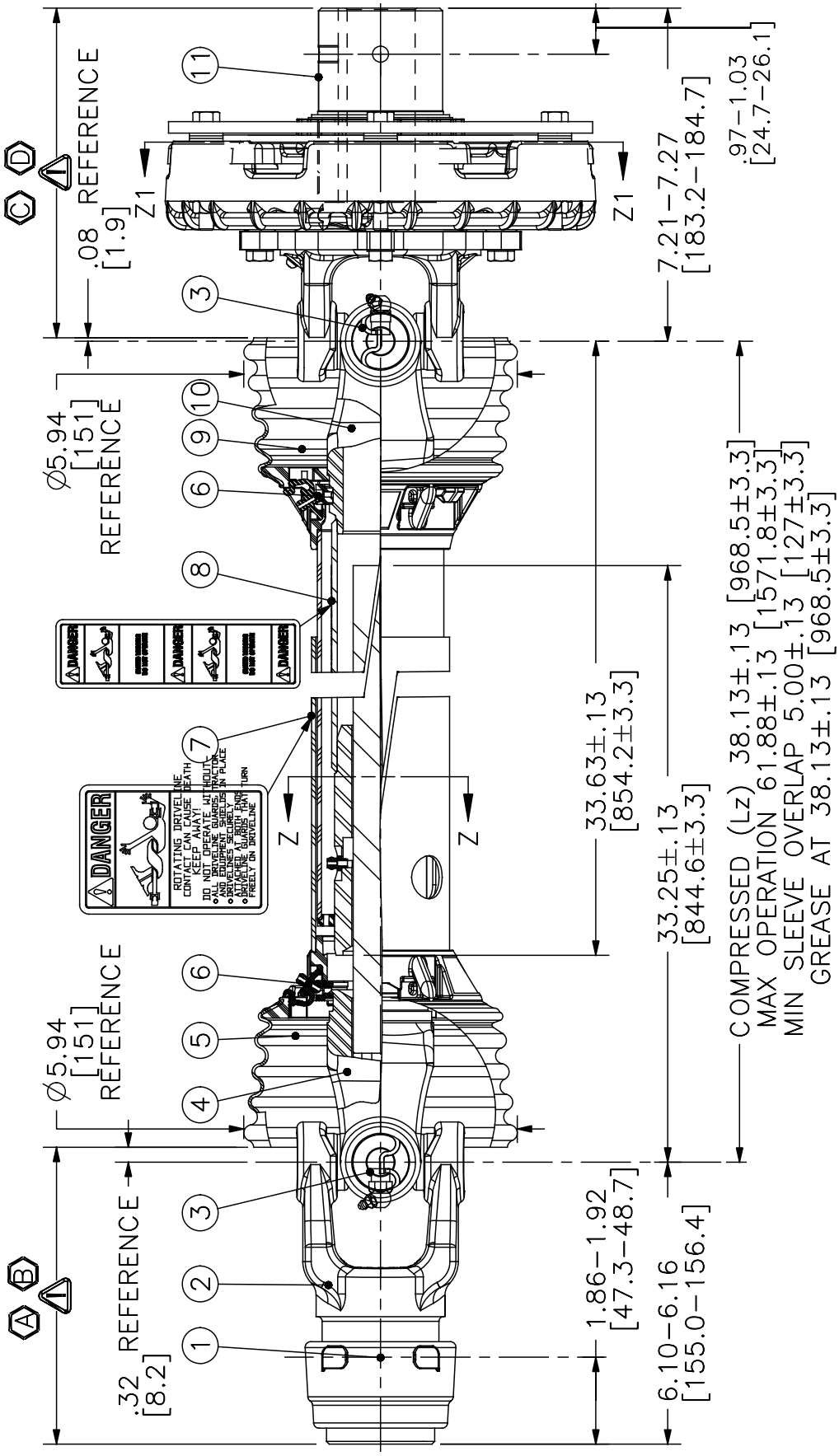

ITEM NO.	PART NUMBER	DESCRIPTION	QTY.
A	H93-25414	JOINT & SHAFT HALF ASM. W/GUARC	1
B	H95-25414	JOINT & SHAFT HALF ASM.	1
C	H92-25396	JOINT & TUBE HALF ASM. W/GUARD	1
D	H94-25396	JOINT & TUBE HALF ASM.	1
1	H26-13387	SSL/AUTO-LOK REPAIR KIT	1
2	H35041-1850	SAFETY SLIDE LOCK YOKE ASM.	1
3	H03-10045	35R CROSS KIT	2
4	H99-25396	YOKE & SHAFT (1.19 SQ.)	1
5	H97-25396	OUTER GUARD	1
6	H19-11143	GUARD REPAIR KIT	2
7	H13-10021	SAFETT SIGN	1
8	H13-10022	SAFEPC SIGN	1
9	H96-25396	INNER GUARD	1
10	H98-25396	YOKE. TUBE & SLIP SLEEVE	1
11	H38-15088	FRICTION CLUTCH ASM.	1

1000 RPM 1-3/8 X 21 SPLINE C-V PTO W/CLUTCH PACK

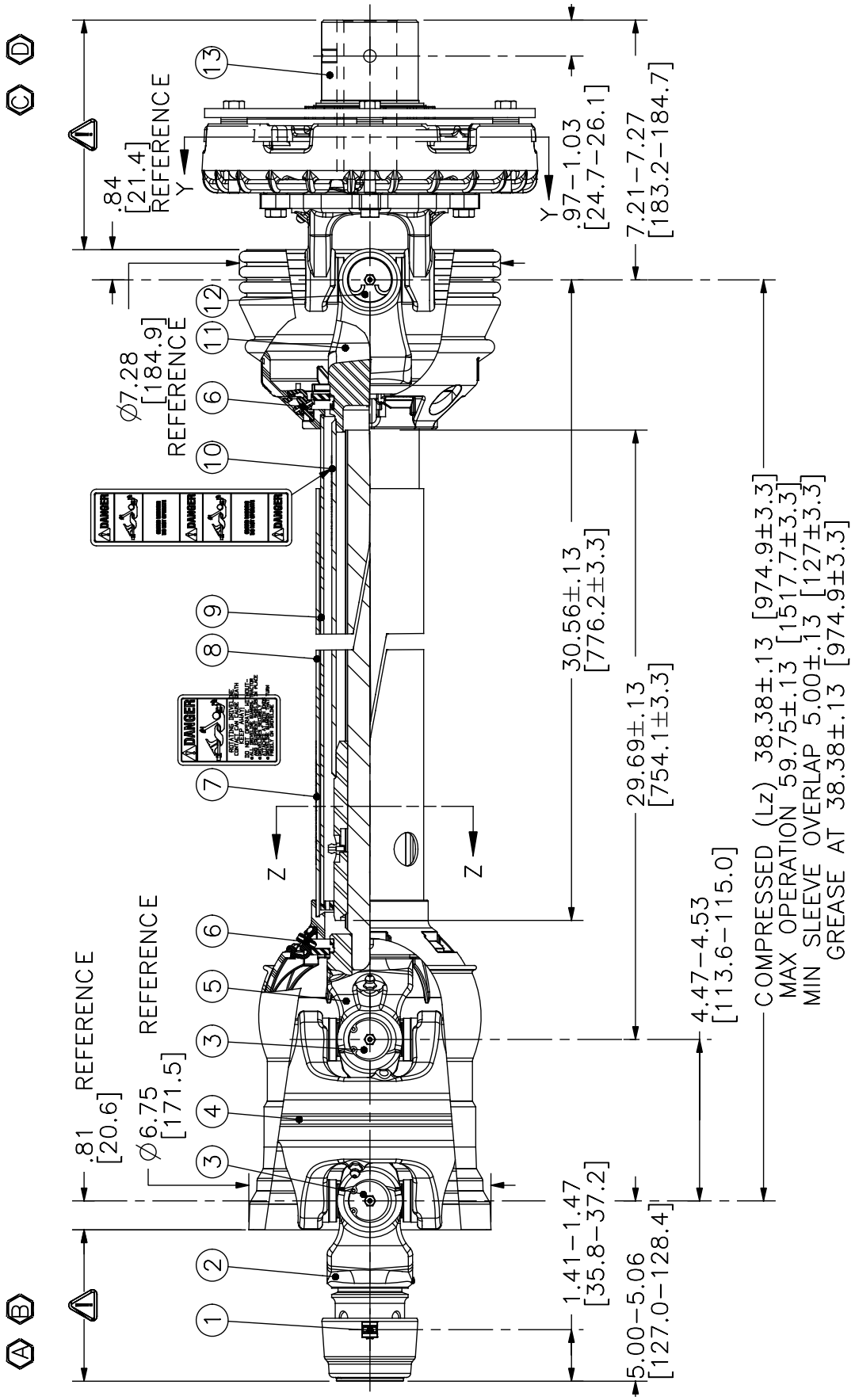

ITEM NO.	PART NUMBER	DESCRIPTION	QTY.
A	H93-25415	JOINT & SHAFT HALF ASM. W/GUARC	1
B	H95-25415	JOINT IJC SHAFT HALF ASM.	1
C	H92-25415	JOINT & TUBE HALF ASM. W/GUARD	1
D	H94-25415	JOINT & TUBE HALF ASM.	1
1	H26-15120	SSL/AUTO-LOK REPAIR KIT	1
2	H86810-1016	WWCV AUTO-LOK YOKE ASM.	1
3	H03-15436	AB6/AW22/CAT 4 80-EBL CROSS KIT	2
4	H26-15159	WWCV CENTER HOUSING	1
5	H99-25415	WWCV YOKE ST SHAFT (1.31-20 SPINE)	1
6	H19-15126	GUARD REPAIR KIT	2
7	H13-10021	SAFETF SIGN	1
8	H97-25415	OUTER GUARD	1
9	H96-25415	INNER GUARD	1
10	H13-10022	SAFETT SIGN	1
11	H98-25415	YOKE. TUBE, & SUP SLEEVE	1
12	H03-15287	35EBL CROSS KIT	1
15	H38-15088	FRICTION CLUTCH ASM.	1

1000 RPM 1-3/4 X 20 SPLINE C-V PTO W/CLUTCH PACK

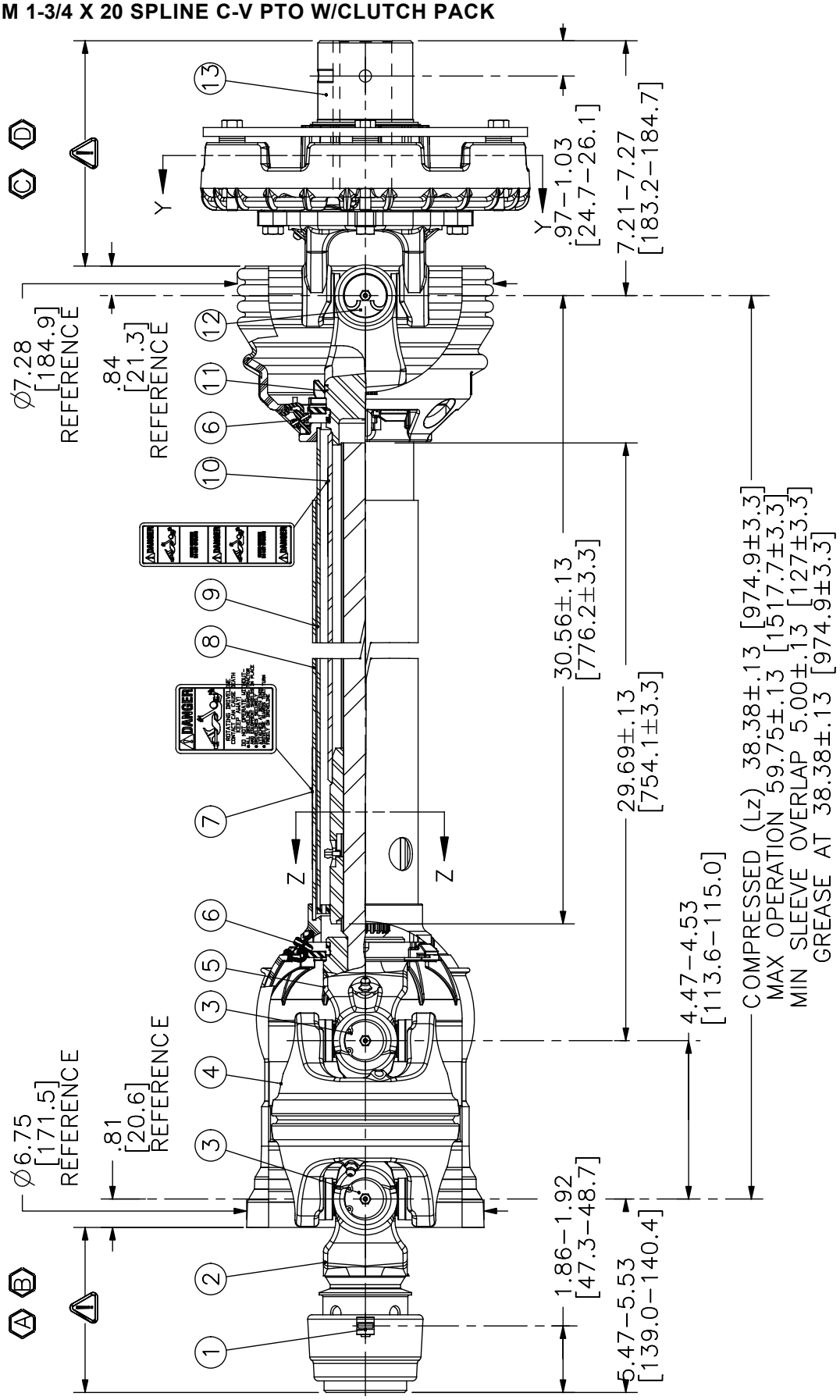

ITEM NO.	PART NUMBER	DESCRIPTION	QTY.
A	H93-26285	JOINT & SHAFT HALF ASM. W/GUARC	1
B	H95-26285	JOINT & SHAFT HALF ASM.	1
C	H92-25415	JOINT & TUBE HALF ASM. W/GUARD	1
D	H94-25415	JOINT & TUBE HALF ASM.	1
1	H26-13387	SSL/AUTO-LOK REPAIR KIT	1
2	H86810-1038	WWCV AUTO-LOK YOKE ASM.	1
3	H03-15436	A86/AW22/CAT 4 80-EBL CROSS KIT	2
4	H26-15159	WWCV CENTER HOUSING	1
5	H99-25415	VWCV YOKE & SHAFT (1.31-20 SPINE)	1
6	H19-15126	GUARD REPAIR KFT	2
7	H13-10021	SAFETT SIGN	1
8	H97-25415	OUTER GUARD	1
9	H96-25415	INNER GUARD	1
10	H13-10022	SAFETT SIGN	1
11	H98-25415	YOKE. TUBE. & SLIP SLEEVE	1
12	H03-15287	35EBL CROSS KIT	1
13	H38-15088	FRICTION CLUTCH ASM.	1

MAIN FLOOR ASSEMBLY

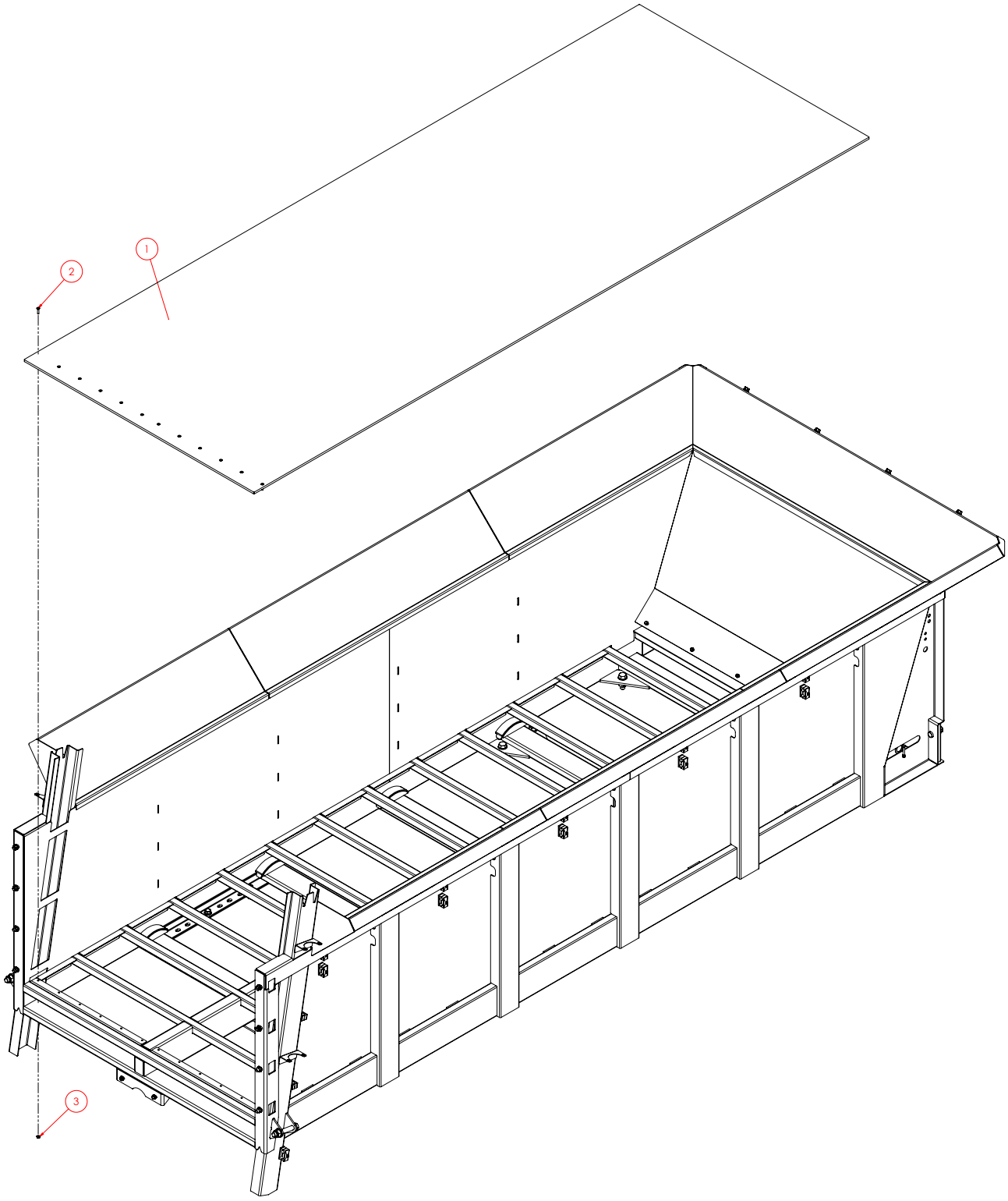

ITEM NO.	PART NUMBER	DESCRIPTION	QTY.
1	596820	PLASTIC FLOOR, MAIN	1
2	MP907624	SCREW - FHSCS 5/16-18 X	12
3	600110	NUT, HFH NYLOC 5/16-18	12

REAR GANG TO BOX ASSEMBLY

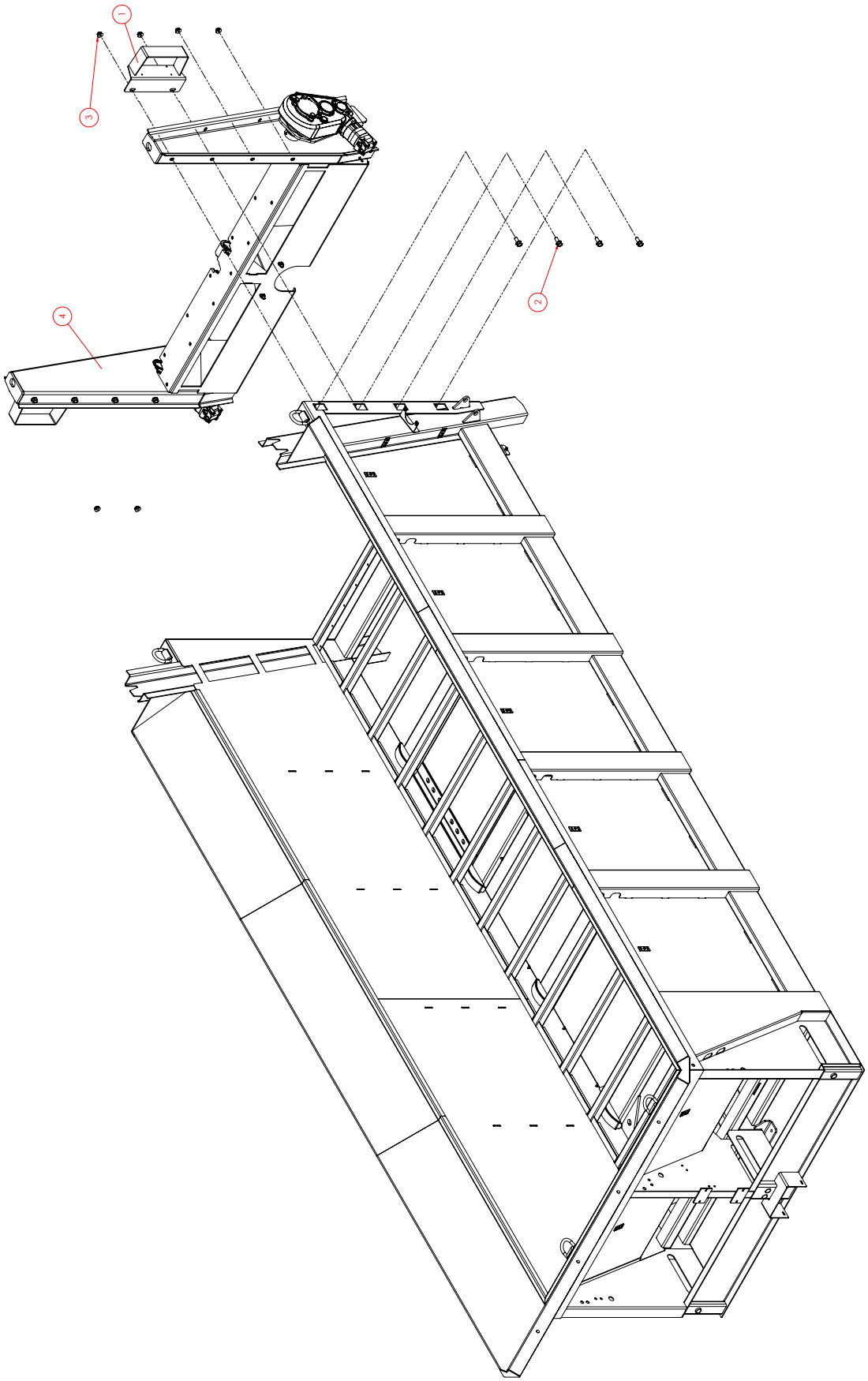

ITEM NO.	PART NUMBER	DESCRIPTION	QTY.
1	H160074	LIGHT BRACKET	2
2	600210	BOLT, HFH 5/8-11	8
3	600150	NUT, HFH NYLOC 5/8-11	8
4	690775	REAR GANG WELDMENT,	1

REAR GANG ASSEMBLY

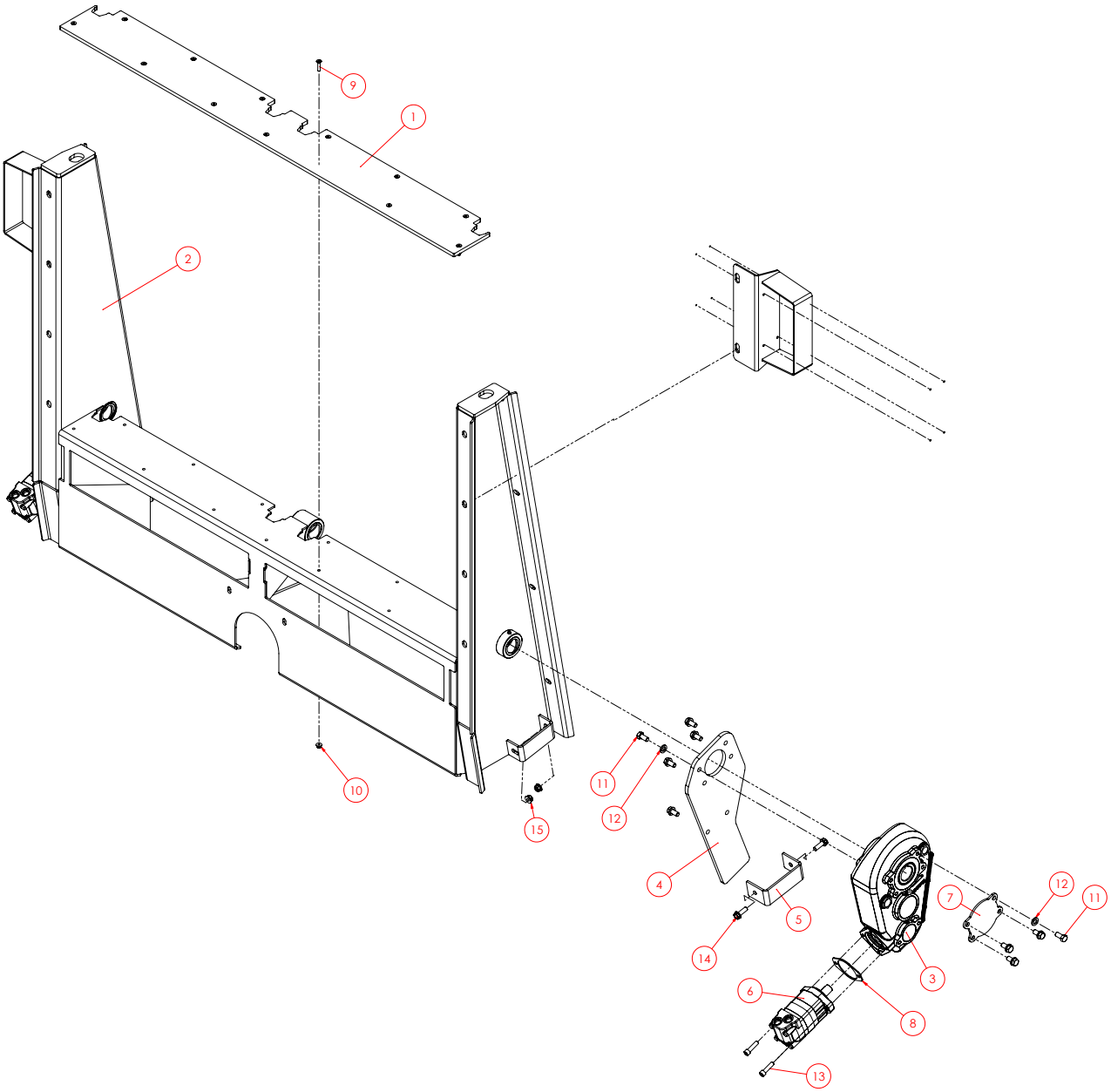

ITEM NO.	PART NUMBER	DESCRIPTION	QTY.
1	596840	PLASTIC FLOOR, REAR	1
2	690775	REAR GANG WELDMENT,	1
3	HO74-01-5069	GEARBOX, RIGHT ANGLE	2
4	H15560	TORQUE PLATE	2
5	H610131	BRACKET, U	2
6	HC47-00-3122	MOTOR, HYD	2
7	598420	END PLATE, GEARBOX	2
8	H610132	MOTOR SHIM PLATE	2
9	MP907624	SCREW - FHSCS 5/16-18 X	13
10	600110	NUT, HFH NYLOC 5/16-18	13
11	H4138	BOLT, HHCS M14-2 X 30 GR8.8 ZN	20
12	020440	WASHER, LOCK 5/8	20
13	HZ86-11-1245	SHCS, M12-1.75 X 45	4
14	600580	BOLT, HFH 1/2-13	4
15	600140	NUT, HFH NYLOC 1/2-13	4

GEARBOX ASSEMBLY

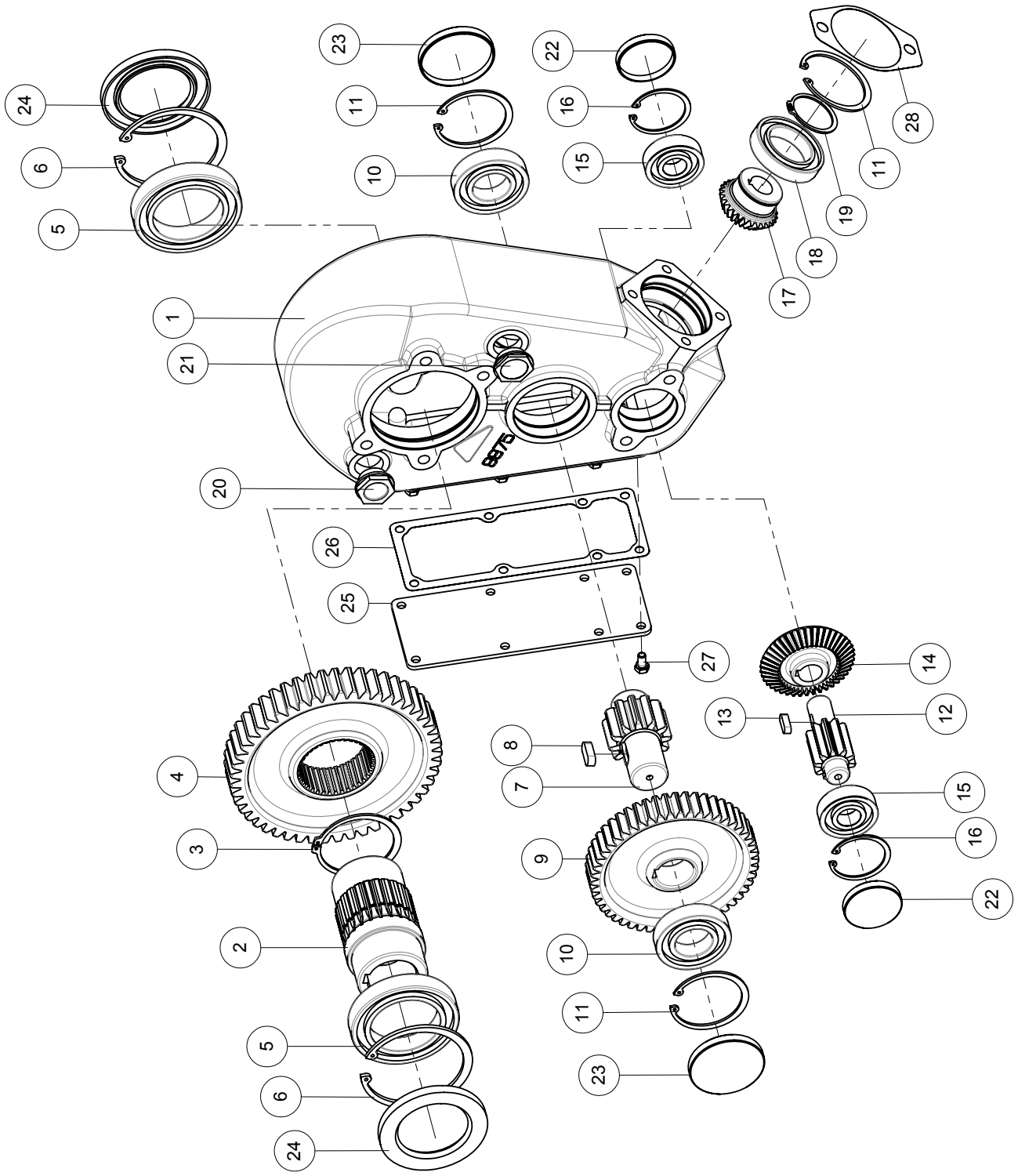

ITEM NO.	PART NUMBER	DESCRIPTION	QTY.
1	H9975	HOUSING RT350	1
2	H14551	HUB Ø2"	1
3	H9918	CIRCLIP E 82	1
4	H9974	GEAR Z=49	1
5	H9982	BEARING 6015	2
6	H9984	CIRCLIP I 115	2
7	H8670-5	PINION Z=12	1
8	H4174	KEY 12X8X30	1
9	H8670-4	GEAR Z=50	1
10	H3342	BEARING 6208	2
11	H3435	CIRCLIP I 80	3
12	H8670-3	PINION Z=10	1
13	H3396	KEY 8X7X25	1
14	H8670-2	GEAR Z=43	1
15	H8596	BEARING 6305	2
16	H3433	CIRCLIP I 62	2
17	H9923	PINION Z=28	1
18	H1538	BEARING 6010	1
19	H3428	CIRCLIP E 50	1
20	H9175	OIL BREATHER PLUG Ø1"GAS	2
21	H1831	OIL LEVEL INDIC. Ø1"GAS	2
22	H8625	PLUG Ø62	2
23	H8243	PLUG Ø80	2
24	H9983	OIL SEAL 75/115/10	2
25	H9976	COVER	1
26	H9977	GASKET	1
27	H3284	SCREW,HEX-HD M8X16	8
28	H610132	GASKET	1

APRON CHAIN AND DRIVE ASSEMBLY

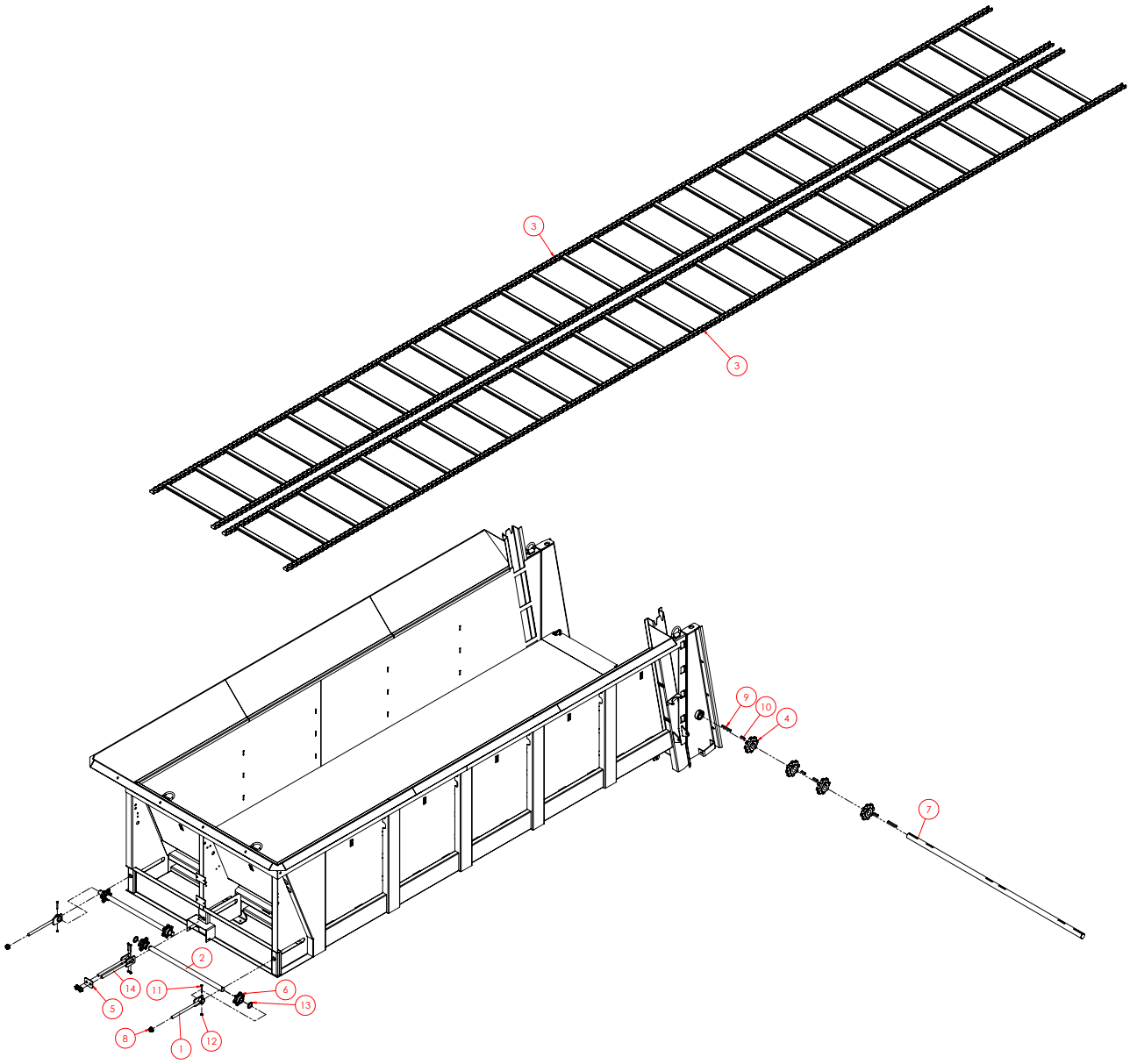

ITEM NO.	PART NUMBER	DESCRIPTION	QTY.
1	H610206	OUTSIDE APRON TIGHTENER	2
2	H140003	APRON IDLER SHAFT	2
3	690730	APRON CHAIN WLDT, COMPLETE	2
	690731	APRON CHAIN WLDT, SERVICE (10 LINKS, 2 SLATS)	-
	690732	APRON CHAIN WLDT, SERVICE (2 LINKS, 1 SLAT)	-
	690847	APRON CHAIN SLAT (WELD IN)	-
	634275	CONNECTING LINK	-
	034360	COTTER PIN FOR CONNECTING LINK	-
4	HM08-56-3077	SPROCKET, 667X 8T	4
5	H160024	CENTER TENSIONER PLATE	1
6	H200074	6-TOOTH IDLER SPRKT	4
7	690831	REAR APRON SHAFT,	1
8	600510	NUT, HFH NYLOC 7/8-9	4
9	P10045	KEY, SQ 1/2"X4-3/8"	2
10	R66305	KEY, SQUARE 1/2" X 2"	4
11	990820	BOLT, HHCS 3/8-16 X 3	4
12	073630	NUT, LOCK 3/8-16	4
13	I49581089	WASHER, FLAT	4
14	H610203	INSIDE APRON TIGHTENER	2
CONNECTING LINKS AND COTTER PINS INCLUDED WITH COMPLETE AND SERVICE CHAINS. COMPLETE APRON CHAIN NOT ELIGBLE FOR IMMEDIATE WARRANTY SERVICE.			

SLOP GATE ASSEMBLY

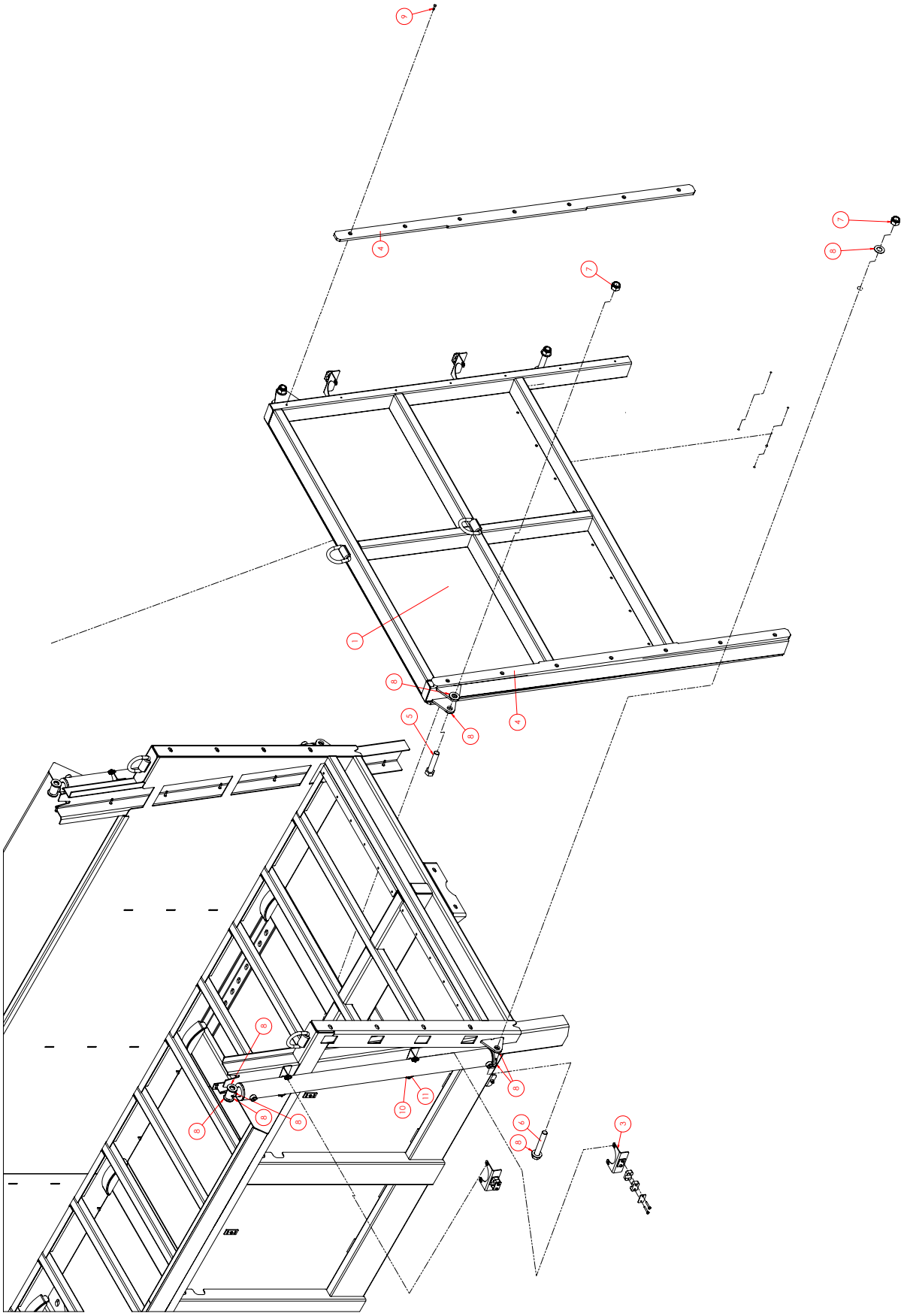

ITEM NO.	PART NUMBER	DESCRIPTION	QTY.
1	690720	SLOP GATE WELDMENT,	1
2	660580	CYLINDER, HYD (CHIEF)	2
	660585	CYLINDER, HYD (PRINCE)	
3	690765	CYLINDER HOLDER WLDMNT	4
4	660595	PLASTIC SLIDE,	3
5	991060	BOLT, HHCS 1-8 X 5	2
6	600490	BOLT, HHCS 1-8 X 6.00, GR8, ZINC	2
7	MP09.70791	NYLON INSERT LOCKNUT, 1-8 UNC	4
8	1107389	WASHER, FLAT 1 SAE	20
9	660570	1/4" BLIND RIVET	28
10	600050	BOLT, HFH 3/8-16 X 1.00"	8
11	600120	NUT, HFH NYLOC 3/8-16	8
DO NOT MIX CHIEF AND PRINCE CYLINDERS USE PAIR OF EITHER OR			

BEATER TO BOX ASSEMBLY

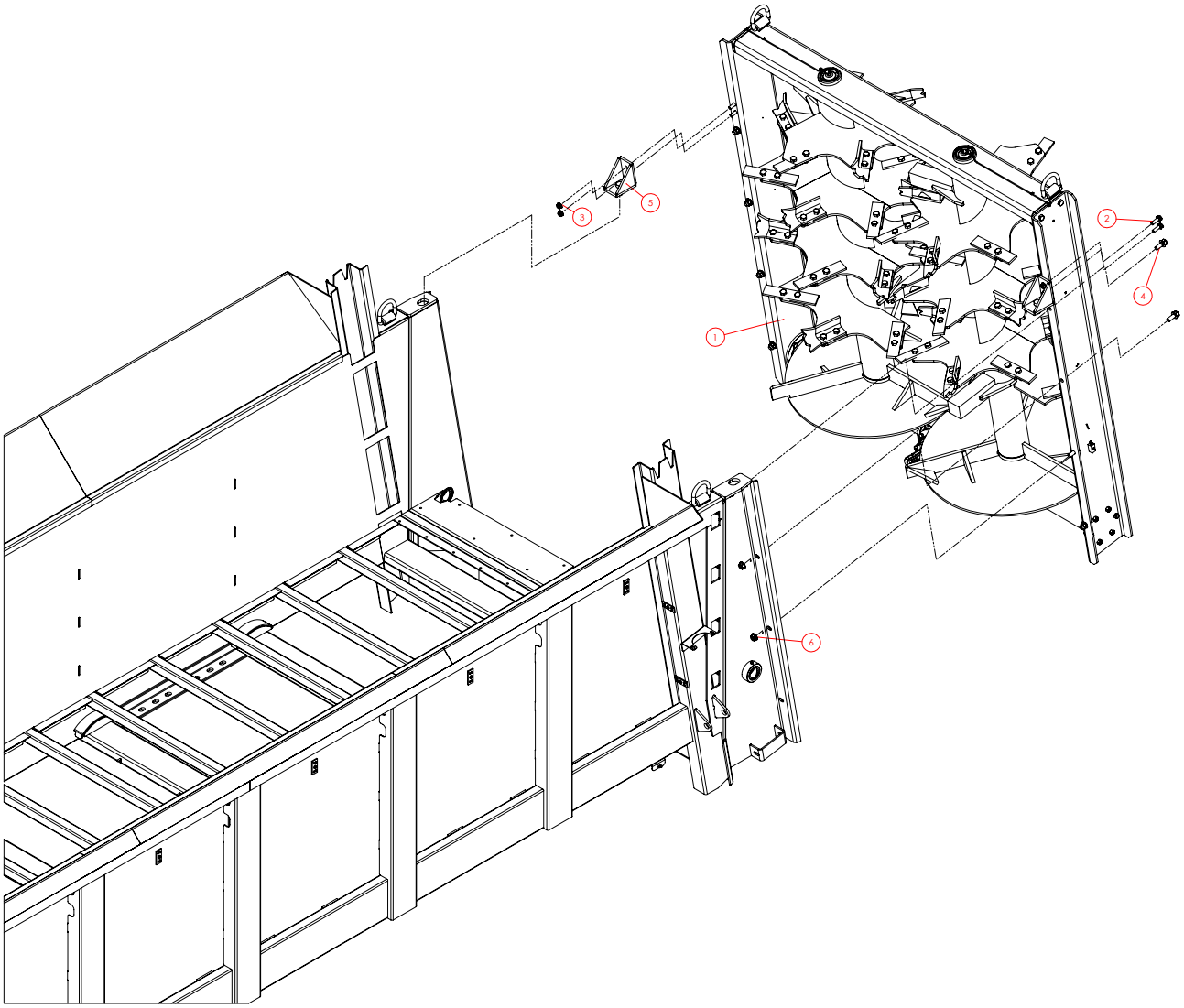

ITEM NO.	PART NUMBER	DESCRIPTION	QTY.
1	H140503	V140 BTRS W/HOOKS	1
2	600580	BOLT, HFH 1/2-13	4
3	600140	NUT, HFH NYLOC 1/2-13	4
4	600210	BOLT, HFH 5/8-11	8
5	H200234	BEATER LOCATOR	2
6	600150	NUT, HFH NYLOC 5/8-11	8

BEATERS ASSEMBLY

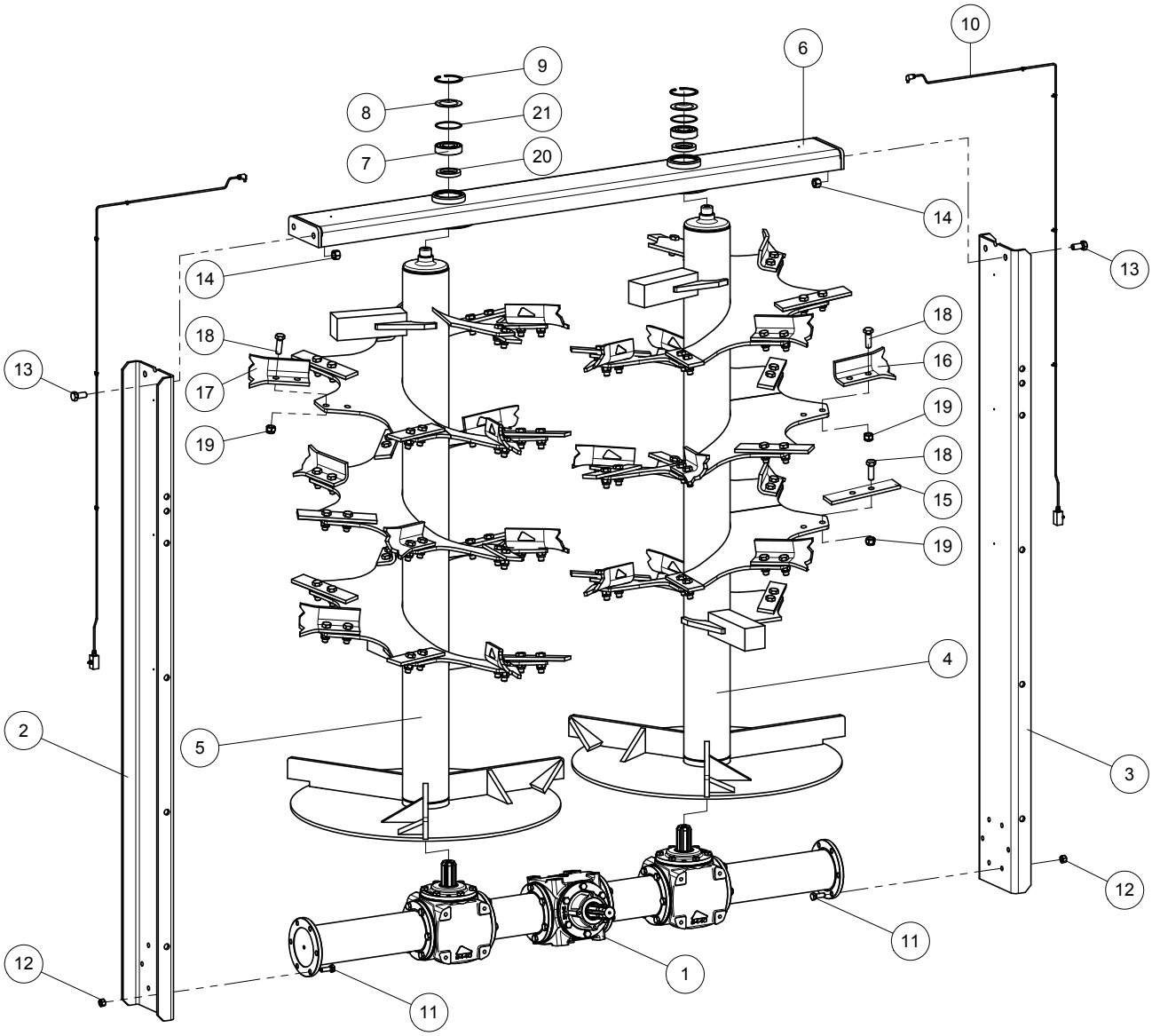

ITEM NO.	PART NUMBER	DESCRIPTION	QTY.
1	H14936 [PG. 70]	GEAR BOX SRT8/1830/820-RO	1
2	H14944	RIGHT PANEL	1
3	H14945	LEFT PANEL	1
4	H14946	RIGHT BEATER	1
5	H14947	LEFT BEATER	1
6	H14950	CROSS BAR	1
7	H3340	BEARING 1307 E	2
8	H7724	COVERPLATE	2
9	H3435	CIRCLIP I 80	2
10	H14952	LUBRIFICATION KIT	1
11	H3768	SCREW,HEX-HD M12X35	12
12	H4478	NUT M12	12
13	H8940	SCREW, HEX-HD M16X35	4
14	H3690	NUT M16	4
15	H9569	KNIFE	24
16	H14626	RIGHT BLADE	11
17	H14627	LEFT BLADE	11
18	H9802	SCREW, HEX-HD M16X1.5X50	92
19	H9113	NUT M16X1.5	92
20	H7331	OIL SEAL 45/72/10	2
21	H3462	O-RING 176	2

BEATER GEARS ASSEMBLY

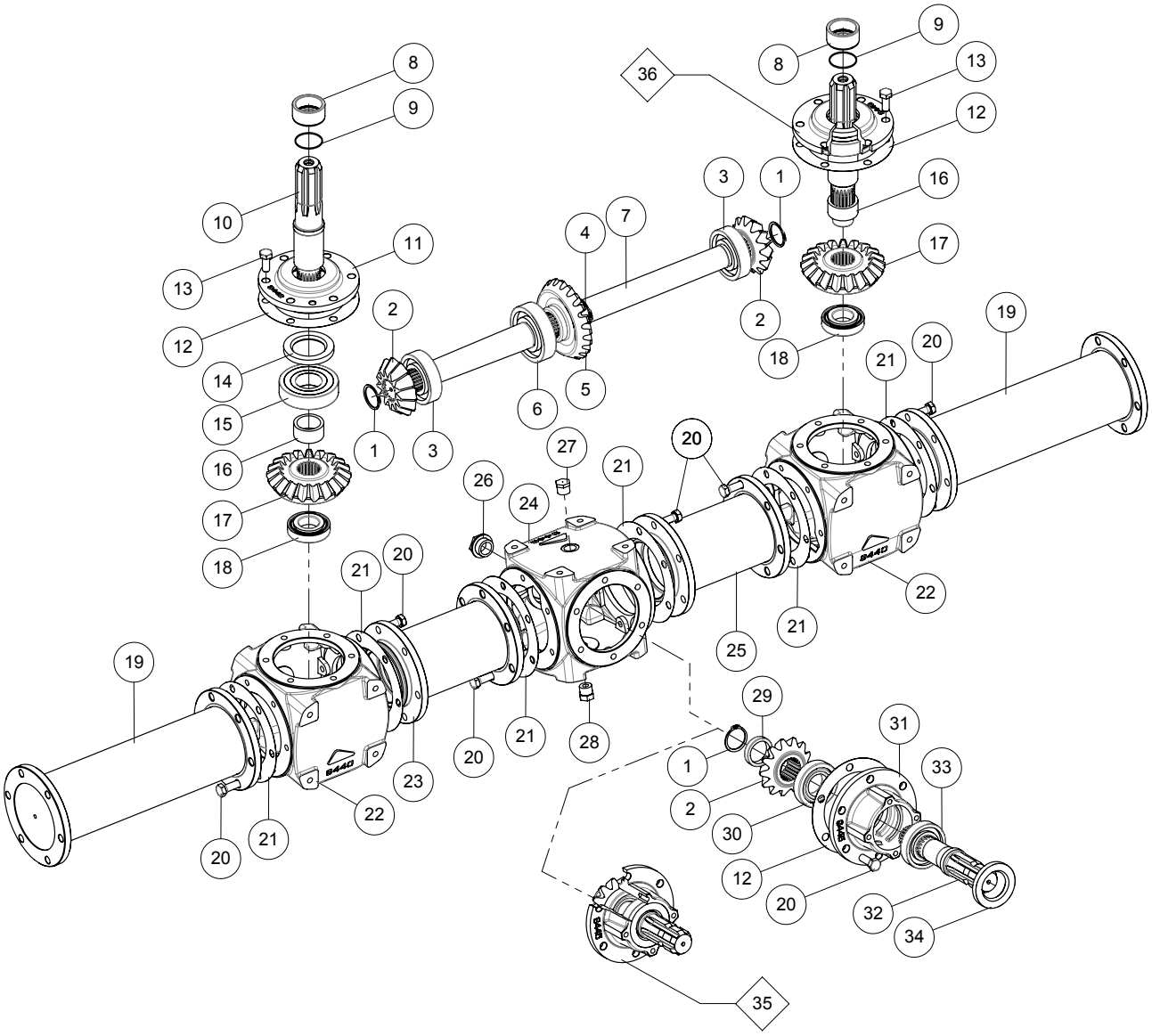

ITEM NO.	PART NUMBER	DESCRIPTION	QTY.
1	H3426	CIRCLIP E 40	3
2	H9476	PINION Z=13	3
3	H3346	BEARING 6308	2
4	H3427	CIRCLIP E 45	1
5	H9502	GEAR Z=20	1
6	H7478	BEARING 6309	1
7	H14937	SHAFT	1
8	H9524	SPACER	2
9	H9926	O-RING 2175	2
10	H9507	SHAFT	2
11	H9446	CALOTTE	2
12	H9536	GASKET	3
13	H3302	SCREW, HEX-HD M12X30	12
14	H7480	OIL SEAL 55/85/10	2
15	H13102	BEARING 6309-2RS	2
16	H9516	SPACER 40/51/25	2
17	H9477	GEAR Z=20	2
18	H3354	BEARING 30207	2
19	H14940	SPACER L=404.75	2
20	H3768	SCREW, HEX-HD M12X35	42
21	H9525	GASKET	6
22	H9441	HOUSING	2
23	H14938	SPACER L=209.65	1
24	H9440	HOUSING	1
25	H14939	SPACER L=209.65	1
26	H9179	OIL LEV. INDICATOR Ø1"GAS	1
27	H9706	PLUG Ø1/2"GAS	1
28	H9707	OIL PLUG 1/2"GAS	1
29	H12629	SPACER	1
30	H4910	BEARING 30208	1
31	H9445	HUB	1
32	H9509	SHAFT	1
33	H3342	BEARING 6208	1
34	H9537	OIL SEAL 48/80/10	1
35	H12150	HUB COMPLETE	1
36	H9539	CALOTTE COMPLETE	2

ROCK GAURD ASSEMBLY

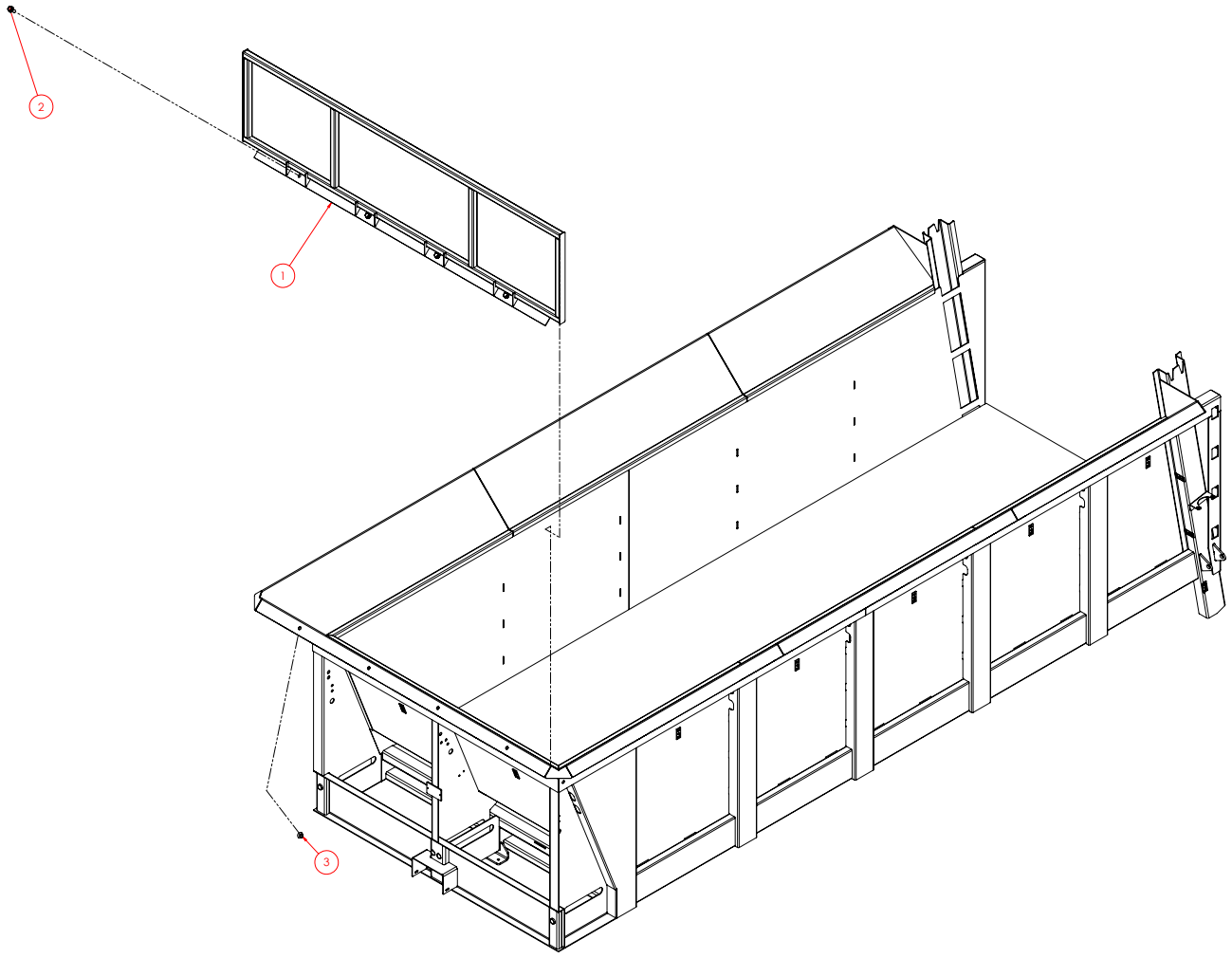

ITEM NO.	PART NUMBER	DESCRIPTION	QTY.
1	690755	ROCK GUARD WELDMENT,	1
2	600210	BOLT, HFH 5/8-11	4
3	600150	NUT, HFH NYLOC 5/8-11	4

HYDRAULIC COMPONENT ASSEMBLY

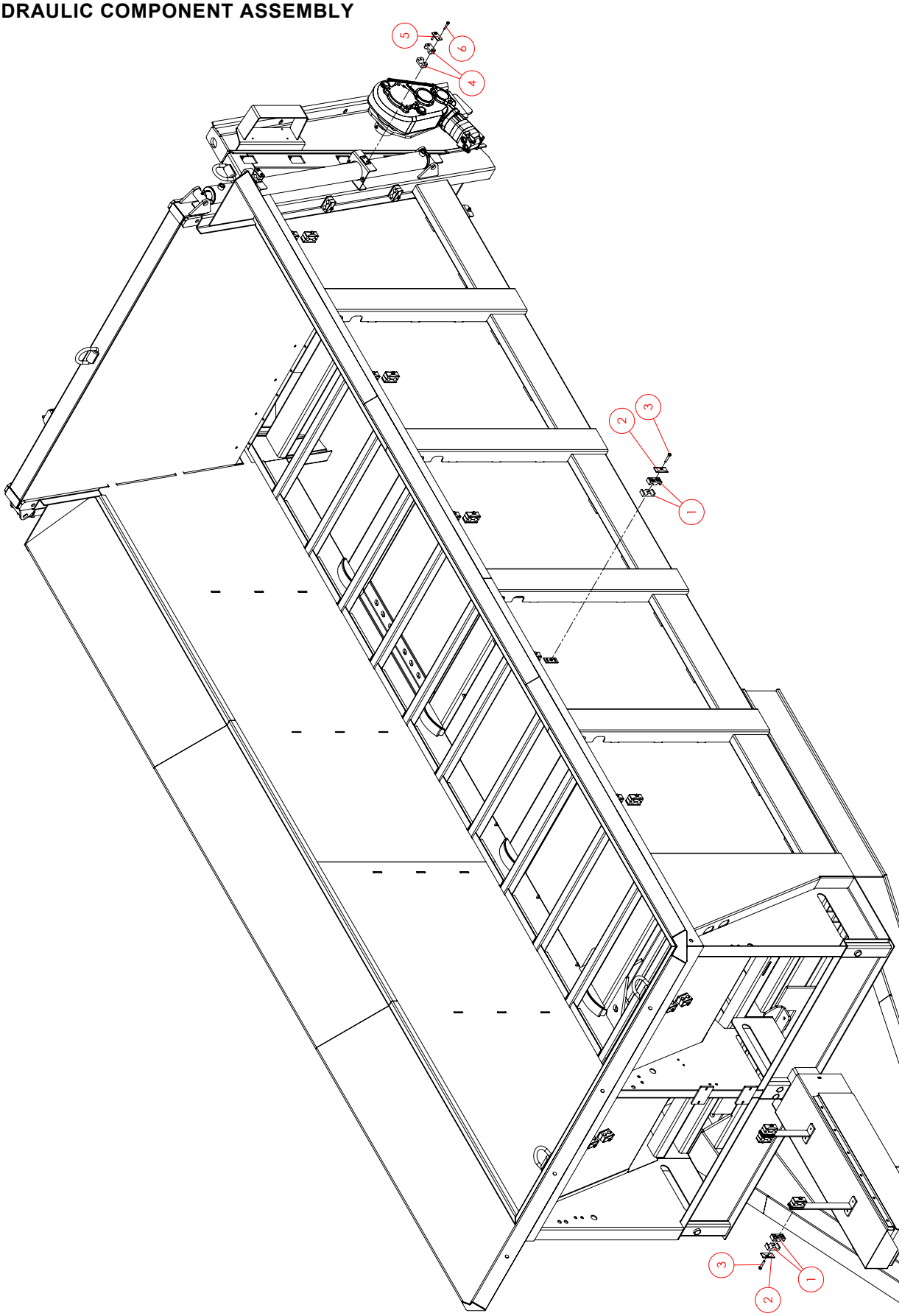

ITEM NO.	PART NUMBER	DESCRIPTION	QTY.
1	MP17.01144	SECTION, HOSE CLAMP	64
2	U51800177	TOP CAP, HOSE CLAMP	32
3	117530	BOLT, HHCS 5/16-18 X 1 3/4 GR5 ZN	32
4	HC14-00-3171	SECTION, HOSE CLAMP	8
5	HC14-00-3169	TOP CAP, HOSE CLAMP	4
6	047000	BOLT, HHCS 1/4-20 X 1-1/2	8

GREASE ASSEMBLY

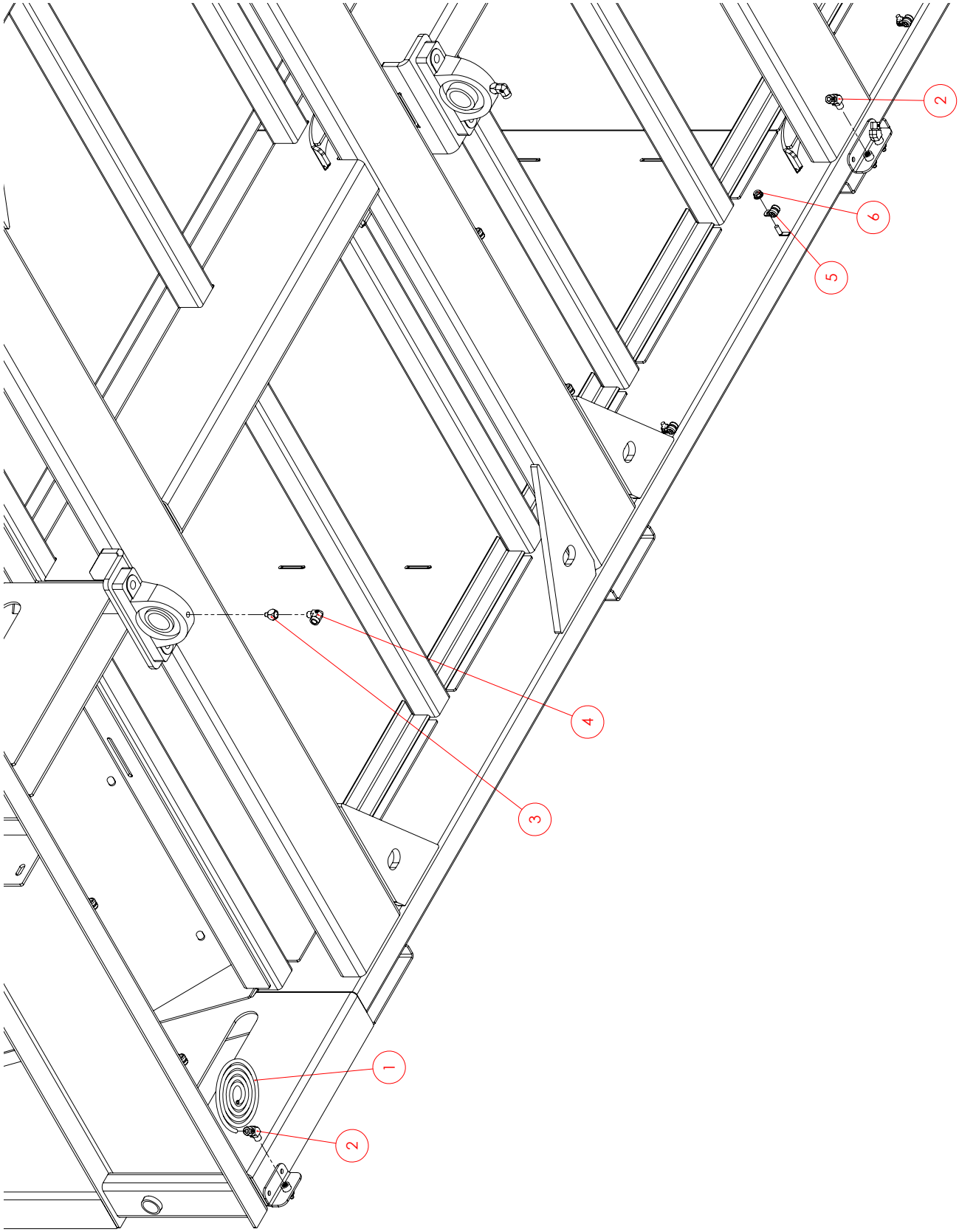

ITEM NO.	PART NUMBER	DESCRIPTION	QTY.
1	HJ40-01-0079	GREASE LINE, PREFILLED	25 FT
2	HT78-22-0204	GREASE ELBOW, 45°	4
3	244270	ADAPTER, STRAIGHT	4
4	HT78-26-0204	ELBOW, BRASS 90°	4
5	HJ14-00-0142	CLAMP, 1/4"	14
6	600100	NUT, HFH NYLOC	14

LIGHTS ASSEMBLY

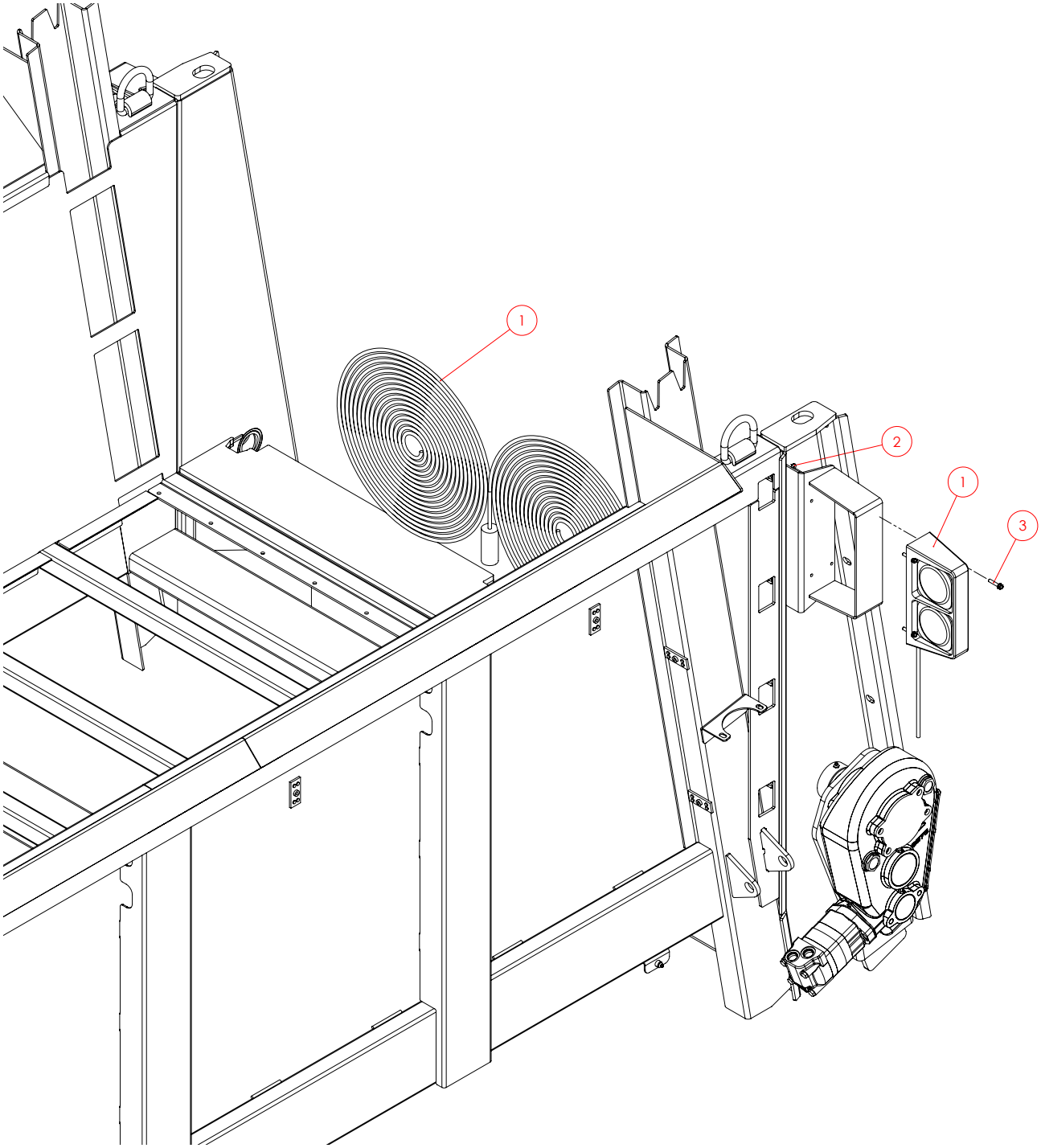

ITEM NO.	PART NUMBER	DESCRIPTION	QTY.
1	HG43-00-7269	BULB LIGHT KIT, X700	1
	690750	LED LIGHT KIT, X700	
2	600100	NUT, HFH NYLOC	8
3	600090	BOLT, HFH 1/4-20	8

BULB LIGHTS KIT

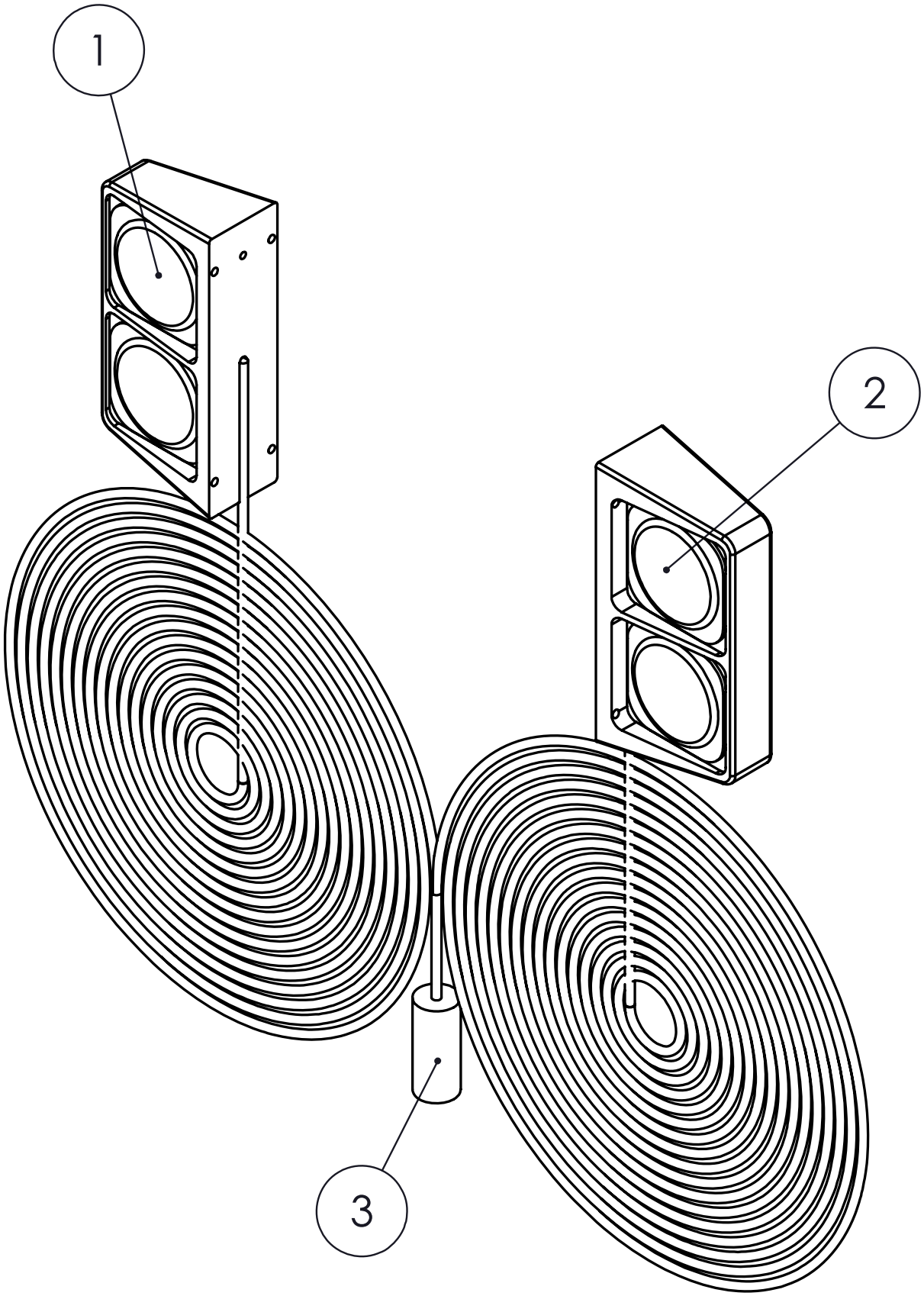

ITEM NO.	PART NUMBER	DESCRIPTION	QTY.
1	485670	LIGHT, RIGHT HAND	1
2	485660	LIGHT, LEFT HAND	1
3	485665	WIRE HARNESS, WISHBONE	1

LED LIGHTS KIT

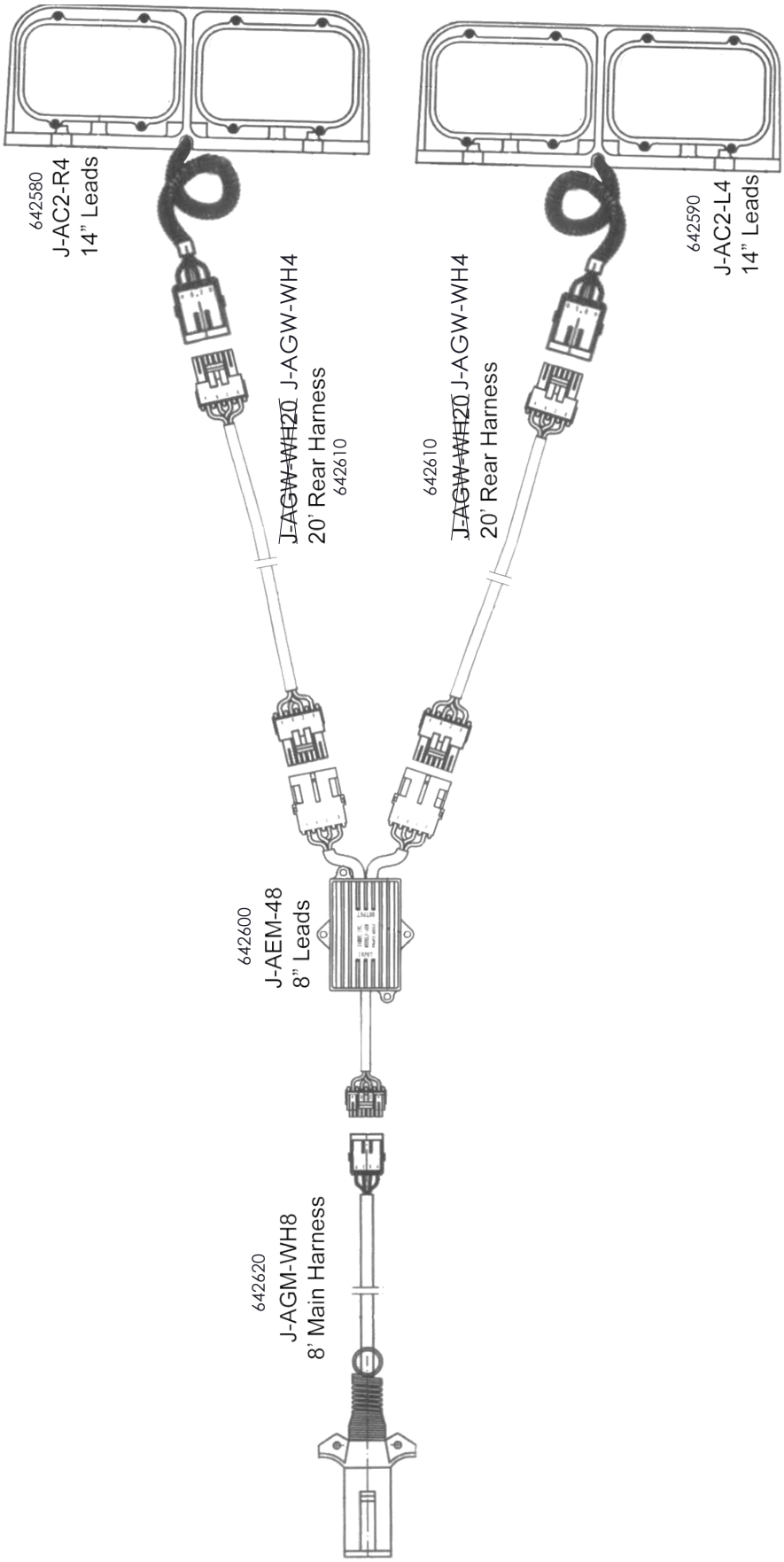

ITEM NO.	PART NUMBER	DESCRIPTION	QTY.
	642620	8’ MAIN HARNESS	1
	642600	LIGHT ENHANCER MODULE	1
	642610	20’ HARNESS	2
	642580	RH LED LIGHT	1
	642590	LH LED LIGHT	1

LED LIGHTS WIRING (OLD)

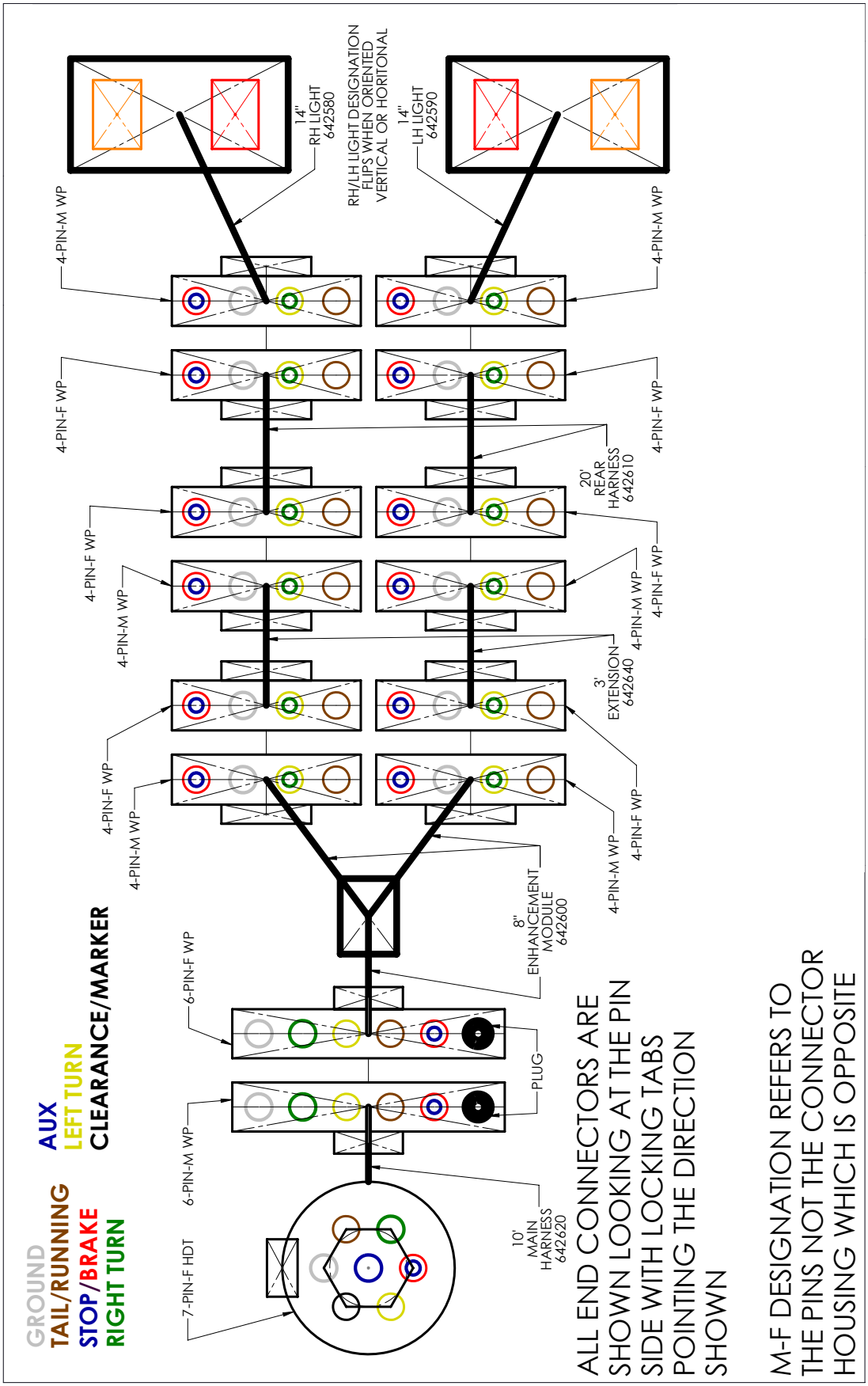

LED LIGHTS WIRING (NEW)

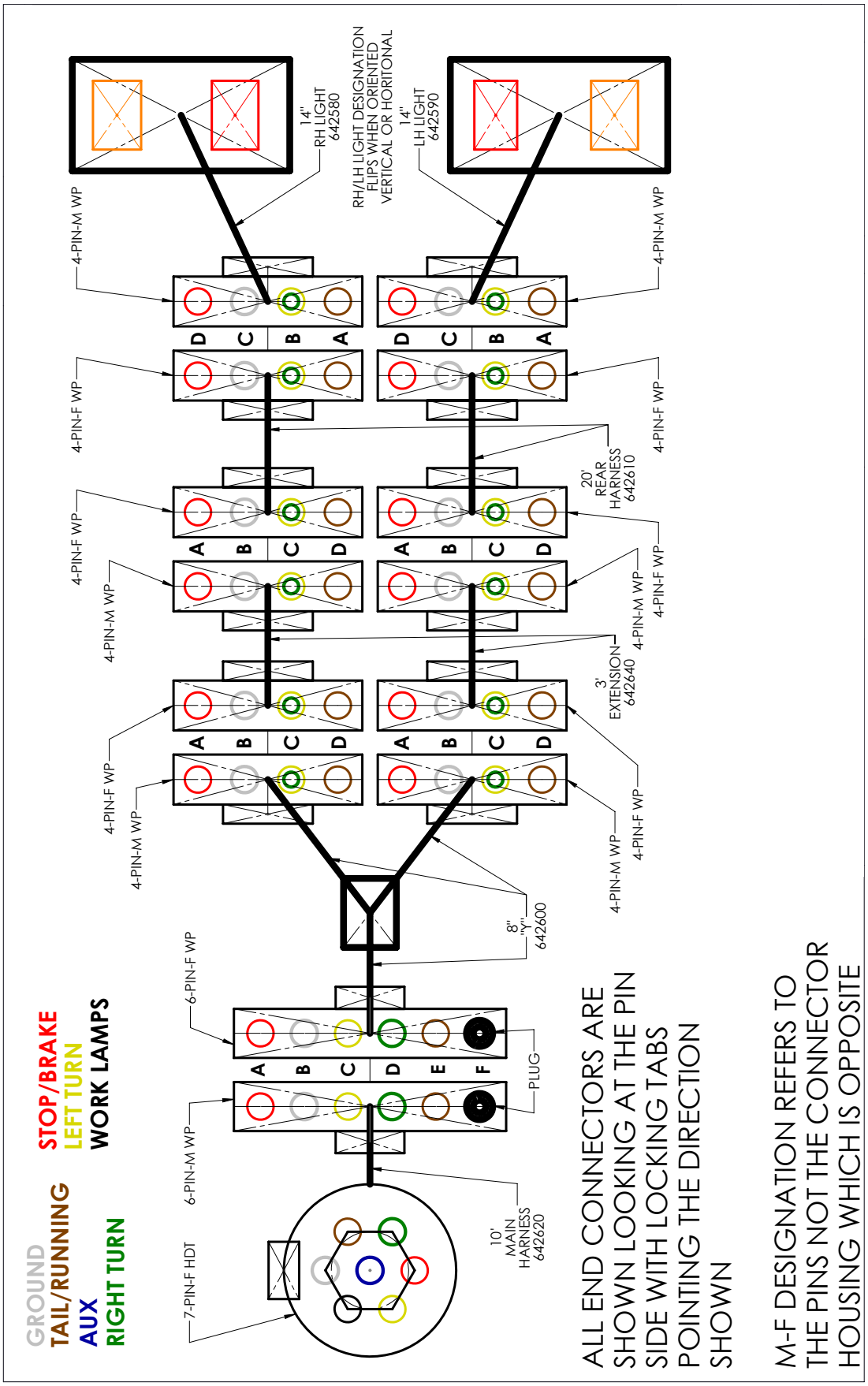

MANUAL ASSEMBLY

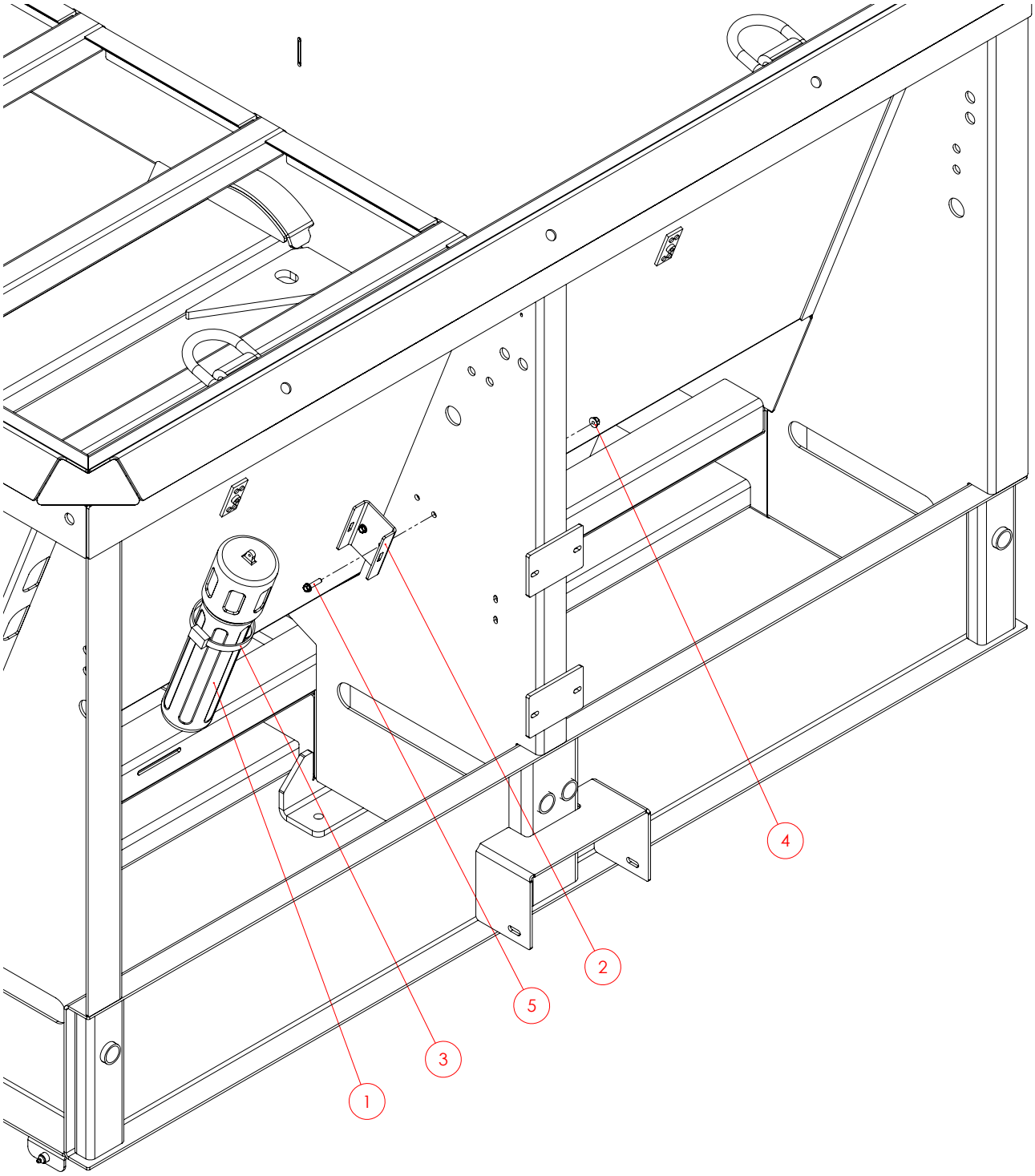

ITEM NO.	PART NUMBER	DESCRIPTION	QTY.
1	449190	TUBE, MANUAL HOLDER	1
2	458081	BRACKET, TUBE MOUNT	1
3	205920	CLAMP, 4-1/8 X 5	1
4	600100	NUT, HFH NYLOC	2
5	600020	BOLT, HFH 1/4-20 X 1.00"	2
6	690740	MANUAL	1

FLASHING ASSEMBLY

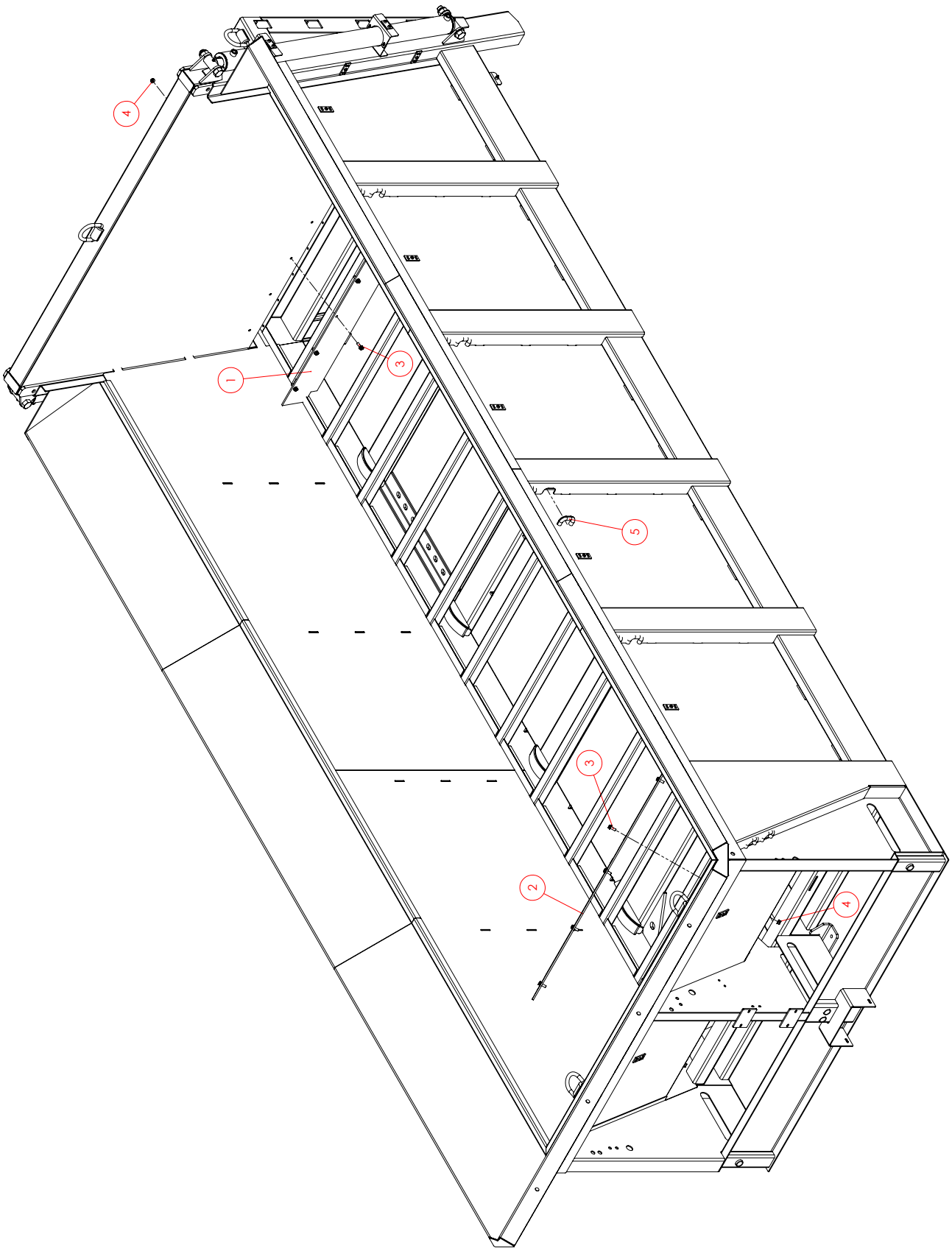

ITEM NO.	PART NUMBER	DESCRIPTION	QTY.
1	690837	SLOP GATE FLAP,	1
2	H140034	FLASHING,FRONT	1
3	600050	BOLT, HFH 3/8-16 X 1.00"	14
4	600120	NUT, HFH NYLOC 3/8-16	14
5	586050	LOOM, .5 ID X 5"	40

DECAL PLACEMENT

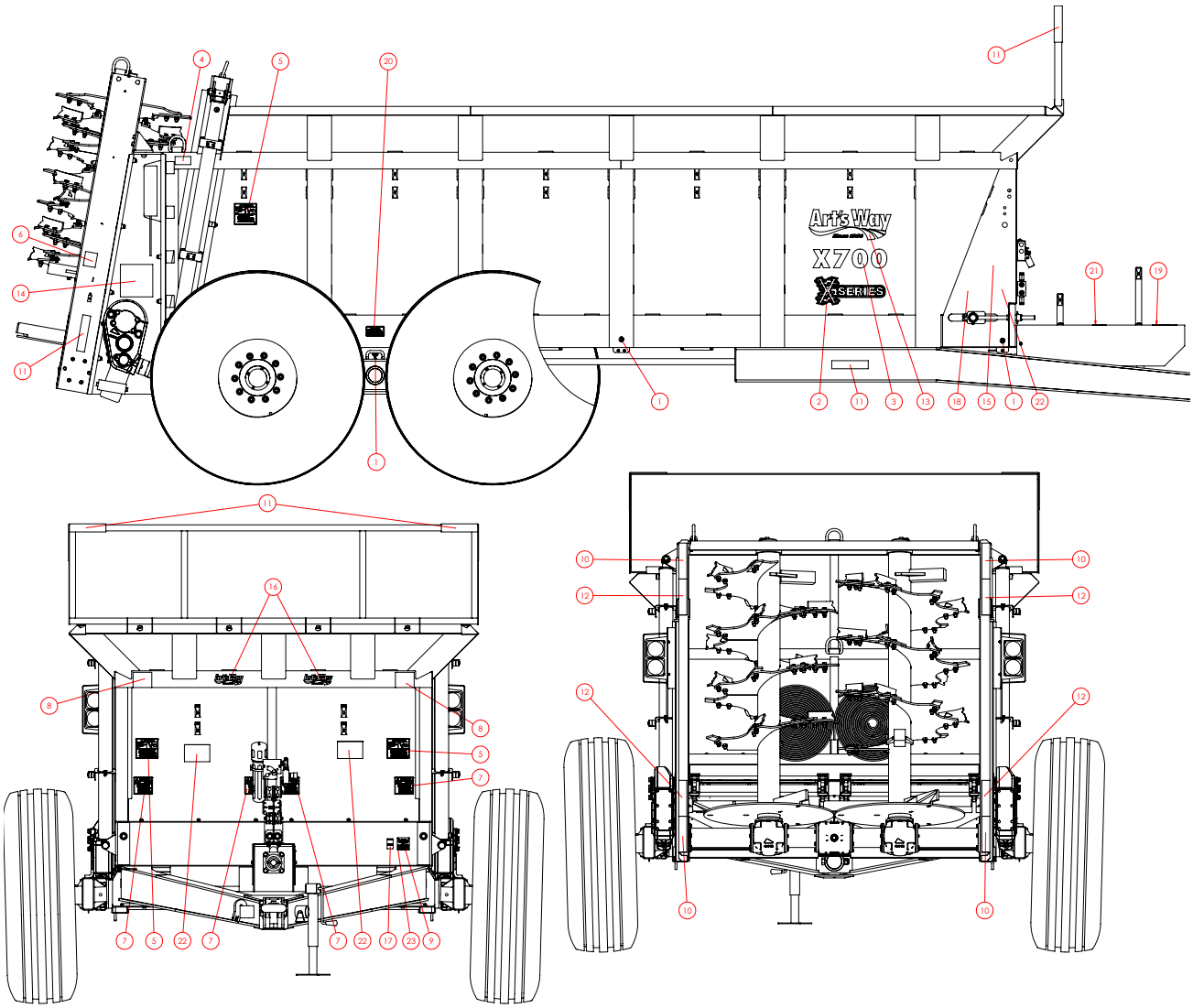

ITEM NO.	PART NUMBER	DESCRIPTION	QTY.
1	146670	DECAL, GREASE SYMBOL	5
2	690830	DECAL, "X" SERIES	2
3	690832	DECAL, X700	2
4	HJ22-00-0113	DECAL, HYDRAULIC	2
5	346310	DECAL, WARNING HIGH PRESSURE	4
6	HJ22-00-0114	DECAL, ROTATING	2
7	467450	DECAL, WARNING	4
8	HJ22-00-0091	DECAL, THROWN	2
9	355600	TAG, SERIAL NUMBER	1
10	476450	TAPE, RED RETROREFLECTIVE	4
11	476460	TAPE, YELLOW RETROREFLECTIVE	8
12	476470	TAPE, RED-ORANGE FLORESCENT	4
13	582430	DECAL, ARTSWAY	2
14	HJ22-00-0080	DECAL, DANGER	2
15	605550	ART'S WAY DECAL	2
16	582450	DECAL, ARTSWAY	2
17	K18534203	DECAL, FEMA	1
18	608080	DECAL, MADE IN AMERICA	2
19	368040	DECAL, WARNING MOVING PART	1
20	597390	DECAL, IMPORTANT	2
21	384020	DECAL, DANGER 1050 RPM	1
22	MP16.20178	DECAL, WARNING	4
23	204510	NAIL, 1/4 GRIP	4

SCALE ASSEMBLY

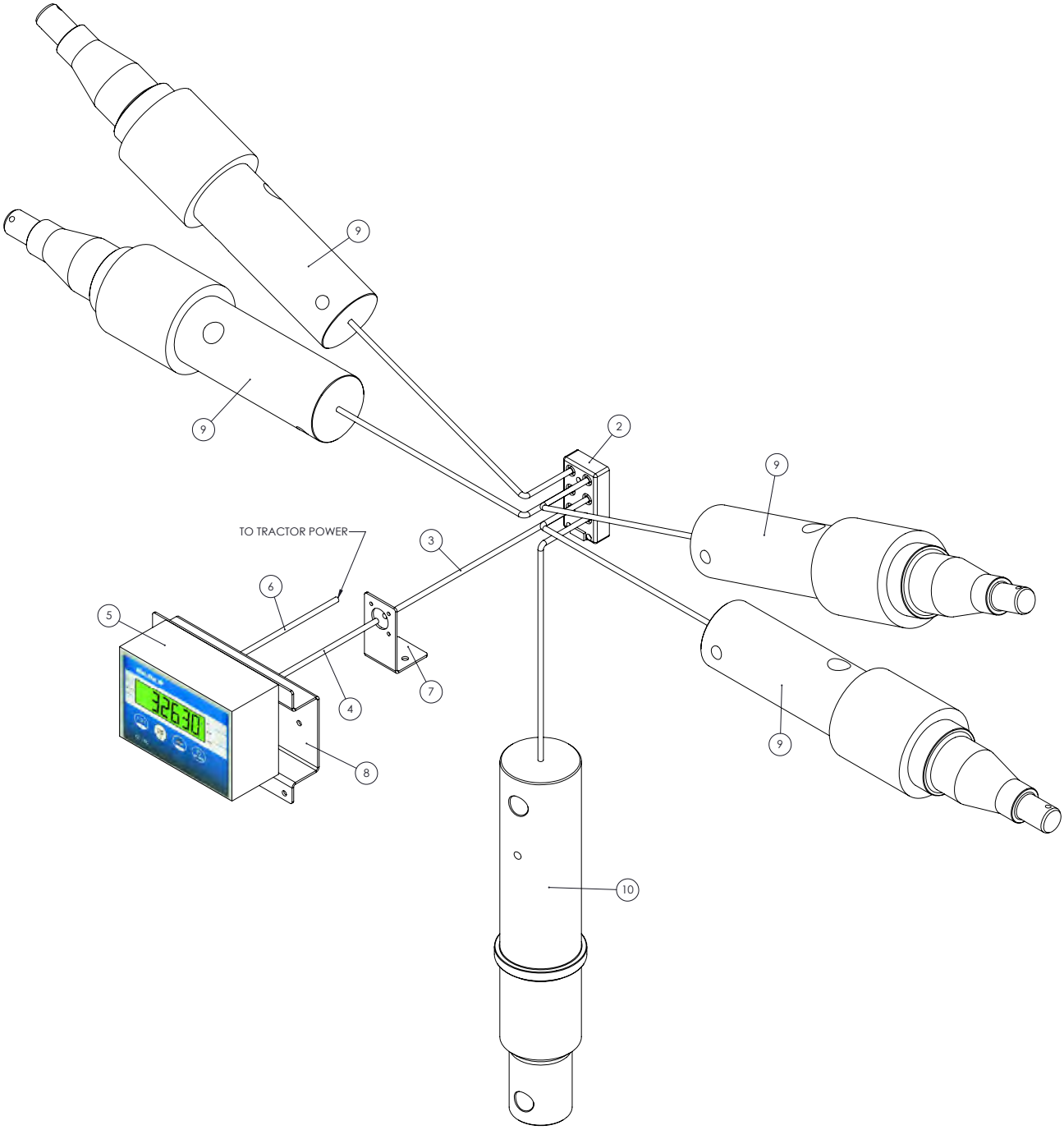

ITEM NO.	PART NUMBER	DESCRIPTION	QTY.
1	597430	407659 J-BLOCK KIT	1
2	597432	404721 J-BLOCK	1
3	597434	404722 30' CABLE	1
4	597436	141941 10' CABLE BULKHEAD	1
5	597480	405612 GT400 INDICATOR KIT	1
	597470	407746 NT460 INDICATOR KIT	
	597475	411610 NT560 INDICATOR KIT	
6	597440	146698 10' CABLE	1
7	H200126	BULKHEAD MOUNT	1
8	597450	840459 MOUNTING BRACKET	1
9	597410	408546X WEIGH SPINDLE	4
10	597420	408548 WEIGH BAR	1

APRON HYDRAULICS

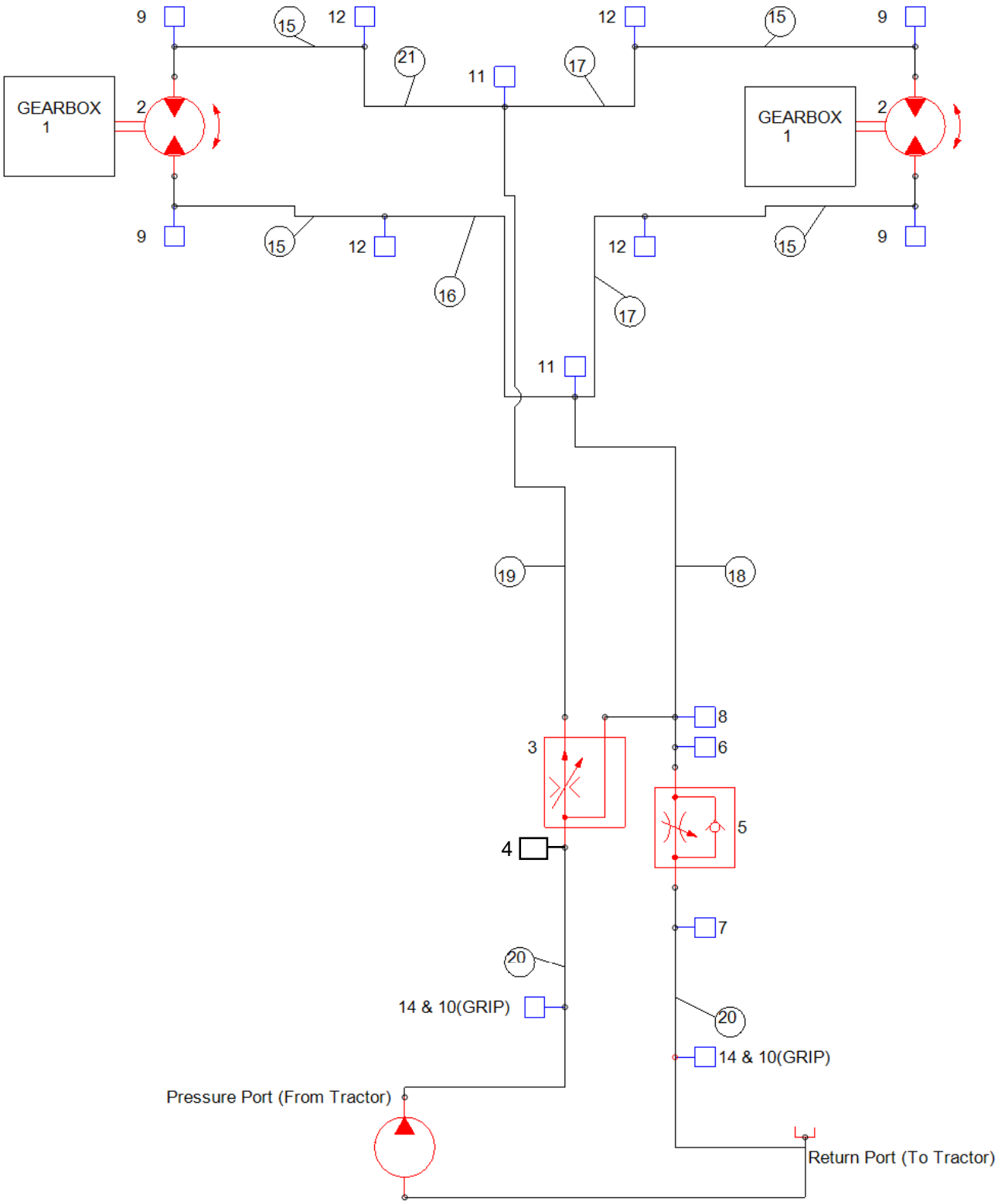

ITEM NO.	PART NUMBER	DESCRIPTION	QTY.
1	HO74-01-5069	GEARBOX, BERMA, RIGHT ANGLE	2
2	HC47-00-3122	MOTOR, HYD EATON 2000 SERIES	2
3	HC67-04-3137	FLOW CONTROL VALVE FC51-10SAE -10 ORB	1
4	MP40.00263	FITTING, HYD 45 -10M JIC X -10M ORB	1
5	HC67-04-3196	VALVE, FLOW CONTROL 3/4-NPT	1
6	HT54-45-1012	FITTING, HYD STRAIGHT -10F JIC X 3/4” M NPT	1
7	529720	FITTING, HYD STRAIGHT -10M JIC X 3/4” M NPT	1
8	MP09.74129	FITTING, HYD TEE -10M JIC (2) X -10M ORB	1
9	626825	FITTING, HYD 45 -8M JIC X -10M ORB	4
10	690610	HOSE GRIPS, BLACK PAIR	1
11	HT52-79-0808	FITTING, HYD TEE BULKH’D -8M JIC (3)	2
12	HT52-77-0808	FITTING, HYD 90 BULKHEAD -8M JIC X -8M JIC	4
13	HT52-90-0808	BULKHEAD, ADAPTER NUT 3/4-16	6
14	MP09.74158	FITTING, HYD QUICK -8F ORB X MALE QC	2
15	690867	HOSE, HYD 1/2” X 244” -8F JIC X -8F JIC	4
16	690864	HOSE, HYD 1/2” X 35” -8F JIC X -8F JIC	1
17	690866	HOSE, HYD 1/2” X 37.25” -8F JIC X -8F JIC	2
18	690862	HOSE, HYD 1/2” X 12.75” -8F JIC X -10F JIC	1
19	690863	HOSE, HYD 1/2” X 12.75” -8F JIC X -10M ORB 90	1
20	690861	HOSE, HYD 1/2” X 144” -10F JIC X -8M ORB	2
21	690865	HOSE, HYD 1/2” X 33.75” -8F JIC X -8F JIC	1

SLOP GATE HYDRAULICS

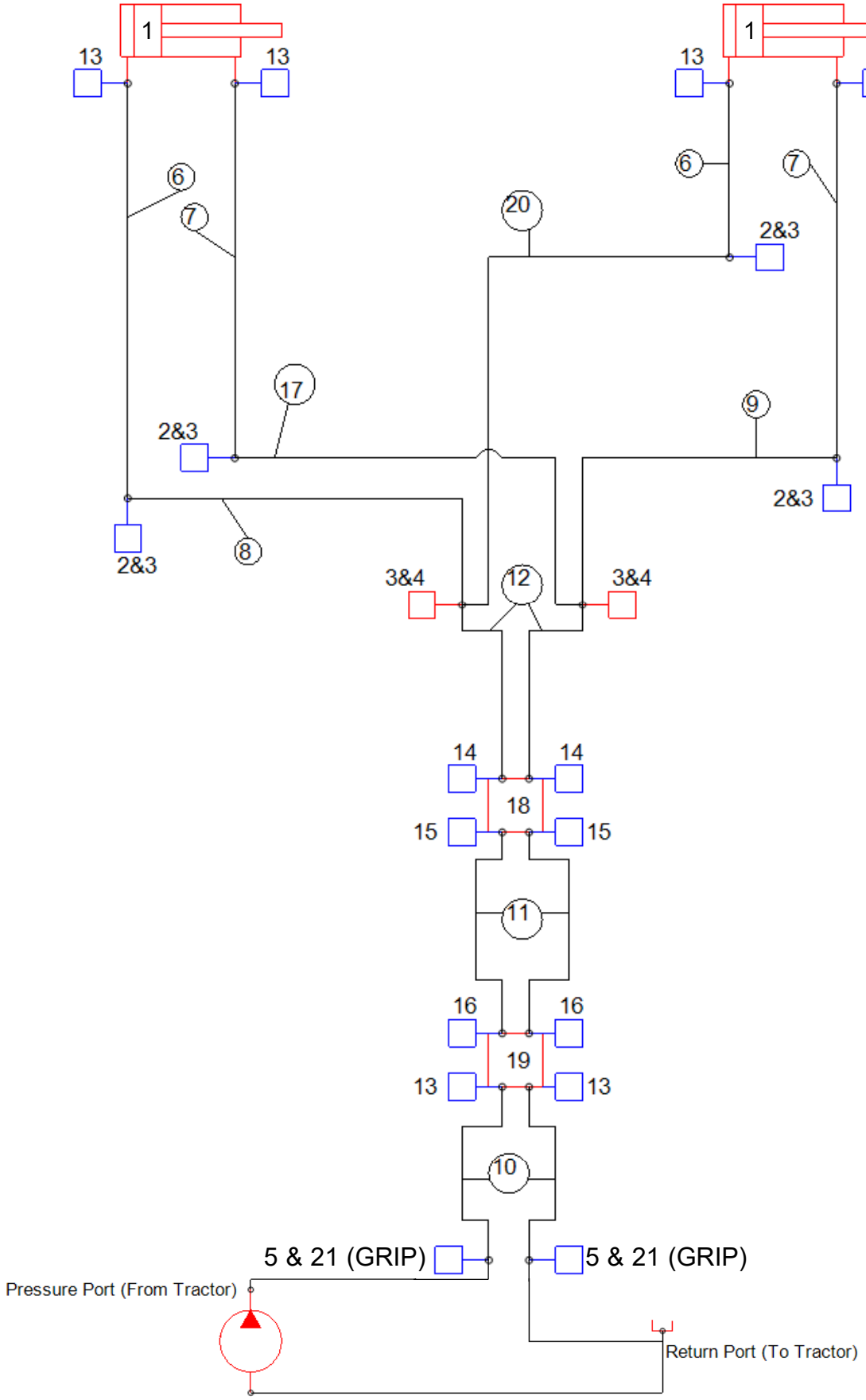

ITEM NO.	PART NUMBER	DESCRIPTION	QTY.
1	660580	3000 PSI WELDED CYLINDER	2
2	HT52-77-0606	FITTING, HYD 90 BULKHEAD -6M JIC X -6M JIC	4
3	HT52-90-0606	BULKHEAD, ADAPTER NUT 9/16-18	6
4	HT52-79-0606	BULKHEAD, RUN TEE 9/16-18 X 9/16-18 X 9/16-18	2
5	MP09.74158	FITTING, HYD QUICK -8F ORB X MALE QC	2
6	690875	HOSE, HYD 3/8” X 226” -6F JIC X -6F JIC	2
7	690876	HOSE, HYD 3/8” X 214” -6F JIC X -6F JIC	2
8	690870	HOSE, HYD 3/8” X 36.5” -6F JIC X -6F JIC	1
9	690872	HOSE, HYD 3/8” X 37.75” -6F JIC X -6F JIC	1
10	690869	HOSE, HYD 3/8” X 144” -6F JIC X -8M ORB	2
11	690877	HOSE, HYD 3/8” X 16.5” -6F JIC X -6F JIC	2
12	690874	HOSE, HYD 3/8” X 14” -6F JIC X -6F JIC	2
13	I2185128	FITTING, HYD 90 -6M JIC X -8M ORB	6
14	530240	FITTING, HYD STRAIGHT -6M JIC X -6M ORB	2
15	MP07.17946	FITTING, HYD 90 -6M JIC X -6M ORB	2
16	528160	FITTING, HYD STRAIGHT -6M JIC X -8M ORB	2
17	690871	HOSE, HYD 3/8” X 35” -6F JIC X -6F JIC	1
18	690878	BLOCK, HYD C11065	1
19	690879	BLOCK, HYD C11020-10-25	1
20	690873	HOSE, HYD 3/8” X 37” -6F JIC X -6F JIC	1
21	690611	HOSE GRIPS, GREEN PAIR	1

NOTES:

NOTES:

NOTES:

NOTES:

Art’s-Way Manufacturing Co., Inc. TECHNICAL MANUALS

Manuals are available from your local dealer or Art’s-Way Manufacturing Co., Inc. for the operation, service, and repair of your machine. For prompt convenient service, contact your local dealer for assistance in obtaining the manuals for your machine.

Your local dealer can expedite your order for operator manuals, illustrated parts catalogs, service manuals, and maintenance records.

Always give the Machine Name, Model, and Serial Number so your local dealer can provide the correct manuals for your machine.

Art’s-Way Manufacturing Co., Inc. reserves the right to make improvements in design or changes in specifications at any time without incurring any obligation to install them on units previously sold.

Except as expressly authorized, no part of this manual may be reproduced, copied, transmitted, disseminated, downloaded or stored in any storage medium, for any purpose without the express prior written consent of Art’s-Way Manufacturing Co., Inc.

ART’S-WAY MANUFACTURING CO., INC.

HWY 9 WEST - PO Box 288

Armstrong, IA. 50514 U.S.A

ART’S-WAY MANUFACTURING CO., INC.

All Rights Reserved